CHAPTER III

GRAVITY DAMS

(Revised October 2002)

Chapter III

Gravity Dams

3-0 Contents

Title		Page
3-1	Purpose and Scope	3-1
	3-1.1 General	3-1
	3-1.2 Review Procedures	3-1
3-2	Forces	3-2
	3-2.1 General	3-2
	3-2.2 Dead Loads	3-2
	3-2.3 External Water Imposed	3-2
	3-2.4 Internal Hydrostatic Loads (uplift)	3-3
	3-2.5 Earth and Silt Pressures	3-12
	3-2.6 Earthquake Forces	3-13
	3-2.7 Ice Loading	3-13
	3-2.8 Temperature and Aggregate Reactivity	3-14
3-3	Loading Combinations	3-15
	3-3.1 General	3-15
	3-3.2 Case I - Usual Loading Combination-Normal Operating Condition	3-15
	3-3.3 Case II - Unusual Loading Combination-Flood Discharge	3-15
	3-3.4 Case IIA - Unusual Loading Combination-Ice	3-15
	3-3.5 Case III - Extreme Loading Combination-Case I + Earthquake	3-15

3-4 Methods of Analysis 3-16

3-4.1 General 3-16
3-4.2 Gravity Method 3-16
3-4.3 Finite Element Methods 3-16
3-4.4 Dynamic Methods 3-20
3-4.5 Cracked Base Analysis 3-23
3-4.6 Review of Computer Analyses 3-24

3-5 Stability Criteria 3-25

3-5.1 General 3-25
3-5.2 Acceptance Criteria 3-25
3-5.3 Safety Factor Evaluation 3-29
3-5.4 Foundation Stability 3-29

3-6 Construction Materials 3-31

3-6.1 General 3-31
3-6.2 Site Investigations 3-32
3-6.3 Concrete Properties 3-32
3-6.4 Foundation Properties 3-34

3-7 References 3-37

Appendices

Appendix 3A Hydrodynamic Forces 3A
Appendix 3B Block Rocking Analysis 3B
Appendix 3C Example Problem 3C
Appendix 3D Example Seismic Analysis 3D

GRAVITY DAMS

3-1 Purpose and Scope

3-1.1 General

The objective of this chapter of the Guidelines is to provide Staff engineers, licensees, and their consultants with recommended procedures and stability criteria for use in the stability analysis of concrete gravity structures. Engineering judgement must be exercised by staff when evaluating procedures or situations not specifically covered herein. Unique problems or unusual solutions may require deviations from the criteria and/or procedures outlined in this chapter. In these cases, such deviations must be evaluated on an individual basis in accordance with Chapter 1, paragraph 1-4 of these Engineering Guidelines

3-1.2 Review Procedures

Review by the staff of analyses performed by licensees, or their consultants, should concentrate on the assumptions used in the analysis. The basis for critical assumptions such as allowable stresses, shear strengths, drain effectiveness, and loading conditions should be carefully examined. The consultant's reports, exhibits, and supplemental information must provide justification for these assumptions such as foundation exploration and testing, concrete testing, instrumentation data, and records maintained during the actual construction of the project. Also, the staff engineer's independent knowledge of the dam gained through site inspections or review of operations inspection report as well as familiarity with previous reports and analyses, should be used to verify that the exhibits presented are representative of actual conditions. Methods of analysis should conform to the conventional procedures used in the engineering profession.

Conservative assumptions can reduce the amount of exploration and testing required. For example, if no cohesion or drain effectiveness is assumed in an analysis, there would be no need to justify those assumptions with exploration and testing. For this reason, it may sometimes be more beneficial to analyze the dam with conservative assumptions rather than to try to justify less conservative assumptions. There is however a minimum knowledge of the foundation that must be obtained. The potential for sliding on the dam foundation is generally investigated. However, the potential for failure through a deep surface deep in the foundation should be investigated. Experience has shown that the greatest danger to dam stability results when critical attributes of the foundation are not known. For example, in the case of Morris Shephard Dam, 26/ P-1494, a horizontal seam underlaid the dam, providing a plane of weakness that was not

considered. This oversight was only discovered after the dam had experienced significant downstream movement.

3-2 Forces

3-2.1 General

Many of the forces which must be considered in the design of the gravity dam structure are of such a nature that an exact determination cannot be made. The intensity, direction and location of these forces must be estimated by the engineer after consideration of all available facts and, to a certain extent, must be based on judgment and experience.

3-2.2 Dead Loads

Unless testing indicates otherwise, the unit weight of concrete can be assumed to be 150 lb/ft^3. In the determination of the dead load, relatively small voids, such as galleries, normally are not deducted unless the engineer judges that the voids constitute a significant portion of the dam's volume. The dead loads considered should include weights of concrete and superimposed backfill, and appurtenances such as gates and bridges.

3-2.3 External Water Imposed Loads

3-2.3.1 Hydro Static Loads

Although the weight of water varies slightly with temperature, the weight of fresh water should be taken at 62.4 lb/ft^3. A linear distribution of the static water pressure acting normal to the surface of the dam should be applied.

3-2.3.2 Nappe Forces

The forces acting on an overflow dam or spillway section are complicated by steady state hydrodynamic effects. Hydrodynamic forces result from water changing speed and direction as it flows over a spillway. At small discharges, nappe forces may be neglected in stability analysis; however, when the discharge over an overflow spillway approaches the design discharge, nappe forces can become significant and should be taken into account in the analysis of dam stability.

Previous FERC gravity dam guidance dealt with nappe forces by ignoring the weight of the nappe on top of the structure and by requiring that the tailwater be assumed

to be 60% of its expected height. This method does not sufficiently account for sub-atmospheric crest pressures and high bucket pressures, and in some cases it can yield un-conservative results. While this practice is still acceptable, it may be desirable to determine forces due to the nappe and tailwater more rigorously. References 3 and 4 can be used to determine more accurate nappe pressure distribution. Also, Appendix A of this chapter presents a general method for the determination of nappe pressures.

If the tailwater is greater than the conjugate depth, tailwater will fall back against the dam, submerging the jet and lessening hydrodynamic effects. However, unless there is clear evidence that tailwater will be in excess of the conjugate depth, it shall be assumed that tailwater is blown downstream of the dam by the discharge, and that tailwater has no effect on the nappe pressures on the dam. Downstream channel conveyance characteristics are typically not well known for unprecedented discharges. For this reason, it should not be assumed that tailwater will drown out the hydraulic jump without sufficient justification.

3-2.4 Internal Hydrostatic Loads (Uplift)

3-2.4.1 General

Any stability analysis of the dam should seek to apply forces that are compatible with the failure mechanism being assumed. For this reason, it is less important to determine what the uplift pressures on a dam are at present than it is to determine what they would be during failure. Uplift should be assumed to exist between the dam and its foundation, and within the foundation below the contact plane and it should also be applied within any cracks within the dam. Uplift is an active force which must be included in the analysis of stability. Uplift shall be assumed to act over 100 percent of the area of any failure plane whether that plane is within the dam, at the contact with the foundation or at any plane within the foundation.

3-2.4.2 Horizontal Planes within the Dam

Uplift along failure planes within the body of the dam shall be assumed to vary from 100% of normal headwater at the upstream face to 100% of tailwater or zero, as the case may be, at the downstream face. When a vertical drainage system has been provided within the dam, the drain effectiveness and uplift assumptions should follow the guidance provided in paragraph 3-2.4.3 below, and should be verified by instrumentation.

3-2.4.3 Rock Foundations

Uplift distribution at the plane of contact of the dam and its foundation, and within the foundation depends on depth and spacing of drains, grout curtain, rock permeability, jointing, faulting, and any other geologic features which may modify the seepage or flow of water. Effective downstream drainage, whether natural or artificial will usually limit the uplift pressure at the toe of the dam to tailwater pressure. However, there are situations where the orientation of joint systems and/or bedding planes transmit high uplift pressures to areas of the base downstream of the drainage system.

The uplift reduction due to seepage control measures such as drainage and/or grouting should not be assumed unless the geologic characteristics of the foundation have been thoroughly investigated and the design of the seepage control measures has been tailored to correct the specific deficiencies of the site. Uplift reduction can only be assured by implementation of a comprehensive monitoring and maintenance program. For this reason structures with closed drainage systems, which do not allow inspection or maintenance, are considered to be subject to full uplift loading unless a monitoring system is installed to verify uplift pressures on a periodic basis. Increasing uplift pressures that can not be corrected because of the closed system may necessitate structural modifications.

It is helpful to coordinate closely with an experienced engineering geologist to evaluate the character of the foundation and the effectiveness of a drainage system. Any drain effectiveness assumptions made should be coupled with a testing and monitoring program aimed at verifying the assumptions. The system should include instrumentation to verify continued operation of the drains and to determine the effects of corrosion or clogging upon the original effectiveness assumption. A maintenance program for the system should be developed and implemented that is consistent with the nature of the system. In general, maintenance should include, but not be limited to: periodic testing to locate clogged and inoperative drains; redrilling or cleaning of drains which have become clogged; installation of additional drains to achieve design concept; and periodic monitoring and calibration of pressure gages.

Uplift reduction due to drainage assumes that the drainage system vents the high pressure area under the dam to tailwater pressure. This intended purpose can be thwarted however if the drainage system exits into a region of high hydrodynamic pressure as shown in figure 1. In this case, the drainage system is vented to tailwater under normal conditions, however, during flood discharges the drain system can become pressurized.

Staff review of assumptions concerning uplift reduction should always be conservative. Instrumentation data should be submitted in support of uplift reduction assumptions, and even when instrumentation indicates that uplift reduction is occurring, the reviewer must question whether or not the headwater, tailwater and foundation stresses that control the magnitude and distribution of uplift pressure will remain the same under more severe conditions.

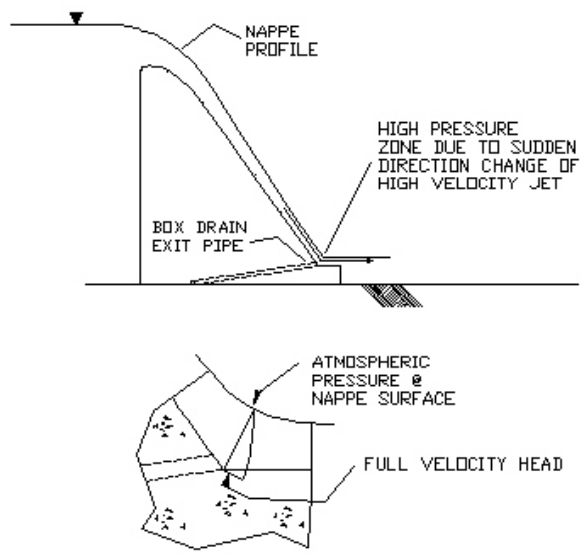

Figure 1

The following guidance shall be applied to staff review of the design assumptions. The uplift criteria cited herein may be relaxed only when sufficient field measurements of actual uplift pressures justify any proposed deviations.

3-2.4.3.1 Uplift Assumptions

Uplift at the foundation-concrete interface for structures having no foundation drains or an unverified drainage system should be assumed to vary as a straight line from 100% of the headwater pressure at the upstream face (heel) to 100% of the tailwater pressure at the downstream face (toe) applied over 100% of the base area. Local reductions in tailwater elevations produced by hydrodynamic effects described in section 3-2.3.2 shall **not** be included in uplift computation.

Uplift at the concrete/rock interface for structures having an open verifiable drainage system should be assumed to vary as a straight line from full headwater pressure at the heel or theoretical crack tip, to reduced uplift at the drain, and then to full tailwater pressure at the toe (See figure 2). The drain effectiveness (E) must be verified by instrumentation and an effective maintenance plan as outlined in paragraph 3-2.4.3 must be implemented. Note that if heads are measured from any other datum than the dam base, the dam base elevation must be subtracted from the absolute heads to yield uplift pressure. It is also assumed that the gallery is free draining.

$$H4 > TW$$

$$H3 = K*[(HW-TW)*\frac{(L-X)}{(L-T)}+TW-H4] + H4$$

$$H4 < TW$$

$$H3 = K*[(HW-TW)*\frac{(L-X)}{(L-T)}] + TW$$

$$K = (1-E)$$

$$E = DRAIN\ EFFECTIVENESS$$

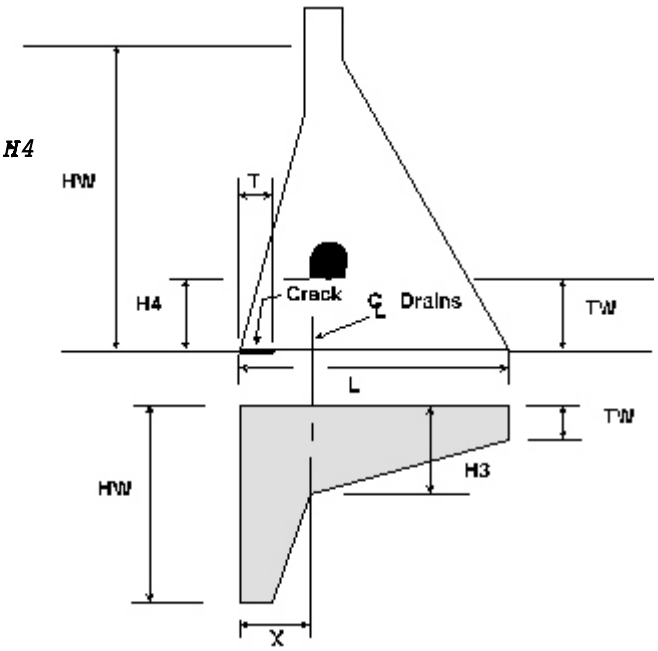

Figure 2

$$H4 > TW$$

$$H3 = K*(HW-H4) + H4$$

$$H4 < TW$$

$$H3 = K*(HW-TW) + TW$$

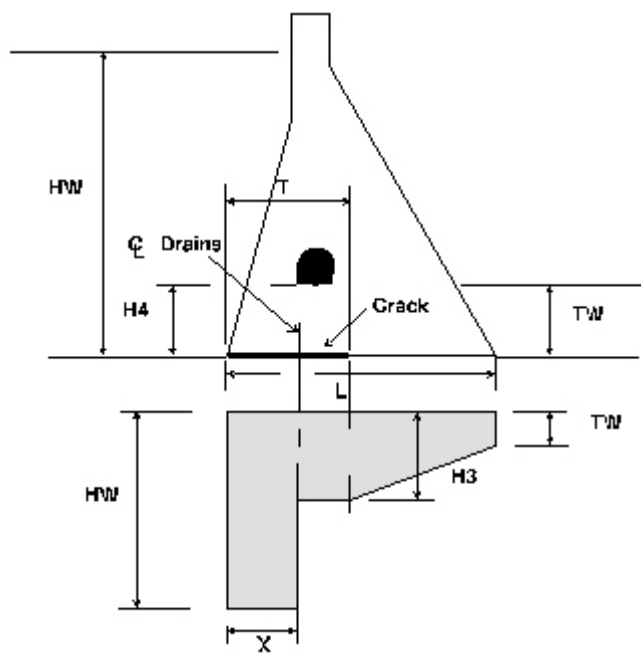

Figure 3

The assumption of full reservoir uplift in the non-compressive zone results from the realization that if the crack width becomes sufficiently large, the base will become exposed to the reservoir and the drains will become completely in-effective. This assumption is compatible with the limit state failure mechanism that is considered in an overturning failure. For this reason,

uplift on any portion of the base or section not in compression should be assumed to be 100% of the assumed upstream head except when the non-compressive foundation pressure is the result of earthquake forces. If, however, instrumentation can verify use of less than 100%, then uplift pressure may be reduced accordingly. Uplift distribution for the case in which the theoretical foundation crack extends beyond the line of drains is shown in figure 3.

Deviations from the pressure distributions shown in figures 2 and 3 may be considered provided there is sufficient justification such as instrumentation of foundation abnormalities.

Typically, measured drain efficiency must be considered valid only for the reservoir loading at which the measurement was taken. Extrapolation to higher reservoir levels in the absence of supporting field data is not valid, especially where the applied forces from the unusual loading condition are significantly different than the usual loading condition. However, extrapolation of drain efficiencies for higher reservoir levels may be allowed on a case-by-case basis. Staff engineers should consider the specific conditions at each project to determine if extrapolation of drain efficiencies is valid. Factors which should be considered are as follows:

a. The difference in the character of foundation stresses produced. Crack extent and dimensions are influenced by the stresses imposed on the foundation. If analysis indicates that the foundation stresses will be significantly different, crack geometry and therefore drain efficiency may be different.

b. The difference between drain efficiency assumed in the design and the measured drain efficiency. If there is some margin for error, extrapolation is easier to justify.

c. Whether or not a theoretical crack propagates beyond the location of the drains during the loading conditions at which measurements are available. If a crack is indicated, then the drainage system may be assumed to perform adequately under cracked base conditions.

d. The degree of understanding of the geology of the foundation of the dam. As outlined in paragraph 3-5.3, a reduction in the uncertainties associated with the selection of design parameters can lead to a corresponding reduction in required factors of safety. This principle can also be applied to the extrapolation of drain efficiencies. Better definition of the geologic characteristics of the foundation which affect seepage parameters can also reduce the uncertainties associated with drain efficiency extrapolation.

e. The sensitivity of the stability drain effectiveness assumptions. If drain efficiency is required to keep the theoretical base crack from extending all the way through the dam, extrapolation of drain efficiency assumptions into unprecedented loading conditions should be viewed with great skepticism.

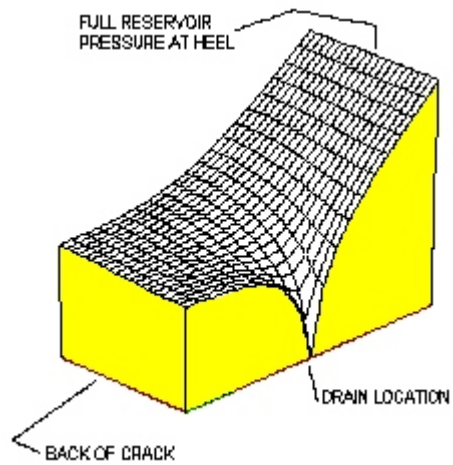

Figure 4

When analysis indicates that a theoretical crack propagates beyond the drains for an unprecedented load condition such as the PMF, the amount of drain efficiency that can exist is limited by certain physical constraints. Even if the pressure at a given drain is zero, the effect of this pressure reduction is very local as can be seen in figure 4.

For cases in which the theoretical base crack extends beyond the drains, the resulting uplift force should not be assumed to be less than that calculated by the idealization shown below , where $\nabla^2 \cdot P = 0$ and the boundary conditions are those depicted in figure 5.

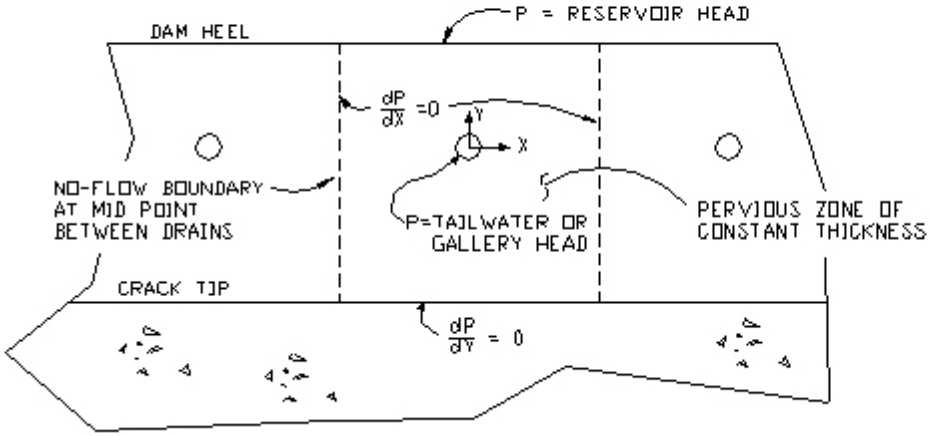

Figure 5

3-2.4.3.2 Grouting

Grouting alone should not be considered sufficient justification to assume an uplift reduction. A grout curtain may retard foundation flows initially, but the degree of uplift relief may be lessened as the age of the dam increases due to deterioration of the curtain. A drainage system should be utilized downstream of grout curtains and, a monitoring system should be employed to determine actual uplift pressures and to detect any reduction in drain efficiency due to clogging of the drains.

3-2.4.3.3 Aprons

Upstream and downstream aprons have the effect of increasing the seepage path under the dam. For an upstream apron properly sealed to prevent leakage, the effect is to reduce the uplift under the dam. The effectiveness of upstream aprons in reducing uplift is compromised if cracks and joints in the apron permit leakage. Conversely, downstream aprons such as stilling basins have the effect of increasing uplift under the dam. (See figure 6) Uplift reduction should be justified by instrumentation.

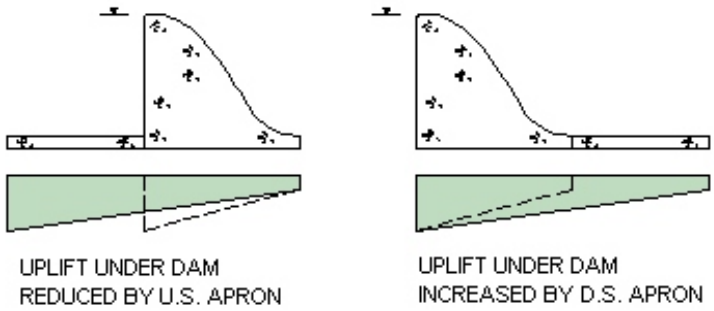

Figure 6

In the case of downstream aprons, it may be assumed that uplift is limited to that which would float the apron.

3-2.4.3.4 Reservoir Silt

Reservoir silt can reduce uplift under a dam in a manner similar to an upstream apron. 14/ Uplift reduction should be justified by instrumentation.

Because of potential liquefaction of the silt during a seismic event, uplift reduction due to silt may be lost in seismic situations. If liquefaction occurs, pore pressure in the silt will increase. This condition of elevated pore pressure may persist for some time after the seismic event. For this reason, uplift reduction due to silt may not be relied upon when considering post earthquake stability.

3-2.4.3.5 Earthquake

Uplift pressures should be assumed to be those existing under normal conditions during earthquake loading. However, when performing post earthquake stability analysis, the effects of silt liquefaction, apron cracking, or potential offsets must be considered.

3-2.4.3.6 Flood Loading

Uplift reductions should not be based on the assumption that the IDF flood event will be of such short duration and the permeability of the foundation so low that the elevated headwater and tailwater pressures are not transmitted under the base of the dam. This less than conservative assumption is invalid because extreme design floods and the resulting elevated water levels often last many hours, if not days, and because in a saturated rigid system such as a rock foundation with joints, extremely small volume changes can transmit large pressure changes. In the absence of corroborative evidence (e.g., measurements of piezometer levels during prior floods) the uplift should be assumed to vary directly with changes in headwater and tailwater levels. For more discussion of flood loading, refer to Chapter 2 of these guidelines.

3-2.4.4 Soil Foundations

Uplift pressures acting upon the base of a gravity structure constructed on a pervious soil foundation are related to seepage through permeable materials. Water percolating through pore spaces in the materials is retarded by frictional resistance, somewhat the same as water flowing through a pipe. The intensity of the uplift can be controlled by construction of properly placed aprons, cutoffs and other devices. 19/

Base cracking may not affect the uplift distribution under a soil founded dam as much as under a dam founded on rock. If the soil is relatively pervious, a small crack between the dam and foundation may cause no effect. For this reason, the standard cracked base uplift distributions in section 3-2.4.3.1 of this chapter may not be applicable. One of the following methods should be used to estimate the magnitude of the uplift pressure:

3-2.4.4.1 Creep Theory

The word "Creep" in this usage refers to a simplified method which can be used to estimate uplift pressure under a structure. Under creep theory, the uplift pressure is assumed to be the sum of two components; the seepage potential and the position potential.

The seepage potential is calculated by first determining the creep distance which a molecule of water would follow as it flows beneath the structure. The creep distance starts at a point on the ground line directly over the heel, and ends at another point on the ground line directly above the toe, following the boundary of the sides and bottom of buried concrete. The seepage and position potentials are then calculated as shown in figure 7.

$$SEEPAGE\ POTENTIAL = (HW - TW)\left(\frac{(LT - LP)}{LT}\right)$$

$$POSITION\ POTENTIAL = (TW - HP)$$

$$PRESSURE = \gamma_w(SEEPAGE + POSITION)$$

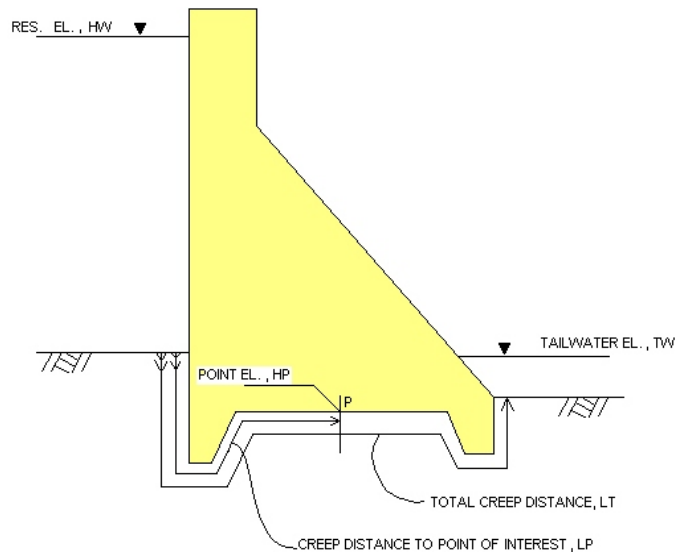

Figure 7

The effective uplift pressure at a point is then calculated by multiplying the sum of the seepage and position potentials of the points by the unit weight of water.

In most cases, the vertical and horizontal permeability of soil are not equal. Typically, the horizontal permeability (k_h) is 3 times as great as the vertical permeability (k_v) A "weighted creep" recognizes the differences in vertical and horizontal permeability of most soil foundations by multiplying the horizontal distances along the creep path by the ratio $(k_v)/(k_h)$.

The weighted creep distance L_w , should be calculated as shown below:

$$L_w = \frac{K_v}{K_h} * L_h + L_v$$

Where:
- K_h= horizontal permeability
- K_v= vertical permeability
- L_h= horizontal length of creep path
- L_v= vertical length of creep path
- L_w= weighted creep distance

3-2.4.4.2 Flow Net Method

This method is a graphical procedure which involves the construction of flow lines and lines of equal potential (lines drawn through points of equal total head) in subsurface flow. Flow lines and equipotential lines are superimposed upon a cross section of the soil through which the flow is taking place. Reference for the procedure is made to any standard text book on soil mechanics, or reference 19/.

3-2.4.4.3 Finite Element Method

Two and 3 dimensional finite element ground water modeling can also be used in a manner similar to the flow net method. Material anisotropy can be factored into these analyses.

3-2.5 Earth and Silt Pressures

3-2.5.1 Earth Pressures

Earth pressures exerted on dams or other gravity structures by soil backfills should be calculated as outlined in reference 19. In most cases, at rest earth pressures should be assumed. The rigidity of the foundation and the character of the backfill, along with the construction sequence, may affect this assumption. The unit weight of the backfill and material strength parameters used in the analysis should be supported by site investigations. If the backfill is submerged, the unit weight of the soil should be reduced by the unit weight of water to determine the buoyant weight.

Earth backfill on the downstream side of a gravity dam has a beneficial effect on stability, however, if flood conditions can overtop the dam and lead to erosion of the backfill, it can not be relied upon for its stabilizing effects.

3-2.5.2 Silt Pressures

The silt elevation should be determined by hydro graphic surveys. Vertical pressure exerted by saturated silt is determined as if silt were a saturated soil, the magnitude of pressure varying directly with depth. Horizontal pressure exerted by the silt load is calculated in the same manner as submerged earth backfill. Silt shall be assumed to liquefy under seismic loading. Thus, for post earthquake analysis, silt internal shear strength shall be assumed to be zero unless site investigations demonstrate that liquefaction is not possible.

3-2.6 Earthquake Forces

Earthquake loadings should be selected after consideration of the accelerations which may be expected at each project site as determined by the geology of the site, proximity to major faults, and earthquake history of the region as indicated by available seismic records. Seismic risk maps can be used to establish the probability zone for projects which do not have detailed seismicity studies. A set of seismic risk maps are available from the United States Geological Survey, (USGS) at:

http://geohazards.cr.usgs.gov/eq/

Other widely accepted seismic risk maps can also be used as a starting point for the determination of seismic loading.

While a variety of sources can be cited, the determination of the Maximum Credible Earthquake for a site remains the responsibility of the licensee. General seismic hazard maps such as that cited above may not sufficiently account for local seismicity. Site specific seismic studies may be required. See the seismicity chapter of these guidelines for more information.

Seismic loading need not be considered for structures for which the MCE produces a peak ground acceleration of less than 0.1g at the site. Procedures for evaluating the seismic response of the dam are given in Section 3-4.4 of this chapter.

3-2.7 Ice Loading

3-2.7.1 Ice Pressures

Ice pressure is created by thermal expansion of the ice and by wind drag. Pressures caused by thermal expansion are dependent on the temperature rise of the ice, the thickness of the ice sheet, the coefficient of expansion, the elastic modulus and the strength of the ice. Wind drag is dependent on the size and shape of the exposed area, the roughness of the surface, and the direction and velocity of the wind. Ice loads are usually transitory. Not all dams will be subject to ice pressure and the engineer should decide whether an ice load is appropriate after consideration of the above factors. An example of the conditions conducive to the development of potentially high ice pressure would be a reservoir with hard rock reservoir walls which totally restrain the ice sheet. In addition, the site meteorological conditions would have to be such that an extremely rigid ice sheet develops. For the purpose of the analysis of structures for which an ice load is expected, it is recommended that a pressure of 5000 pounds per square foot be applied to the contact surface of the structure in contact with the ice, based upon the expected ice

thickness. The existence of a formal system for the prevention of ice formation, such as an air bubble system, may reduce or eliminate ice loadings. Information showing the design and maintenance of such a system must be provided in support of this assumption. Ice pressure should be applied at the normal pool elevation. If the dam is topped with flashboards, the strength of the flashboards may limit the ice load. Further information concerning ice loadings can be found in reference 21/.

3-2.7.2 Ice /Debris Impact

Some rivers are subject to ice and debris flow. Current bourne ice sheets weighing several tons, and/or debris can impact dams and cause local damage to piers, gates or machinery. Several dams have experienced very large reservoir surcharges under moderate flood events due to plugging of spillway bays by debris or floating ice. When the ability of a spillway to pass floods is evaluated, the effect of ice and debris should be considered.

3-2.8 Temperature & Aggregate Reactivity

Volumetric changes caused by thermal expansion and contraction, or by alkali/aggregate reactivity affect the cross valley stresses in the dam. These stresses are important when 3 dimensional behavior is being considered. Expansion will cause a dam to wedge itself into the valley walls more tightly, increasing its stability. Contraction has the opposite effect. While these effects are acknowledged, the beneficial effect of expansion is difficult to quantify even with very elaborate finite element models because it is contingent on the modulus of deformation of the abutments which is highly variable. For this reason, the beneficial effects of expansion should not be relied upon in three dimensional stability analysis. If it appears that contraction will cause monolith joints to open, and thus compromise force transfer from monolith to monolith, this effect should be considered.

3-3 Loading Combinations

3-3.1 General

The following loading conditions and requirements are suitable in general for gravity dams of moderate height. Loads which are not indicated, such as wave action, or any unusual loadings should be considered where applicable.

3-3.2 Case I Usual Loading Combination - Normal Operating Condition

The reservoir elevation is at the normal power pool, as governed by the crest elevation of an overflow structure, or the top of the closed spillway gates whichever is greater. Normal tailwater is used. Horizontal silt pressure should also be considered, if applicable.

3-3.3 Case II Unusual Loading Combination - Flood Discharge Loading

For high and significant hazard potential projects, the flood condition that results in reservoir and tailwater elevations which produce the lowest factor of safety should be used. Flood events up to and including the Inflow Design Flood, if appropriate, should be considered. For further discussion on the Inflow Design Flood, refer to chapter 2 of these guidelines.

For dams having a low hazard potential, the project should be stable for floods up to and including the 100 year flood.

3-3.4 Case II A Unusual Loading Combination - Ice

Case I loading plus ice loading, if applicable.

3-3.5 Case III Extreme Loading Combination - Case 1+Earthquake

In a departure from the way the FERC has previously considered seismic loading, there is no longer any acceptance criteria for stability under earthquake loading. Factors of safety under earthquake loading will no longer be evaluated. Acceptance criteria is based on the dam's stability under post earthquake static loading considering damage likely to result form the earthquake. The purpose of considering dynamic loading is to determine the damage that will be caused so that this damage can be accounted for in the subsequent post earthquake static analysis.

Factors to consider are as follows:

- Loss of cohesive bond in regions of seismically induced tensile stress.

- Degradation of friction angle due to earthquake induced movements or rocking.

- Increase in silt pressure and uplift due to liquefaction of reservoir silt. (See section 3.2.5.2)

Recommended procedures for seismic analysis are presented in section 3-4.4.

3-4 Methods of Analysis

3-4.1 General

Selection of the method of analysis should be governed by the type and configuration of the structure being considered. The gravity method will generally be sufficient for the analysis of most structures, however, more sophisticated methods may be required for structures that are curved in plan, or structures with unusual configurations.

3-4.2 Gravity Method

The gravity method assumes that the dam is a 2 dimensional rigid block. The foundation pressure distribution is assumed to be linear. It is usually prudent to perform gravity analysis before doing more rigorous studies. In most cases, if gravity analysis indicates that the dam is stable, no further analyses need be done. An example gravity analysis is presented in Appendix C of this chapter. Stability criteria and required factors of safety for sliding are presented in Section 3-5.

3-4.3 Finite Element Methods

3-4.3.1 General

In most cases, the gravity analysis method discussed above will be sufficient for the determination of stability. However, dams with irregular geometries or spillway sections with long aprons may require more rigorous analysis. The Finite Element Method (FEM) permits the engineer to closely model the actual geometry of the structure and account for its interaction with the foundation. For example, consider the dam in figure 8. Note that the thinning spillway that forms the toe of the dam is not stiff enough to produce the foundation stress distribution assumed in the gravity method. In this case, gravity analysis alone would have under-predicted base cracking.

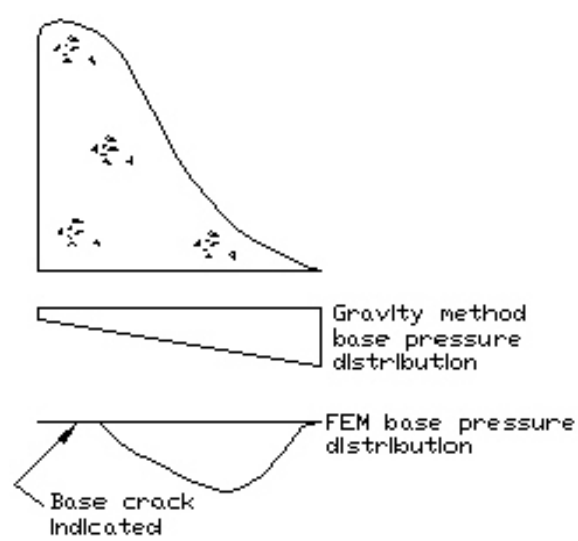

Figure 8

Finite element analysis allows not only modeling of the dam, but also the foundation rock below the dam. One of the most important parameters in dam/foundation interaction is the ratio of the modulus of deformation of the rock to the modulus of elasticity of the dam concrete. Figure 9 illustrates the effect that this ratio has on predicted crack length. As the modular ratio varies, the amount of predicted base cracking varies also. As can be seen in figure 9, assuming a low deformation modulus (E_r), is not necessarily conservative.

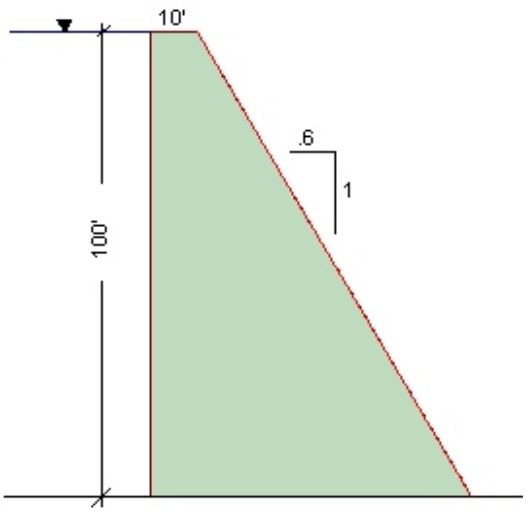

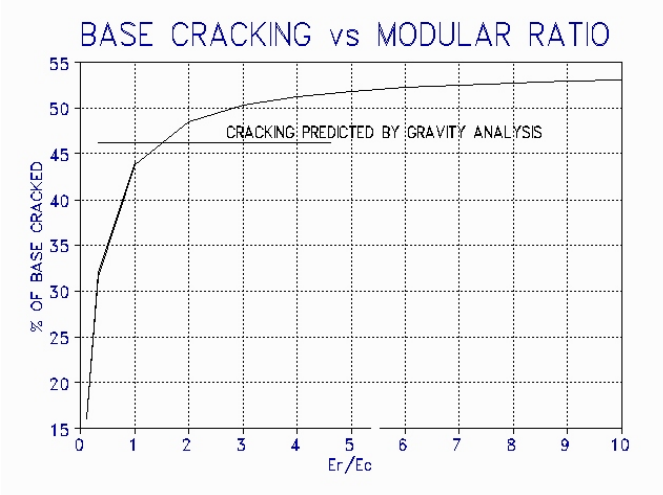

Figure 9

In gravity analysis, the distribution of foundation shear stress is not specifically addressed. However, it is implicitly assumed that shear stress is distributed uniformly across the base. This assumption is arbitrary and not very accurate. Finite element modeling can give some insight into the distribution of base contact stress. As can be seen in figure 10, shear stress is at a maximum at the tip of the propagating base crack. In this area, normal stress is zero, thus all shear resistance must come from cohesion. Also, the peak shear stress is about twice the average shear stress. An un-zipping failure mode can be seen here, as local shear strength is exceeded near the crack tip, the crack propagates causing shear stress to increase in the area still in contact. This is one reason why this chapter favors allowing lower factors of safety for no cohesion analysis. In this example, the dam is being significantly overtopped.

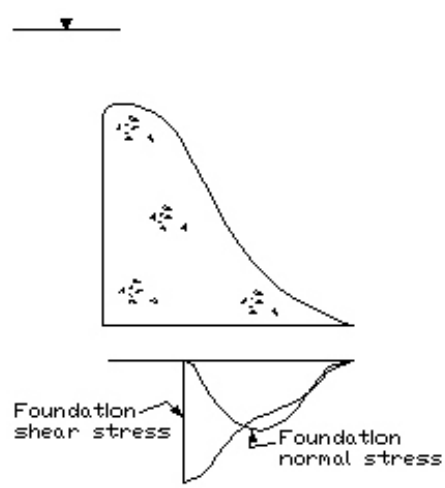

Figure 10

3-4.3.2 Two-Dimensional Finite Element Analysis

Two-dimensional finite element analysis is adaptable to gravity dam analysis when the assumption of plane strain is used. Sections including auxiliary works can be analyzed to determine their stress distribution. As seen above, 2-dimensional finite element analysis allows the foundation, with its possible wide variation in material properties, to be included with the dam in the analysis.

3-4.3.2.1 Uplift Loads for Finite Element Studies

Uplift pressures must be included in finite element studies. Pressures are calculated using the same procedures as conventional gravity dam analyses as outlined in Section 3-2.4. Figure 11 shows a very effective means of uplift application. The use of a thin interface layer of elements (standard Q4 elements) allows the uplift pressure to be applied to the bottom of the dam and the top of the foundation. The resulting stress output for these interface elements then includes the effects of uplift. The procedure also has the benefit of allowing interface elements to be systematically deleted so that a cracked base analysis may be performed in an iterative manner. As in conventional gravity analysis, whenever base cracking is indicated by the presence of tensile stress normal to the foundation in the interface elements, the uplift distribution should be modified accordingly.

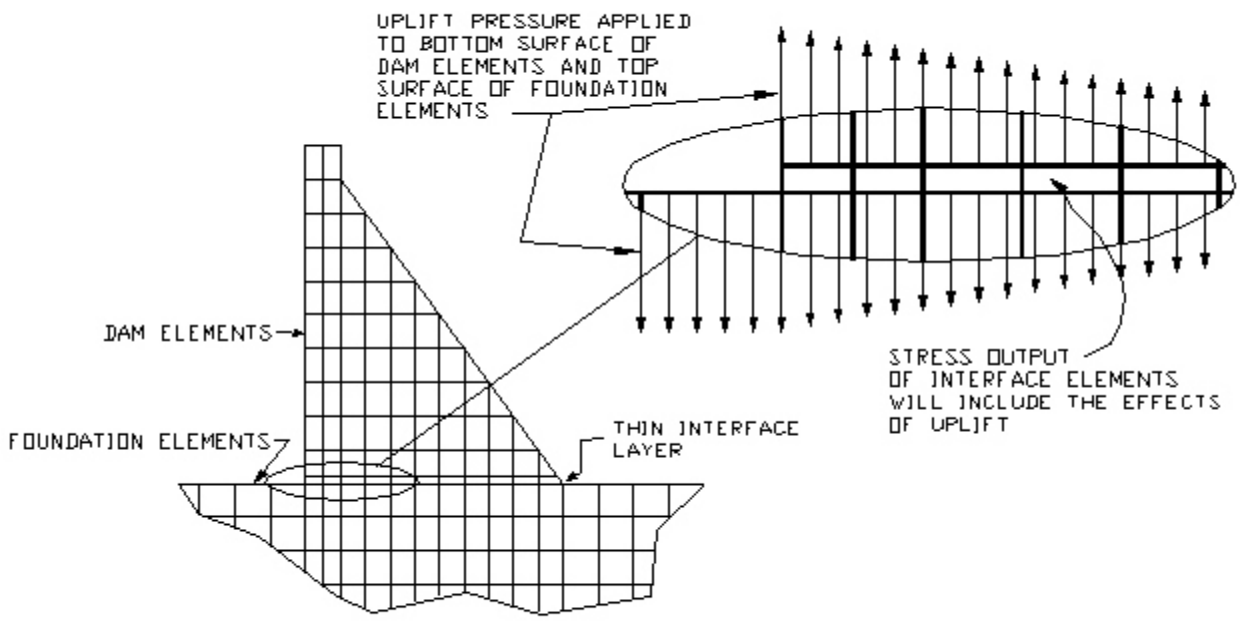

Figure 11

There are many non-linear finite element codes available which allow base cracking and sliding to be modeled automatically.

3-4.3.3 Three-Dimensional Finite Element Analysis

Three-dimensional (3-D) FEM should be used when the structure or loading is such that plane strain conditions may not be assumed, such as when the geometry is such that the stability of the dam depends upon stress distribution parallel to its axis, as is the case of a gravity-arch dam which is curved-in plan, or when a dam is in a narrow valley. Three dimensional analysis allows the rigorous determination of what forces will be applied to the foundation, and where. If 3 dimensional behavior is to be considered, features that enable horizontal force transfer such as shear keys or curvature in plane must be present

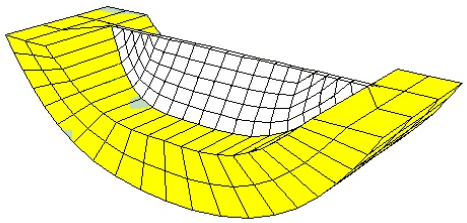

3-4.3.4 Analysis of Results of Finite Element Method Studies

It is important to realize that the question before the reviewer is whether or not the dam will fail under a given loading condition. In the review of finite element analyses, it is easy to lose sight of the original question in view of the voluminous stress output that typically results. The reviewer should never forget that stress at a point in the dam may or may not be informative with respect to whether or not the dam will fail. Unlike the conventional gravity technique which pre-supposes failure mechanisms, namely sliding and overturning, the standard linear elastic finite element method does not address failure mechanisms. It is up to the reviewer to determine the value of the analysis based on how it addresses the possibility of failure mechanisms.

Whatever distribution of stress that results from an finite element analysis, it should be verified that global force and moment equilibrium are satisfied. In addition, the stress states in individual elements must be within the limits of the material strength. For example, if the analysis indicates tension at the dam/foundation interface, the analysis should be re-run with tensile elements eliminated from the stiffness matrix.

Excessive shear stress at the interface can also be a problem. For example, figure 10 (3-4.3.1) shows that the peak shear stress on the dam/foundation interface is in elements with zero normal stress. This means that there is no frictional resistance available at this location, and that all shear stress must be transferred through cohesive bond alone. If the reviewer questions the availability of cohesive strength at the interface, the analysis should be re-run with the shear stiffness of these elements effectively reduced so that shear stress can be re-distributed. This can be handled automatically with many finite element programs using gap-friction elements.

3-4.4 Dynamic Methods

Dynamic analysis refers to analysis of loads whose duration is short with respect to the first period of vibration of the structure. Such loads include seismic, blast, and impact. Dynamic methods described in this chapter are appropriate to seismic loading.

Because of the oscillatory nature of earthquakes, and the subsequent structural responses, **conventional moment equilibrium and sliding stability criteria are not valid when dynamic and pseudo dynamic methods are used.** The purpose of these investigations is not to determine dam stability in a conventional sense, but rather to determine what damage will be caused during the earthquake, and then to determine if the dam can continue to resist the applied static loads in a damaged condition with possible loading changes due to increased uplift or silt liquefaction (See 3-2.4.3.5). It is usually preferable to use simple dynamic analysis methods such as the pseudo dynamic method or the response spectrum method (described below), rather than the more rigorous sophisticated methods.

3-4.4.1 Pseudo Dynamic Method

This procedure was developed by Professor Anil Chopra as a hand calculated alternative to the more general analytical procedures which require computer programs. It is a simplified response spectrum analysis which determines the structural response, in the fundamental mode of vibration, to only the horizontal component of ground motion. This method can be used to evaluate the compressive and tensile stresses at locations above the base of the dam. Using this information, degree of damage can be estimated and factored into a post earthquake stability analysis. References 8 and 13 provide an explanation of this method, and sample calculations.

3-4.4.2 Modal Dynamic Methods

Dynamic response analysis is typically performed using finite element modal analysis. The major modes of vibration are calculated, and the response of the structure to the earthquake is expressed as a combination of individual modal responses. There are 2 acceptable techniques for modal analysis, Response Spectrum Analysis and Time History Analysis.

3-4.4.2.1 Response Spectrum Method

In the response spectrum method, the modes of vibration determined from finite element modeling are amplitude weighted by a response spectrum curve which relates the maximum acceleration induced in a single degree of freedom mechanical oscillator to the oscillator's natural period. A typical response spectrum curve is shown in figure 12. Because the timing of the peaks of individual modal responses is not taken into account, and because peaks of all modes will not occur simultaneously, modal responses are not combined algebraically. Modal responses are combined using the SRSS (square root of sum of squares) or the CQC (complete quadratic combination) methods. For further guidance on the use of this method, refer to chapter 11 of these guidelines, or reference 28.

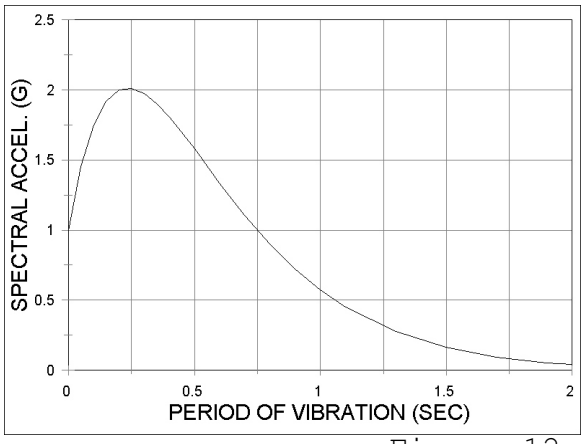

Figure 12

3-4.4.2.2 Time History Method

The time history method is a more rigorous solution technique. The response of each mode of vibration to a specific acceleration record is calculated at each point in time using the Duhamel integral. All modal responses are then added together algebraically for each time step throughout the earthquake event. While this method is more precise than the response spectrum method for a given acceleration record, its results are contingent upon the particulars of the acceleration record used. For this reason, time history analysis should consider several accelerograms. For further guidance on the use of this method, refer to chapter 11 of these guidelines, or reference 28.

3-4.4.3 Direct Solution Methods

The modal superposition methods described above require the assumption of material linearity. Direct solution techniques solve the differential equations of motion in small time steps subject to material stress strain relationships which can be arbitrary, and therefore the development of damage can be accounted for. Their results are also highly affected by the particular accelerogram used.

3-4.4.4 Block Rocking Analysis

When dynamic analysis techniques such as those discussed above indicate that concrete cracking will occur, a block rocking analysis can be done. This type of analysis is useful to determine the stability of gravity structures or portions thereof, when it is determined that cracking will progress to the extent that free blocks will be formed. The dynamic behavior of free blocks can be determined by summing moments about the pivot point of rocking. More information on this method can be found in reference 12, or in Appendix 3B of this chapter.

3-4.4.5 Pseudo Static Method

The Pseudo Static method is not acceptable.

3-4.4.6 Reservoir Added Mass

During seismic excitation the motion of the dam causes a portion of the water in the reservoir to move also. Acceleration of this added mass of water produces pressures on the dam that must be taken into account in dynamic analysis. Westergaard derived a pressure distribution assuming that the dam would move upstream and downstream as a rigid body, in other words, the base and crest accelerations of the dam are assumed to be identical. 27/ This pressure distribution is accurate to the extent that the rigid body motion assumption is valid. The dam's structural response to the earthquake will cause additional pressure. Figure 13 shows the difference in pressure distributions resulting from rigid body motion and modal vibration.

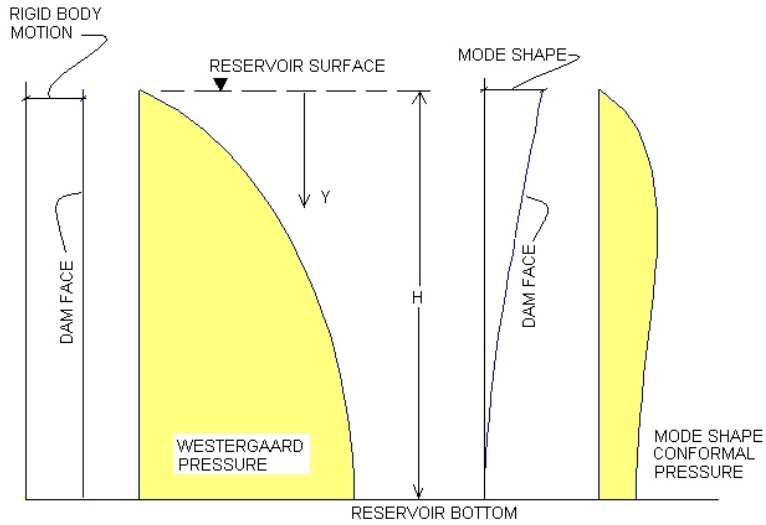

HYDRO-DYNAMIC PRESSURES DUE TO ACCELERATION OF RESERVOIR WATER

Figure 13

Westergaard's theory is based on expressing the motion of the dam face in terms of a fourier series. If the acceleration of the upstream face of the dam can be expressed as:

$$\ddot{\Delta} = \alpha \sum_{i=1}^{\infty} A_i SIN\left(\frac{i\pi y}{2H}\right)$$

where α is the ground acceleration, then the resulting pressure is given by :

$$P = \alpha \sum_{i=1}^{\infty} \left(\frac{2H}{i\pi}\right) A_i SIN\left(\frac{i\pi y}{2H}\right)$$

While, Westergaard assumed a rigid body acceleration, the above equations can be generalized to accommodate any mode shape.

As with the application of finite element techniques for static analysis, the reviewer must not lose sight of the purpose of the analysis, ie to determine whether or not a given failure mode is possible. Finite element techniques assume linear stress strain characteristics in the materials, and almost always ignore the effect of cracking in the dam. These assumptions can constitute rather gross errors. For this reason when reviewing the finite element results, the stress output should be viewed qualitatively rather than quantitatively. Finite element dynamic output can show where the structure is most highly stressed, but the stress values should not be considered absolute.

3-4.5 Cracked Base Analysis

The dam/foundation interface shall be assumed to crack whenever tensile stress normal to the interface is indicated. This assumption is independent of the analysis procedure used. The practical implementation of this requirement is illustrated in the gravity analysis shown below.

3-4.5.1 Determination of Resultant Location - Static Cases Only

All forces, including uplift are applied to the structure. Moments are taken about 0,0 which does not necessarily have to be at the toe of the dam. The line of action of the resultant is then determined as shown in the figure 14. The intersection of the resultant line of action and the sloping failure plane is the point of action of the resultant on the structure.

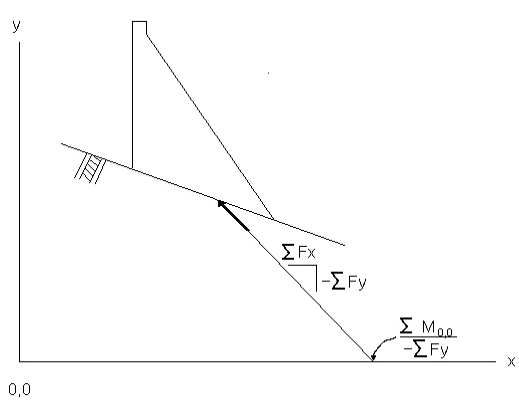

Figure 14

3.4.5.2 Determination of Theoretical Crack Length

A crack is assumed to develop between the base and foundation if the stress normal to the base is tensile. Since the gravity analysis technique assumes a linear effective stress distribution along the dam base, the length of this crack is uniquely determined by the location of the resultant and the assumption of a linear effective stress distribution. (See figure 15)

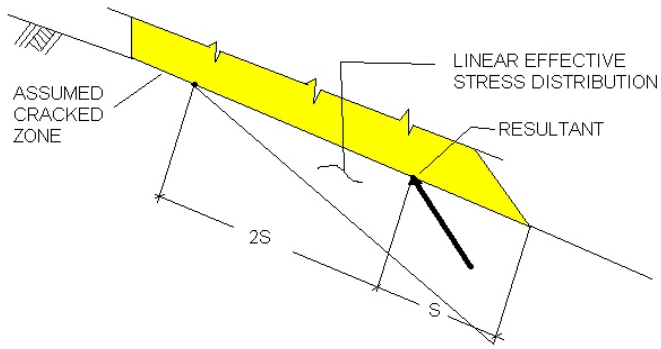

Figure 15

3-4.5.3 Cracking Induced by Dynamic Loading

Dynamic loading is equally capable of causing base cracking, however, cracked base analyses are not typically performed for dynamic loadings because of the computational difficulty involved. The conventional gravity analysis procedure is not appropriate for dynamic loading because it ignores the dynamic response of the structural system. Standard dynamic finite element techniques are not appropriate because they are based on an assumption of material linearity and structural continuity. What is typically assumed is that during the earthquake, extensive base cracking does occur. Stability under post earthquake conditions, which include whatever damage results from the earthquake, must be verified.

3-4.6 Review of Computer Analyses

The FERC does not endorse specific computer programs. The FERC has on occasion requested very detailed information about the internal workings of computer programs. For this reason, those who submit computer analyses should have full knowledge of not only what the results of the analysis were, but also why. No matter which program is used, the engineer must stand behind the result.

Output data should be spot checked and compared to hand calculated solutions wherever possible, to assure that the basic laws of statics have been satisfied, i.e., summation of forces and moments equals zero. For additional guidance on the finite element method, refer to reference 29.

3-5 Stability Criteria

3-5.1 General

Specific stability criteria for a particular loading combination are dependent upon the degree of understanding of the foundation structure interaction and site geology, and to some extent, on the method of analysis.

Assumptions used in the analysis should be based upon construction records and the performance of the structures under historical loading conditions. In the absence of available design data and records, site investigations may be required to verify assumptions.

Safety factors are intended to reflect the degree of uncertainty associated with the analysis. Uncertainty resides in the knowledge of the loading conditions and the material parameters that define the dam and the foundation. Uncertainty can also be introduced by simplifying assumptions made in analyses. When sources of uncertainty are removed, safety factors can be lowered.

3-5.2 Acceptance Criteria

3-5.2.1 Basic Requirements

The basic requirement for stability of a gravity dam subjected to static loads is that force and moment equilibrium be maintained without exceeding the limits of concrete, foundation or concrete/foundation interface strength. This requires that the allowable unit stresses established for the concrete and foundation materials not be exceeded. The allowable stresses should be determined by dividing the ultimate strengths of the materials by the appropriate safety factors in Table 2.

3-5.2.2 Internal Concrete Stresses

In most cases, the stresses in the body of a gravity dam are quite low, however if situations arise in which stress is a concern, the following guidance in table 1 is applicable.

Table 1

Load Condition	Shear Stress on Pre-cracked Failure Plane[1]	Principal Axis Tension Within Intact Concrete[2,4]
Worst Static	$1.4\ \sigma_n$	$1.7(F'c)^{2/3}$
Max. Dynamic	N.A.[3]	N.A.[3]

[1] ACI 318 has specified that the ultimate shear strength of concrete along a pre-existing crack in monolithically cast concrete is 1.4 times the normal stress on the crack (σ_n) , provided of course that the normal stress is compressive. (See reference 1)

[2] Shear failure of intact concrete is governed by the tensile strength of concrete normal to the plane of maximum principal axis tension. The limits shown are taken from reference 16.

[3] It is expected that earthquakes will induce stresses that exceed the strength of materials. For this reason, this guideline does not specify an allowable stress levels for this load case. Post earthquake analysis should be done with using procedures outlined for static analysis. If dynamic analysis does indicate that tensile cracking, shear displacements, or rocking are likely to occur, post earthquake static allowables should be downgraded accordingly. For example, if dynamic analysis indicates that a region will crack, the post earthquake tensile stress allowable for that region would be 0. If dynamic analysis indicates that shear failure will occur, then residual shear strenghts should be used.

[4] If pre-existing cracks exist, the tensile strength normal to the plane of the crack is 0. Also, the tensile strength of horizontal lift joints within the dam may be less than the parent concrete and testing may be required to establish allowable stresses. This is especially true in RCC dams, which often have low ensile strength across their lift joints.

The tensile strength of the rock-concrete interface should be assumed to be 0. Rock foundations may consist of adversely-oriented joints or fractures such that even if the interface could resist tension, the rock formation immediately below may not be able to develop any tensile capacity. Therefore, since stability would not be enhanced by an interface with tensile strength when a joint, seam or fracture in the rock only a few inches or feet below the interface has zero tensile strength, no tension will be allowed at the interface.

3-5.2.3 Sliding Stability Safety Factors

Recommended factors of safety are listed in table 2 and 2A.

TABLE 2

Recommended Minimum Factors of Safety 1/
Dams having a high or significant hazard potential.

Loading Condition 2/	Factor of Safety 3/
Usual	3.0
Unusual	2.0
Post Earthquake 4/	1.3

Dams having a low hazard potential.

Loading Condition	Factor of Safety
Usual	2.0
Unusual	1.25
Post Earthquake	Greater than 1.0

Notes:

1/ Safety factors apply to the calculation of stress and the Shear Friction Factor of Safety within the structure, at the rock/concrete interface and in the foundation.

2/ Loading conditions as defined in paragraph 3-3.0.

3/ Safety factors should not be calculated for overturning, i.e., M_r / M_0.

4/ For clarification of this load condition, see paragraph 3-4.4.

For definitions of "High", "Significant", and "Low" hazard potential dams, see Chapter 1 of this guideline.

One of the main sources of uncertainty in the analysis of gravity dam stability is the amount of cohesive bond present at the dam foundation interface. The FERC recognizes that cohesive bond is present, but it is very difficult to quantify through borings and testing. It has been the experience of the FERC that borings often fail to

recover intact interface samples for testing. In addition, strengths of intact samples that are recovered exhibit extreme variability. For this reason, table 2A below offers alternative recommended safety factors that can be used if cohesion is not relied upon for stability.

TABLE 2A

Alternate Recommended Minimum Factors of Safety
for Use in Conjunction with a No Cohesion Assumption

Loading Condition	Factor of Safety
Worst Static Case 5/	1.5
Flood if Flood is PMF 6/	1.3
Post Earthquake	1.3

Notes:

5/ The worst static case is defined as the static load case with the lowest factor of safety. It shall be up to the analyst to determine the worst static case and to demonstrate that it truly is the worst static case.

6/ Because the PMF is by definition the flood that will not be exceeded, a lower factor of safety may be tolerated. Therefore if the worst static case is the PMF, a factor of safety of 1.3 is acceptable. If the IDF is not the PMF, then the safety factor for the worst static case shall control.

3-5.2.4 Cracked Base Criteria

For existing structures, theoretical base cracking will be allowed for all loading conditions, provided that the crack stabilizes, the resultant of all forces remains within the base of the dam, and adequate sliding safety factors are obtained. Cohesion may only be assumed on the uncracked portion of the base. Limitations may be necessary on the percentage of base cracking allowed if foundation stresses become high with respect to the strength of the concrete or foundation material.

When remediation is required, the remediation should be designed to attempt to eliminate theoretical base cracking for static load cases.

3-5.3 Safety Factor Evaluation

The safety factors determined in accordance with the previous sections shall be evaluated on a case-by-case basis in order to assess the overall safety of a particular project. Engineering judgment must be used to evaluate any calculated safety factor which does not conform to the recommendations of tables 1, 2 or 2A of section 3-5.2. In applying engineering judgment, consideration must be given to both the adequacy of the data presented in support of the analyses and the loading case for which the safety factor does not meet the criteria.

It is preferable to conservatively define strength parameters and loading conditions than to utilize higher safety factors to accommodate uncertainties in the analysis. Therefore, if the analyst can demonstrate that there is sufficient conservatism in the strength parameters and analysis assumptions, lower factors of safety may be considered adequate on a case by case basis. Any decision to accept safety factors lower than those shown in Table 2A of this chapter will be based on: (1) the degree of uncertainty in the data and analyses provided and (2) the nature of the loading condition, i.e. its probability of exceedance.

In accepting any lower safety factor as outlined herein, the stability analyses must be supported by a program that includes, but is not limited to, adequate field level investigations to define material (dam and foundation) strength parameters, installation and verification of necessary instrumentation to evaluate uplift assumptions and loading conditions, a detailed survey of the condition of the structure, and proper analysis procedures. This program should be submitted for approval by the Director, Division of Dam Safety and Inspections. Flexibility on safety factors beyond that discussed above will be infrequent and on special case-specific consideration.

3-5.4 Foundation Stability

3-5.4.1 Rock Foundations

The foundation or portions of it must be analyzed for stability whenever the structural configuration of the rock is such that direct shear failure is possible, or whenever sliding failure is possible along faults, shears and/or joints. Associated with stability are problems of local over stressing in the dam due to foundation deficiencies. The presence of such weak zones can cause problems under either of two conditions: (1) when differential displacement of rock blocks occurs on either side of weak zones, and (2) when the width of a weak zone represents an excessive span for the dam to bridge over.

Sliding failure may result when the rock foundation contains discontinuities and/or horizontal seams close to the surface. Such discontinuities are particularly dangerous when they contain clay, bentonite, or other similar substances, and when they are adversely oriented.26/ Appropriate foundation investigation and exploration must be done to identify potential adverse features.

3-5.4.2 Soil Foundations

Gravity dams constructed on soil foundations are usually relatively small structures which exert low bearing pressures upon the foundation. Large structures on soil foundations are usually supported by bearing or friction piles. Piles supported structures are addressed in Chapter 10 of these guidelines. When the foundation consists of pervious sands and gravels, such as alluvial deposits, two possible problems exist; one pertains to the amount of underseepage, and the other is concerned with the forces exerted by the seepage. Loss of water through underseepage may be of economic concern for a storage or hydro electric dam but may not adversely affect the safety of the dam. However, adequate measures must be taken to ensure the safety of the dam against failure due to piping, regardless of the economic value of the seepage.

The forces exerted by the water as it flows through the foundation can cause an effective reduction in the weight of the soil at the toe of a dam and result in a lifting of the soil. If uncontrolled, these seepage forces can cause a progressive erosion of the foundation, often referred to as "piping" and allow a sudden collapse of the structure. The design of the erosion, seepage and uplift control measures requires extensive knowledge of type, stratification, permeability, homogeneity, and other properties of the foundation materials.

One way to limit this type of material transport is to insure that the weighted creep ratio is greater than the minimum values shown in Table 3. The weighted creep ratio is defined as the total weighted creep distance L_w , defined in section 3-2.4.4.1, divided by the head differential (HW-TW).

Table 3 17/
Minimum Weighted Creep Ratios, Cw for Various Soils

Very fine sand or silt	8.5
Fine sand	7.0
Medium sand	6.0
Coarse sand	5.0
Fine gravel	4.0
Medium gravel	3.5
Coarse gravel including cobbles	3.0
Boulders with some cobbles and gravel.	2.5

$$C_w = \frac{L_w}{(HW - TW)}$$

Some of the control measures which may be required may include some, all or various combinations of the following devices:

a. Upstream apron, usually with cut offs at the upstream end.

b. Downstream apron, with scour cut offs at the downstream end, and with or without filters and drains under the apron.

c. Cutoffs at the upstream or downstream end or at both ends of the overflow section, with or without filters or drains under the section.

A detailed discussion of these measures and their usages is given in reference 7. For guidance on the evaluation of concrete dams on earth soil foundations, refer to chapter 10 of these guidelines or reference 17.

3-6 Construction Materials

3-6.1 General

The compressive stresses in a concrete in a gravity dam are usually much lower than the compressive strength of the concrete. Therefore compressive strength is rarely an issue. Tensile strength is typically the limiting criteria. It is addressed in section 3-5.2.2 of this chapter.

3-6.2 Site Investigations

During staff review of foundation investigation reports, staff geologists and soils engineers should be consulted concerning the adequacy of the data submitted with respect to defining the structural and geological capability of the foundation. Foundation borings and testing can be helpful in identification of weak zones in the foundation beneath the dam. In addition, construction photographs of the foundation during construction can provide valuable information on the characteristics of the dam/foundation interface and on the orientation of jointing. Specific details concerning geological investigations are contained in Chapter 5 of these guidelines.

3-6.3 Concrete Properties

3-6.3.1 General

Many factors affect the strength and durability of mass concrete. The concrete must be of sufficient strength to safely resist the design loads throughout the life of the structure. Durability of the concrete is required to withstand the effects of weathering (freeze-thaw), chemical action and erosion.

In recent years, the use of Roller Compacted Concrete (RCC) has become increasingly popular as a construction material for new gravity dams, to repair existing concrete structures and to armor existing embankment dams against overtopping events. While RCC used to construct gravity dams should have the same general properties as conventional mass concrete, there are some differences which must be considered. For example, the construction of roller compacted concrete results in horizontal lifts joints at about 1 foot spacing. The potential for failure along these lift joints due to lower strength and higher permeability must be considered. More information on RCC dams can be found in references 2, 11, and 24.

3-6.3.2 Structural Properties

Stresses in a gravity dam are usually low; therefore, concrete of moderate strength is generally sufficient to withstand design loads. Laboratory tests are often unnecessary if conservative assumptions on concrete strength result in adequate factors of safety. Tests can be performed if concrete parameters are in question.

For existing structures, non-destructive acoustic testing techniques have proven valuable for the qualitative evaluation of concrete strength and continuity. Drilling and testing can also be performed. Drilling and testing should be used to correlate concrete strength with acoustic wave velocities.

Staff review of these tests should compare the laboratory results to the original design assumptions, and should examine the testing procedures to determine if the tests were conducted in conformance with recommended ASTM and ACI procedures as listed below:

a. Compressive tests: ASTM-C39

b. Tensile tests: ASTM C78

c. Shear tests: RTH 203-80 23/

d. Modulus of elasticity, Static: ASTM C469, Dynamic: ASTM C215

e. Poisson's ratio: ASTM C469

f. Collection of test samples: ASTM C31, C172, and C192

g. Evaluation of test results: ACI 214

Additional guidance concerning the design of mass concrete mixes and the determination of the cured properties of the concrete are presented in reference 17.

3-6.3.3 Durability

The durability of concrete or RCC is influenced by the physical nature of the component parts, and although performance is largely influenced by mix proportions and degree of compaction, the aggregates constitute nearly 85 percent of the constituents in a mass concrete and good aggregates are essential for durable concrete. The environment in which the structure will exist must be considered in the mix design and in the evaluation of the suitability of aggregate sources proposed for use in the mix. Generally, the environmental considerations which must be examined are: weathering due to freezing and thawing cycles; chemical attack from reactions between the elements in the concrete, exposure to acid waters, exposure to sulfates in water and leaching by mineral-free water; and erosion due to cavitation or the movement of abrasive material in flowing water.

3-6.3.4 Dynamic Properties

The compressive and tensile strengths of concrete vary with the speed of testing. As the rate of loading increases compressive and tensile strengths and modulus of elasticity also increase, therefore, these properties of concrete under dynamic loadings such as during an earthquake are greater than under static conditions.

References 16 and 18 provide a detailed discussion of the rates and types of testing which should be conducted to determine the dynamic properties of concrete for use in linear finite element analyses. The rates of testing should be coordinated with the expected stress cycles of the design seismic event.

3-6.4 Foundation Properties

In many instances, a gravity dam is keyed into the foundation so that the foundation will normally be adequate if it has enough bearing capacity to resist the loads from the dam. If, however, weak planes or zones of inferior rock are present within the foundation, the stability of the dam will be governed by the sliding resistance of the foundation. The foundation investigations should follow the recommendations of Chapter 5 of these guidelines, and should establish the following strength parameters for use in stability and stress analyses:

a. Shear strengths along any discontinuities and the intact rock.

b. Bearing capacity (compressive strength).

c. Deformation Modulus of the rock mass.

d. Poisson's ratio of the rock mass.

These parameters are usually established by laboratory tests on samples obtained at the site. In some instances, in situ testing may be justified. In either instance, it is important that samples and testing methods be representative of the site conditions. The results of these tests will, generally, yield ultimate strength or peak values and must, therefore, be divided by the appropriate factors of safety in order to obtain the allowable working stresses. Recommended factors of safety are presented in table 2 of section 3-5.2.

Foundation permeability tests may be helpful in conjunction with the drilling program, or as a separate study, in order to establish uplift parameters and to design an appropriate drainage system. Permeability testing programs should be designed to

establish the permeability of the rock mass and not an isolated sample of the rock material. The mass permeability will usually be higher, due to jointing and faulting, than an individual sample.

Prior to the selection of representative foundation properties, all available geologic and foundation information should be reviewed for descriptions of the type of material and structural formation on which the dam was constructed. A general description of the foundation material can be used as a basis for choosing a range of allowable strengths from published data, if testing data is not available. Staff geologists should be consulted if the available information refers to material parameters or structural features which are suspected to be indications of poor foundation conditions. Situations which should alert the engineer to possible problem areas are listed below:

a. Low RQD ratio (RQD = Rock Quality Designation).

b. Solution features such as caves, sinkholes and fissures.

c. Columnar jointing.

d. Closely spaced or weak horizontal seams or bedding planes.

e. Highly weathered and/or fractured material.

f. Shear zones or faults and adversely oriented joints.

g. Joints or bedding planes described as slickensided, or filled with gouge materials such as bentonite or other swelling clays.

h. Foliation surfaces.

i. Drill fluid loss.

j. Large water takes during pumping tests.

k. Large grout takes.

l. Rapid penetration rate during drilling.

Compressive - In general, the compressive strength of a rock foundation will be greater than the compressive strength of the concrete within the dam. Therefore, crushing (or compressive failure) of the concrete will usually occur prior to compression failure of

the foundation material. When testing information is not available this can be assumed, and the allowable compressive strength of the rock may be taken as equal to that of the concrete. However, if testing data is available, the safety factors from Table 2 should be applied to the ultimate compressive strength to determine the allowable stress. Where the foundation rock is nonhomogeneous, tests should be performed on each type of rock in the foundation.

Tensile - A determination of tensile strength of the rock is seldom required because unhealed joints, shears, etc., cannot transmit tensile stress within the foundation. Therefore, the allowable tensile strength for the foundation should be assumed to be zero.

Shear - Resistance to shear within the foundation and between the dam and its foundation depends upon the zero normal stress shear strength (cohesion) and internal friction inherent in the foundation materials, and in the bond between concrete and rock at the contact surface. Ideally, these properties are determined in the laboratory by triaxial and direct shear tests on samples taken during construction, during a post-construction drilling program, or in the field through insitu testing. The possible sliding surface may consist of several different materials, some intact and some fractured. Intact rock reaches its maximum break bond resistance with less deformation than is necessary for fractured materials to develop their maximum frictional resistances. Therefore, the shear resistance developed by each fractured material depends upon the displacement of the intact rock part of the surface. This raises several issues, including strain compatibility, point crushing strength, creep, and progressive failure which must be considered in the selection of reasonable shear strength parameters. The shear resistance versus normal load relationship for each material along the potential sliding plane should be determined by testing wherever possible. Staff geotechnical engineers should be consulted concerning the adequacy of any foundation evaluation program and the interpretation of test results.

In many cases, photographic records of the foundation before and during construction are very useful in estimating overall foundation contact shear strength. Large scale roughness which interrupts shear planes can force a shear through rock or shear through concrete situation, justifying apparent cohesion, or much higher friction angles than small sample testing would indicate. The reviewer should be aware however, that there may be one "weak link" in the foundation. If large scale asperities prohibit sliding along the interface between concrete and rock, attention should be focused on other area, such as planar concrete lift joints, or adversely oriented rock joints beneath the dam.

3-7 References

1. American Concrete Institute, "Building Code Requirements for Reinforced Concrete", ACI-318-95

2. American Concrete Institute, "Roller Compacted Concrete", ACI 207.5R-80.

3. Brand, B., Nappe Pressures on Gravity Dam Spillways, Dam Engineering Vol X, Issue 2 , August 1999

4. Bureau of Reclamation, "Cavitation in Chutes and Spillways" Engineering Monograph No. 42, 1990

5. Bureau of Reclamation, "Design of Small Dams", 1974 edition.

6. Cannon, Robert W.,"Design Considerations for Roller Compacted Concrete and Rollcrete in Dams", Concrete International Magazine, Dec. 1985.

7. Cedergren, Harry R., "Seepage, Drainage and Flow Nets", John Wiley & Sons, 2nd Ed.

8. Chopra, A. K., Fenves, G.,"Simplified Earthquake Analysis of Concrete Gravity Dams," ASCE Structural Journal August 1987.

9. Clough, Ray W., "The Finite Element Method in Plane Stress Analysis", ASCE Conference Papers, Sept. 1960.

10. "Handbook of Dam Engineering", A. R. Golze (editor), Van Nostrand Reinhold Co., C 1977.

11. Hansen, K. D. & Reinhardt, W.G., "Roller Compacted Concrete Dams" 1991, McGraw-Hill

12. Housner, G. W., "The Behavior of Inverted Pendulum Structures During Earthquakes" Bulletin of the Seismological Society of America, Vol 53, February 1963.

13. Jansen, R. B., "Advanced Dam Engineering" 1988, Van Nostrand Reinhold

14. Lund, Boggs, & Daley, "Soda Dam: Influence of Reservoir Silt Deposits on Uplift Load" Proceedings of the International Conference on Hydropower, 1993

15. Newmark. N. M. and Rosenblueth, E. Fundamentals of Earthquake Engineering," Prentice Hall, 1971.

16. Raphael, J. M., "Tensile Strength of Concrete", Journal of The American Concrete Institute, Mar/Apr 1984, p158.

17. Terzaghi & Peck, "Soil Mechanics in Engineering Practice," John Wiley & Sons, copyright 1948. 2nd Edition.

18. U. S. Army Corps of Engineers, "Earthquake Design and Analysis for Corps of Engineers Dams", ER-1110-2-1806, April 30, 1977.

19. U. S. Army Corps of Engineers, "Gravity Dam Design". EM-1110-2-2200, June 1995.

20. U. S. Army Corps of Engineers, EM-1110-2-1603 "Hydraulic Design of Spillways," 31 March 1990.

21. U. S. Army Corps of Engineers, EM-1110-2-1612 "Ice Engineering" 15 October 1982.

22. U. S. Army Corps of Engineers, EM-1110-2-2502, "Retaining Walls," 29 May 1989.

23. U. S. Army Corps of Engineers, "Rock Testing Handbook (Standard and Recommended Methods)" August 1980.

24. US Army Corps of Engineers, EM 1110-2-2006, "Roller Compacted Concrete", 20 August 1985.

25. U. S. Army Corps of Engineers, EM 1110-2-1901 "Soil Mechanics Design," Ch. 1, Seepage Control, February 1952.

26. USCOLD "Anthology of Dam Modification Case Histories", April 1996 - Morris Sheppard Dam

27. Westerdaard, W. M. ,"Water Pressures on Dams During Earthquakes", Transactions ASCE, Vol 98, 1933.

28. Wiegel, R. L., "Earthquake Engineering" 1970, Prentice-Hall

29. Zienkiewicz, O. C., "The Finite Element in Structural and Continuum Mechanics", McGraw-Hill, London.

APPENDIX 3A
NAPPE PRESSURES

This appendix presents a simplified method for the determination of nappe pressures given the following assumptions:

1) Streamlines are concentric and parallel to the spillway surface.

2) The curvature of streamlines changes gradually with respect to distance along the streamline.

3) Flow is irrotational.

4) Energy is not dissipated by friction or aeration.

Figure 1A shows that the velocity and pressure exerted by the water are a function of position and spillway curvature. The generalized equation for unit discharge is shown below 3/:

$$q = -\sqrt{2g}\sqrt{(E-Y-A\sin(\phi))}(1-\kappa A)\frac{1}{\kappa}Log_e(1-\kappa A) \qquad Eq.\ 1$$

Where:

q= Unit discharge

E= Total Energy

Y= Elevation of the point on the spillway under consideration

A= Depth of flow measured perpendicular to the spillway surface

ϕ= The angle of the outward directed normal to the spillway with respect to horizontal

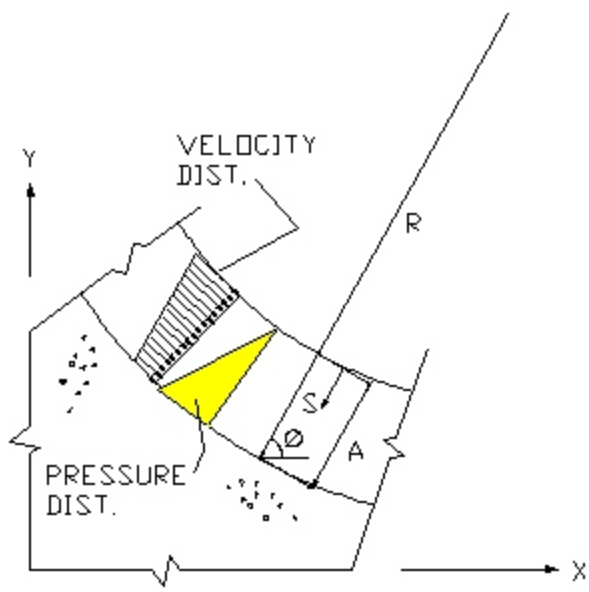

Figure 1A

κ= Curvature of spillway surface at point under consideration, Positive for flip buckets, negative for crests

For a given q, equation 1 can be solved for A. A numerical procedure is required. With the flow depth A at a point determined, the velocity of flow at the spillway surface can be found using equation 2:

$$V_s = \sqrt{2g}(1-\kappa A)\sqrt{E-Y-ASin(\phi)} \qquad Eq.\ 2$$

The pressure head at the spillway surface is then:

$$H_s = E-Y-\frac{V_s^2}{2g} \qquad Eq.\ 3$$

Using equations 1, 2, and 3, the pressure at any point on a spillway by the overflowing nappe can be determined. Figure 2A shows the application of this procedure to a typical overflow spillway section. Note that at the design discharge, the nappe exerts almost no pressure on the downstream face of the dam until flow direction is changed by the bucket. Bucket pressures are large, and tend to overturn the dam since they are exerted downstream of the base centroid. Crest pressures are typically small and can be negative. When they are negative, they also tend to overturn the dam.

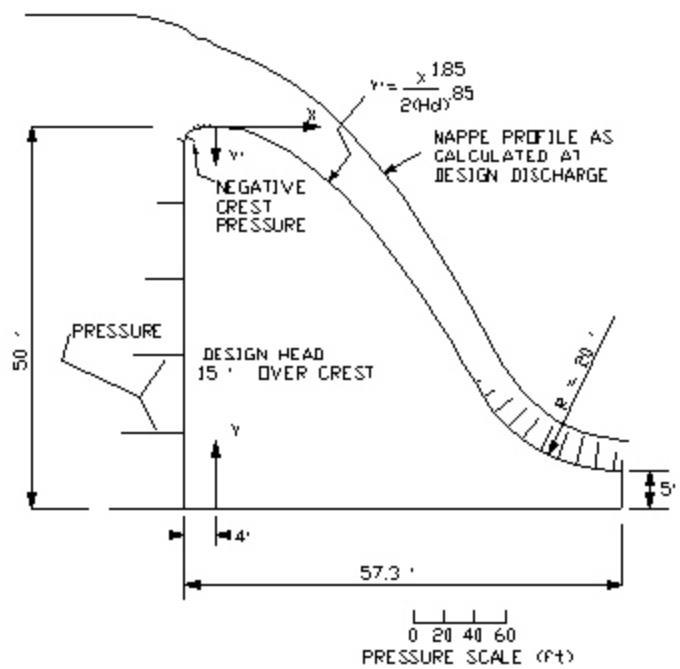

Figure 2A

The net external hydraulic resultant forces are as follows:

F_X = 97.5 kips (Downstream) @ Y= 21.6'

F_Y = 28.4 kips (downward) @ X= 43.6'

Note that the net nappe force on the dam is totally independent of the tailwater elevation. This is a consequence of the fact that flow downstream of the crest is super-critical, and thus not subject to downstream control. This is true as long as the tailwater elevation is less than the conjugate depth.

Further treatment of hydrodynamic effects is given in reference 3.

APPENDIX 3B
ROCKING RESPONSE OF BLOCKS

This appendix describes a method for the investigation of the response of rigid blocks in response to seismic excitation. Dynamic moment equilibrium of the block shown in figure 1B requires the satisfaction of equation 1.

$$M \cdot \left[A_B + R \cdot COS(\alpha - \phi) \cdot \frac{\partial^2 \phi}{\partial t^2} \right] \cdot R \cdot COS(\alpha - \phi) +$$

$$M \cdot R \cdot SIN(\alpha - \phi) \cdot \frac{\partial^2 \phi}{\partial t^2} \cdot R \cdot SIN(\alpha - \phi) +$$

$$W \cdot R \cdot SIN(\alpha - \phi) + \tfrac{1}{6} \gamma_w d^3 + HydroDyne = 0$$

EQ 1

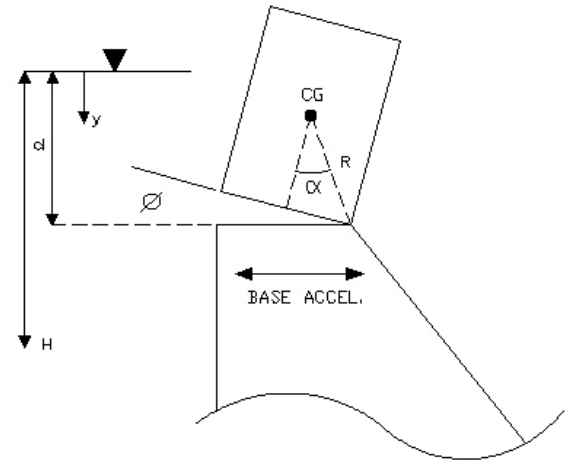

Figure 1B

Where:

A_B Acceleration of the block base. This is the ground acceleration if the block is sitting on the ground. It is the acceleration modified by structural response if the block is sitting on top of a structure.

W Weight of the block.

M Mass of the block.

γ_w ρ_w Weight and mass density of water.

R, α, ϕ and d are as shown in figure 1B

The first term of the equation represents the moment about the pivot point produced by horizontal forces resulting from horizontal acceleration of the center of gravity of the block. The second term represents the moment about the pivot point produced by vertical accelerations of the center of gravity of the block. The third term represents the static moment produced by the weight of the block. The fourth term represents the static moment produced by the reservoir. The HydroDyne term represents the moments produced by hydrodynamic reservoir pressure. There are 2 components of the HydroDyne term, one due to the horizontal acceleration of the dam and one due to the rotational acceleration of the block.

$$Hydrodyne = A_B \rho_w \sum_{i=1,3,5}^{\infty} K1_i \cdot C_i \quad + \quad \frac{\partial^2 \phi}{\partial \phi^2} \rho_w \sum_{i=1,3,5}^{\infty} K2_i \cdot C_i \qquad \text{EQ 2}$$

Where:

$$K1_i = \frac{8H}{(\pi i)^2}$$

$$K2_i = \left[\frac{2d}{(\pi i)^2} - \frac{4H}{(\pi i)^3} SIN(\frac{\pi i d}{2H}) \right]$$

$$C_i = \left[\frac{2dH}{(\pi i)} - \frac{4H^2}{(\pi i)^2} SIN(\frac{\pi i d}{2H}) \right]$$

Equation 1 and 2 can be combined as shown below:

$$A_B \left[M \cdot R \cdot COS(\alpha - \phi) + \rho_w \sum_{i=1,3,5}^{\infty} K1_i \cdot C_i \right] +$$

$$\frac{\partial^2 \phi}{\partial t^2} \cdot \left[\rho_c I_p + \rho_w \sum_{i=1,3,5}^{\infty} K2_i \cdot C_i \right] + \qquad \text{EQ 3}$$

$$W \cdot R \cdot SIN(\alpha - \phi) \quad + \quad \tfrac{1}{6} \gamma_w d^3 \quad = \quad 0$$

Where I_p is the polar moment of inertia about the pivot point and ρ_c. is the mass density of concrete.

Equation 3 can be solved numerically. Each time the block rocks from one pivot point to another, equation 3 must be modified accordingly. In addition, significant energy loss occurs each time the block changes pivot points 12/. Figure 2B shows the application of this technique for a top block rocking in response to a sinusoidal block base acceleration of 3 Gs at various frequencies. In this case, the block is not subject to reservoir forces.

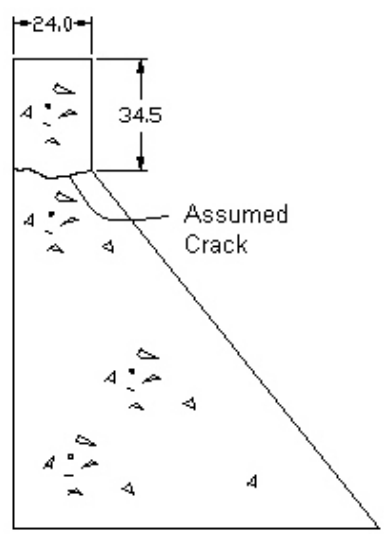

Figure 2B

As can be seen, excitation frequency has a large effect on the stability of a rocking block.

The result of these analyses is often a finding that while seismic forces may crack the concrete, they can not topple the free blocks that result.

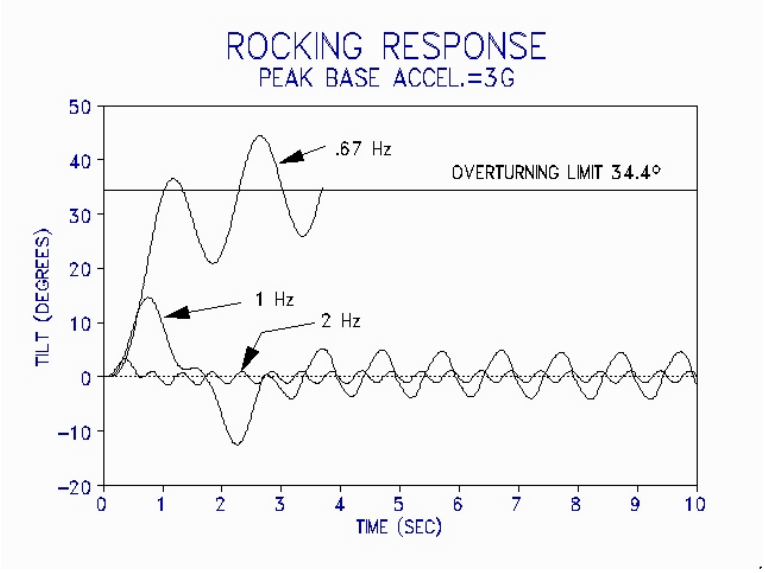

Figure 3B

APPENDIX C

EXAMPLE GRAVITY ANALYSIS

Relevant parameters are as follows:

Unit Weight of Concrete γ
.150 kcf

Friction Angle ϕ
45˚

Drain Effectiveness E
50%

Slope of Dam Foundation α
-7.125˚

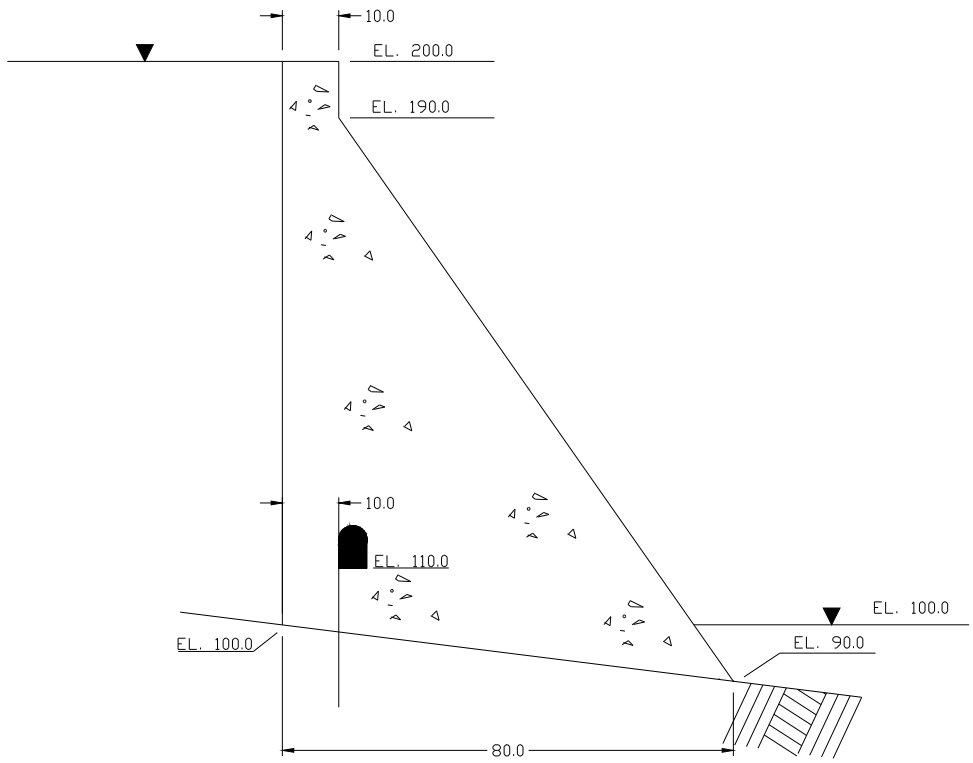

Figure 1C

DETERMINATION OF CRACK LENGTH

Initially assume that the base of the dam is not cracked, and that the uplift is distributed as shown in figure 5 of this chapter, with T=0.

The location of the dam with respect to vertical and horizontal datum is unimportant. To illustrate this point, the global coordinate system will not be placed at the toe of the dam. The forces applied to the dam are as shown in figure 2-c.

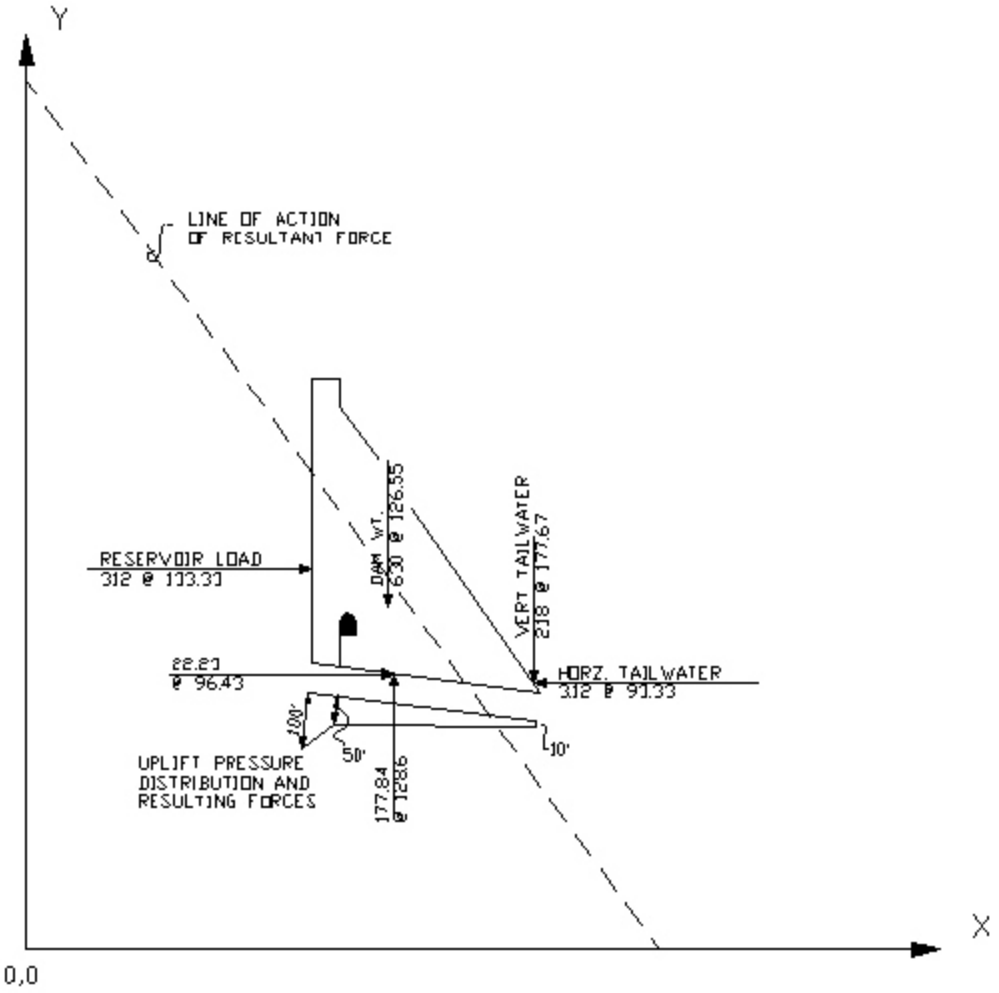

Figure 2C

ITERATION # 1, ASSUMED CRACK LENGTH= 0

FORCE DESCRIPTION	F->	ARM	F^	ARM	M @ 0,0
DAM DEAD LOAD-->			-630.00	126.55	79725.00
RESERVOIR LOAD-->	312.00	133.33			41600.00
TAILWATER LOAD-->	-3.12	93.33	-2.18	177.67	96.82
UPLIFT-->	22.23	96.43	177.84	128.60	-20726.06
TOTAL FORCE =	331.11		-454.34		100695.77

RESULTANT LINE Y AXIS INTERCEPT @ 304.1158, X AXIS INTERCEPT @ 221.6289
RESULTANT INTERSECTS BASE @ 153.64 , 93.30

The horizontal distance from the toe of the dam to the resultant/base intersection point is:

$$180 - 153.64 = 26.36'$$

Since the base pressure distribution is assumed to be triangular, the resultant acts at the 1/3 point of the base pressure distribution. Thus the length of the base pressure distribution is:

$$3*26.36 = 79.08'$$

Note that 79.08' is less than the horizontal base length (80'), and therefore a crack must be assumed to initiate at the dam heel. This crack will effect the uplift distribution since it must be assumed that full reservoir head will occur along the crack length.

The new crack length can be assumed to be the difference between the full base length and the length of the base pressure distribution, and the proceedure repeated. The process concludes when the assumed crack length no longer changes. Figure 3-C shows the results of the final iteration.

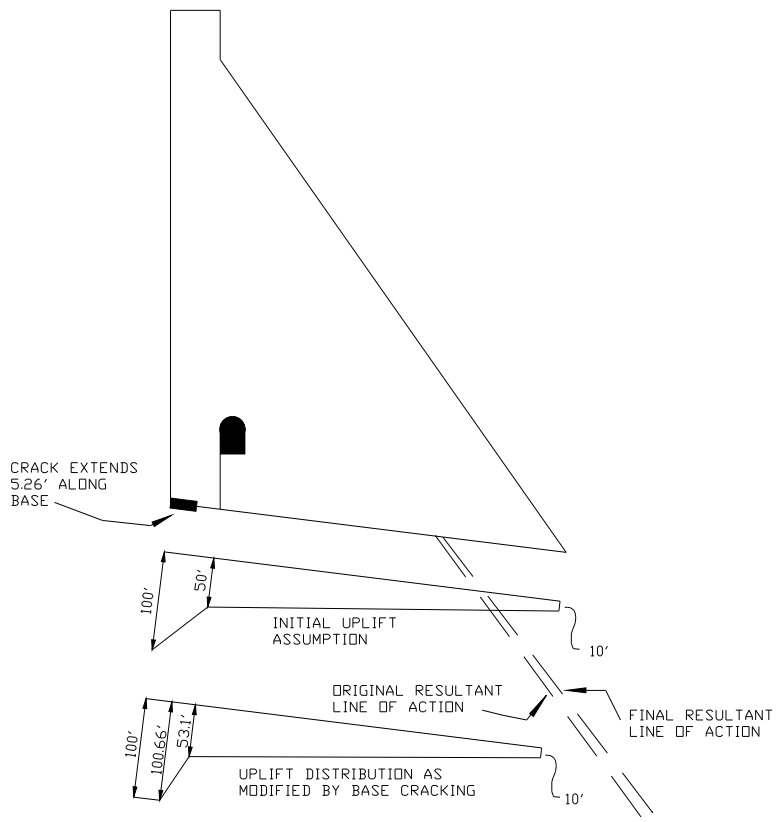

Figure 3C

ASSUMED CRACK LENGTH= 5.26

FORCE DESCRIPTION	F->	ARM	F^	ARM	M @ 0,0
DAM DEAD LOAD-->			-630.00	126.55	79725.00
RESERVOIR LOAD-->	312.00	133.33			41600.00
TAILWATER LOAD-->	-3.12	93.33	-2.18	177.67	96.82
UPLIFT-->	24.17	96.54	193.33	127.70	-22354.66
TOTAL FORCE =	333.05		-438.85		99067.17

RESULTANT LINE Y AXIS INTERCEPT 297.46, X AXIS INTERCEPT 225.74
RESULTANT INTERSECTS BASE @ 155.075 , 93.12

As can be seen, the change in uplift force resulting from a different crack assumption caused the location of the resultant/base intersection to change. The horizontal distance from the toe of the dam to the resultant/base intersection point is:

$$180 - 155.75 = 24.92'$$

The length of the base in compression is:

$$3*24.925 = 74.775'$$

The new horizontal crack length is:

$$80 - 74.775 = 5.225'$$

The new crack length as measured along the base is:

$$5.225*\frac{\sqrt{(80^2+10^2)}}{80} = 5.27$$

The difference between the assumed crack length of 5.26 and 5.27 is negligible, indicating that the correct crack length has been determined within a to lerance of .01'.

DETERMINATION OF SLIDING STABILITY

With the crack length and uplift forces determined, the sliding stability calculation proceeds as follows:

The angle of the resultant force with respect to the vertical is:

$$ARCTAN\left(\frac{\sum F_X}{\sum F_Y}\right) = ARCTAN\left(\frac{333.05}{438.85}\right) = 37.2^0$$

The failure cone of the dam/foundation interface is shown in figure 4-C. The factor safety for sliding is defined as:

$$\frac{TAN(\phi+\alpha)}{TAN(RESULTANT\ ANGLE)} = \frac{\sum F_Y * TAN(\phi+\alpha)}{\sum F_x}$$

In this example, this results in:

$$\frac{438.85 * TAN(45^0 - 7.125^0)}{333.05} = 1.02$$

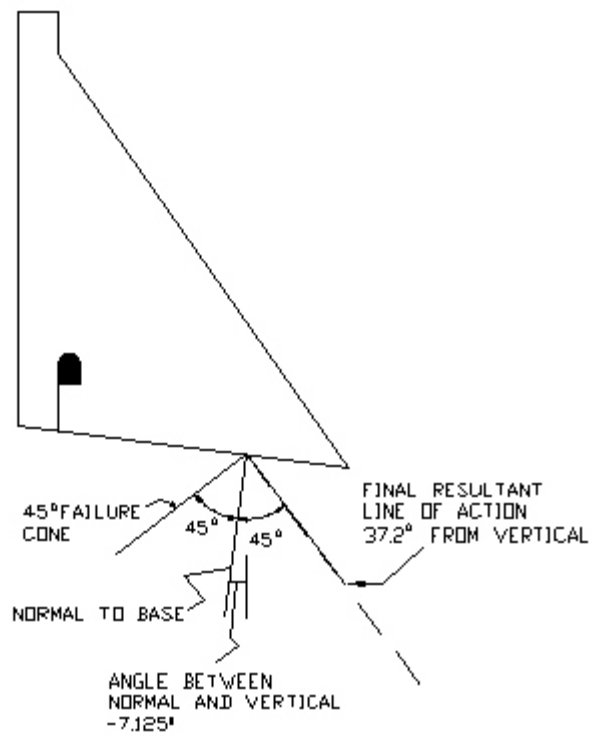

Figure 4C

APPENDIX 3D
Dynamic & Post Earthquake Analysis

The flow chart below depicts the seismic analysis process applicable to concrete gravity dams.

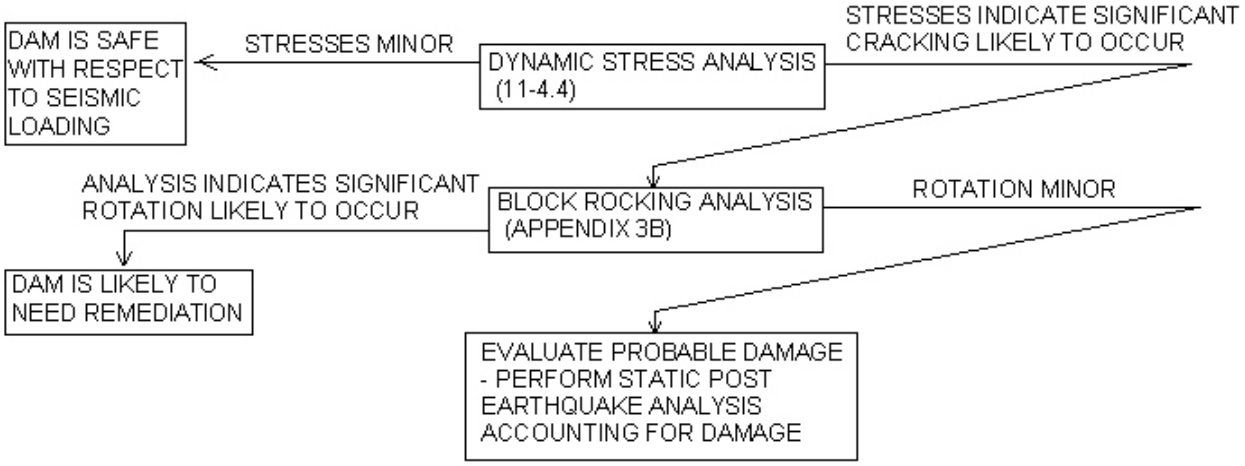

EXAMPLE

1. Dynamic Stress Analysis

The dynamic analysis of the RCC dam depicted below indicates that seismic stresses in the vertical direction (across RCC lift joints) is approximately 4 times the lift joint tensile strength when subjected to a .6g base excitation. The large top block of the non-overflow section is of special concern. In all probability, the lift joint at elevation 7175.5 will fail in tension and the block will begin to rock back and forth in response to seismic ground motion.

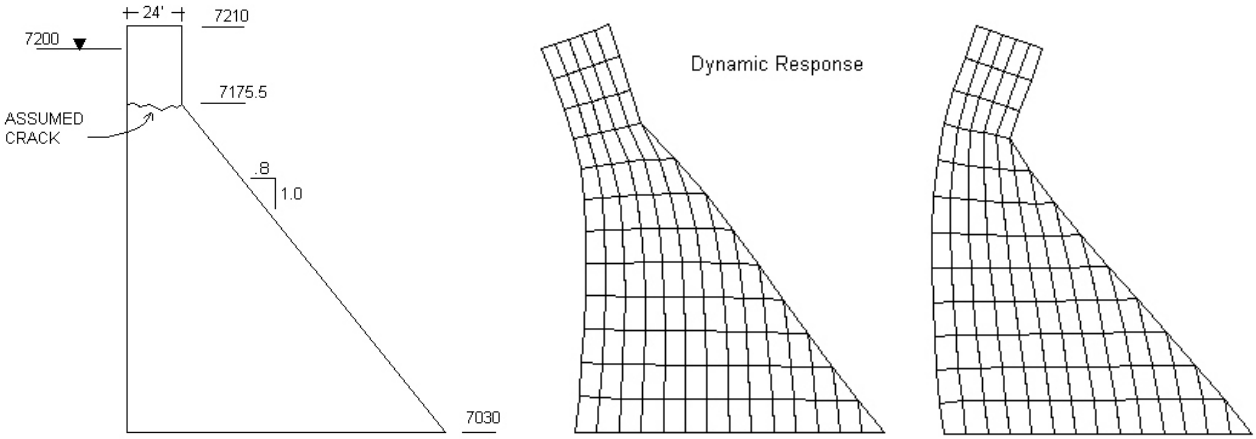

2. Block Rocking Analysis

The dynamic stress analysis indicates that there is a likelihood of tensile lift joint failure. Rather than try to quantify how much cracking will occur, block rocking analysis assumes that the base of the block is completely broken and that the block is free to pivot about either upstream or downstream corner. The free block rocking analysis is described in Appendix 3B. The .6g base acceleration will be amplified by the response of the structure. To account for this, the free block will be subjected to a sinusoidal base acceleration of twice the .6g dam base acceleration.

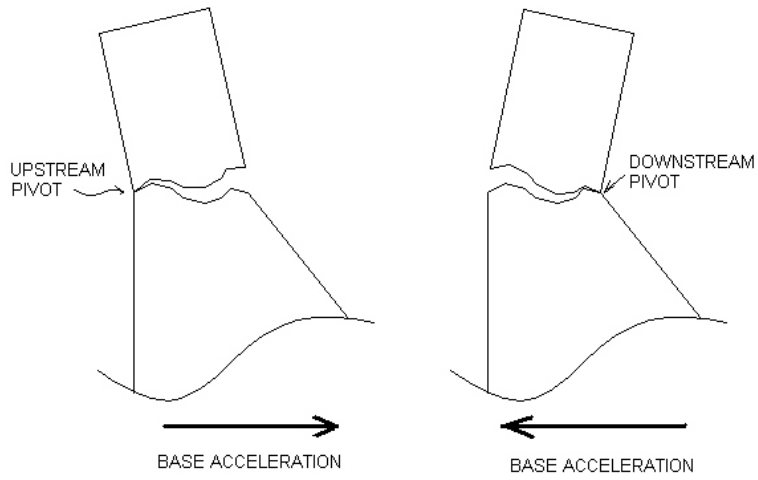

The response of the block subjected to 1.2 g sinusoidal acceleration is depicted below. Time history analysis of the dam can be used to provide a block base accelerogram, however, a continuous sinusoidal excitation with an amplitude equal to the structurally amplified peak ground acceleration is conservative. 2 hz was selected for a sample excitation frequency for this example. Typically, several excitation frequencies should be used to check the sensitivity of the result to frequency.

As can be seen, the block subjected to excitation of this type will experience significant rocking. The adjacent figure shows that the crest will tilt downstream as far as .9' and upstream as far as .5'. (Upstream deflections are positive) However, the block will not topple .

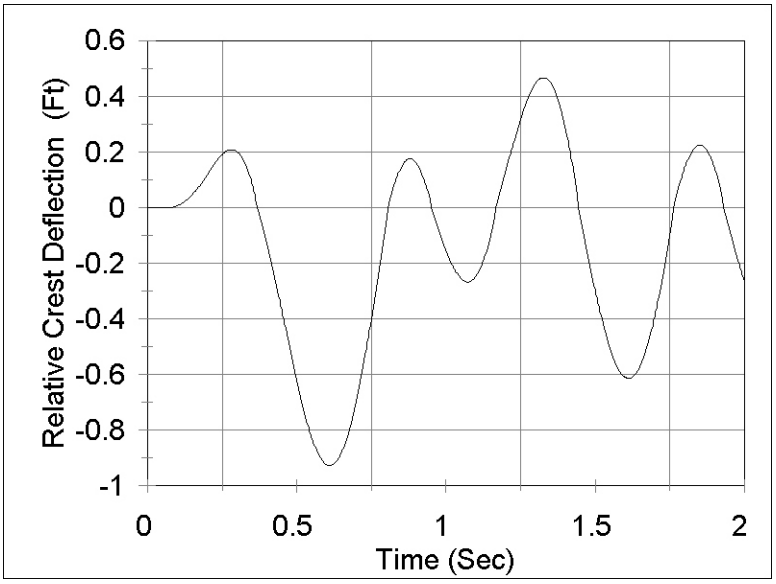

3. Post Earthquake Stability Analysis

Since the block rocking analysis shows that significant rocking could take place, the block must be analyzed to determine if it can still resist static loads in a damaged condition. For the post earthquake analysis, a residual shear strength of 30˚ with no cohesion will be assumed. Stability analysis procedures are outlined in Appendix 3C.

FORCE DESCRIPTION	F->	ARM	F^	ARM	M @ 0,0
DAM DEAD LOAD-->			-124.20	12.00	1490.40
RESERVOIR LOAD-->	18.73	183.67			3439.67
UPLIFT-->			18.35	8.00	-146.78
TOTAL FORCE =	18.73		-105.85		4783.30

CRACK LENGTH= 0 100 % OF BASE IN COMPRESSION

HEEL OR CRACK TIP STRESS= -2.053036 TOE STRESS= -6.768102 (KSF)

SLIDING SAFETY FACTOR= 3.263296

The analyses above indicate that while significant seismic damage may occur, the as-damaged top block will continue to maintain the reservoir.