# Appendix E

# Construction and Restoration Procedures

# Appendix E1

## Millennium Pipeline Project – Phase I (and Columbia Line A-5 Replacement)

- **Millennium Environmental Construction Standards**
- **Horizontal Directional Drill Contingency Plan for the Ramapo River Valley Crossing**

# MILLENNIUM PIPELINE PROJECT

## ENVIRONMENTAL CONSTRUCTION STANDARDS

Millennium Pipeline Company, L.P.

August 2005

# TABLE OF CONTENTS


Page

I. INTRODUCTION ..... 1

II. UPLAND CONSTRUCTION ..... 1

A. GENERAL ..... 1

B. RIGHT-OF-WAY WIDTH ..... 2

C. CLEARING ..... 2

1. Wood Products ..... 2
2. Brush ..... 3
3. Fence Crossings ..... 3

D. GRADING ..... 3

1. Tree Stump and Rock Removal/Disposal ..... 3
2. Topsoil Conservation in Non-agricultural Areas ..... 4
3. Erosion Control Devices Installed During Grading ..... 4
4. Temporary Road Entrances ..... 4

E. ACCESS ROADS ..... 5

F. RESIDENTIAL AREAS ..... 5

G. TRAILS ..... 6

H. TRENCHING ..... 6

1. Trenching Specifications ..... 6
2. Blasting ..... 7
3. Temporary Construction Access Over the Trenchline ..... 7

I. BACKFILLING SPECIFICATIONS ..... 7

J. FINAL GRADING, RESTORATION AND STABILIZATION ..... 8

1. Final Grading ..... 8
2. Restoration ..... 9
3. Temporary Stabilization Measures ..... 9
4. Restoring Man-Made Structures ..... 10
5. Off-Road Vehicle Control ..... 10

## TABLE OF CONTENTS (continued)

**Page**

**K. NOISE IMPACT MITIGATION** ..... 10

**L. HYDROSTATIC TESTING** ..... 10

**III. AGRICULTURAL CONSTRUCTION** ..... 11

**A. GENERAL** ..... 11

**B. TOPSOIL CONSERVATION** ..... 12

**C. SUBSOIL CONSERVATION** ..... 13

**D. BACKFILLING** ..... 13

**E. SOIL DECOMPACTION** ..... 13

**F. RESTORATION** ..... 14

**G. DRAINAGE TILE AND IRRIGATION FACILITIES** ..... 14

**H. MONITORING** ..... 14

**IV. STREAM AND WETLAND CROSSINGS** ..... 15

**A. STREAM CROSSINGS** ..... 15

1. **General** ..... 15
2. **Crossing Techniques** ..... 16
3. **Clearing** ..... 16
4. **Grading** ..... 16
5. **Trenching** ..... 16
6. **Blasting** ..... 17
7. **Backfilling** ..... 17
8. **Restoration** ..... 17

**B. WETLAND CROSSINGS** ..... 18

1. **General** ..... 18
2. **Crossing Techniques** ..... 19
3. **Clearing** ..... 19
4. **Grading** ..... 20
5. **Trenching** ..... 20
6. **Blasting** ..... 20
7. **Backfilling** ..... 20
8. **Restoration** ..... 21

## TABLE OF CONTENTS (continued)

**Page**

**V. SPILL PREVENTION, CONTAINMENT AND CONTROL** ..... 21

**A. GENERAL** ..... 21

**B. SPILL CLEANUP** ..... 23

**VI. MAINTENANCE** ..... 23

**A. GENERAL** ..... 23

**B. UPLAND AREAS** ..... 24

**C. WATERBODIES, WETLANDS, AND ENVIRONMENTALLY SENSITIVE AREAS** ..... 24

**VII. ENVIRONMENTAL CONSTRUCTION MANAGEMENT AND INSPECTION** ..... 25

**A. GENERAL** ..... 25

**B. ENVIRONMENTAL INSPECTOR** ..... 25

**C. AGRICULTURAL INSPECTOR** ..... 26

**D. LEAD ENVIRONMENTAL SPECIALIST** ..... 27

**E. ENVIRONMENTAL TRAINING** ..... 27

**F. CONTRACTOR'S ENVIRONMENTAL COMPLIANCE SPECIALIST** ..... 27

**G. ENVIRONMENTAL CONSTRUCTION MANAGEMENT** ..... 27

**H. ENVIRONMENTAL VARIANCES** ..... 28

**VIII. EMERGENCY CONSTRUCTION** ..... 28

**ATTACHMENTS**

# I. INTRODUCTION

***Millennium*** is committed to complying with the applicable environmental rules and regulations of federal, state, and local governments. Millennium's goal is to meet these requirements in the pursuit of a cleaner, safer environment for future operations.

Recognizing this goal, it is Millennium's policy that all construction, operation and maintenance activities be conducted in a safe manner that minimizes impacts on stream and wetland ecosystems, agricultural areas, wildlife habitat, cultural resources, and the human environment. To this end, Millennium has prepared these Environmental Construction Standards (***ECS***). The ECS is based upon FERC's January 2003 Plan and Procedures and includes those requirements (by reference) as a minimum standard. The ECS also provides additional supplemental requirements that together with the FERC standards are the minimum requirements to be applied to all construction, operation, and maintenance activities for the Millennium Project.

The general objective of this ECS is to provide Millennium's personnel and contractors with instructional information, complete with a practical approach to environmental concerns that can arise before, during, and after facility construction. More specific objectives include:

- minimize impacts to environmentally sensitive areas;
- use the minimum land required for safe and efficient construction, operation, and maintenance of the facilities;
- adhere to applicable erosion and sedimentation policies during construction; and
- complete construction in a safe and timely manner.

Words and/or phrases that have special meaning (shown in ***bold*** at first occurrence in text) and acronyms have been defined in table 1.

The intent of the ECS is to confine project-related disturbance to the identified construction work area (***CWA***) and to minimize erosion and enhance revegetation in those areas. Any project-related ground disturbance (including erosion) outside of these areas is subject to compliance with all applicable survey and mitigation requirements.

This ECS is the base document from which Millennium developed the construction alignment sheets (***CAS***). The CAS include written recommendations from the state and local soil conservation authorities or land management agencies for temporary and permanent erosion control, revegetation specifications, and mitigation.

# II. UPLAND CONSTRUCTION

## A. GENERAL

The ***upland construction*** spread operates as a moving assembly line performing specialized procedures in an efficient, planned sequence. Figure 1 presents this typical upland pipeline construction sequence. In addition, special construction crews install and alter fences, bore under major roads and railroads, install stream and ***wetland*** crossings that are not done

by conventional upland techniques, and construct valve settings and meter and regulator stations.

Specific standards for agricultural lands, streams, and wetlands are provided in Section III, Agricultural Construction and Section IV, Stream and Wetland Crossings, respectively.

While construction work is on-going, the CWA will be kept clean of all rubbish and debris resulting from the work. Non-hazardous materials and waste will be disposed of in an approved landfill. Hazardous materials and waste will be disposed of in accordance with all applicable Millennium policies and federal, state, and local regulations.

## B. RIGHT-OF-WAY WIDTH

Millennium will obtain and use a 50-foot wide permanent right-of-way (***ROW***) and typically a 25-foot wide temporary construction ROW as illustrated in figure 2. In addition, where the pipeline is located adjacent to an existing Columbia Gas Transmission Corp. pipeline, the existing cleared ROW may be used for excess spoil storage and travel by light-duty rubber tired vehicles. After the CWA is restored, the temporary work areas are allowed to revert to their previous uses and ownership. The permanent ROW is maintained as Millennium's permanent ROW for the facility. Figure 2 also illustrates the typical pipeline CWA when paralleling existing facilities.

In addition, there may be instances where extra work areas are needed for topsoil conservation, sidling construction, stream, river, and highway crossings, equipment staging, pipe and material storage, temporary and permanent access, and related construction activities. These areas are identified on the CAS.

## C. CLEARING

The CWA is cleared to the width specified in the ROW agreements or CAS, whichever is less. During clearing operations, all brush and trees will be felled into the CWA to prevent off-CWA damage to trees and structures.

Large or valuable trees may be retained as specified in the ***easement agreement***, provided they will not interfere with the safe construction, operation, or maintenance of the facility.

The clearing crew and related equipment will be permitted a single pass through streams prior to equipment crossing installations unless the stream is ***high quality***.

### 1. Wood Products

Wood products (i.e. sawlogs, pulpwood, or cordwood) are the property of the landowner unless otherwise specified in the easement agreement. They will not be used for any purpose unless permission is first obtained from the landowner. When the landowner requests salvage of these materials, they will be stockpiled just off the CWA, but not within 50 feet of streams, floodplains, or wetlands. Equipment stacking the wood products will not leave the CWA. Usable timber that measures at least 10 inches in diameter at the

butt will be cut into pole lengths or as specified in the easement agreement.

### 2. Brush

All cleared brush will be disposed of by one of the following methods:

- Brush may be piled just off the CWA but not within 50 feet of streams, floodplains, or wetlands. Equipment stacking the brush will not leave the CWA. Brush piles will be constructed a maximum of 12 feet wide and compacted to approximately 4 feet high, with periodic breaks at a minimum of every 200 feet to permit wildlife travel. The landowner will be consulted to determine acceptable brush pile locations along the CWA.
- Brush may be burned where permitted by law provided necessary burning permits are obtained. Fires will be of reasonable size, not located in environmentally sensitive areas, and patrolled so that they will not spread off the CWA.
- The brush may be chipped. Chips will be given away, buried, or thinly spread (less than 1 ton/acre) over the CWA or piled off the CWA per landowner request except in ***agricultural lands*** or within 50 feet of streams, floodplains, or wetlands. Chipping will be limited to those areas specified in the easement agreement. During ***restoration***, soil will be augmented by the addition of 12 to 15 pounds of nitrogen (at least 50% slow release) per ton of chips to aid revegetation.

### 3. Fence Crossings

Where it is necessary to remove fences, adequate temporary fences or gates, as illustrated in figure 3, will be installed ***immediately***. Such temporary fences or gates will be kept closed, except when necessary for construction purposes. Based on consultation with the landowner, temporary fencing will be installed along and/or across the CWA as necessary to protect livestock from active pipeline construction and open trenches. In addition, alternative pasturing/feeding arrangements may also be made.

Once construction is completed, permanent fence repairs will be completed. All fences that have been cut or removed will be permanently repaired or replaced during restoration to match the original type of the fence as much as possible. Where there is any doubt as to the usability of old fence material, new material will be used in making repairs. Fence posts will be installed to a depth that will prevent frost heave (normally 24- to 36-inches).

## D. GRADING

Grading is necessary to provide a smooth and even surface for safe and efficient operation of construction equipment. Grading will be the minimum amount necessary and includes prompt installation of erosion control devices, such as interceptor diversions, ***sediment filter devices***, and equipment crossings at streams to minimize soil loss and subsequent sedimentation.

### 1. Tree Stump and Rock Removal/Disposal

Tree stumps and large rocks will be cut, graded, or removed as necessary to permit construction and to provide adequate clearance for mechanical

equipment and other vehicles. Tree stumps that are adjacent to roads will be cut close to the ground or removed.

Stumps and large rocks will be disposed of in the following manner, pending landowner approval:

- buried within the CWA except in agricultural, residential, or wetland areas;
- cut flush with the ground using a stump grinder;
- windrowed just off the CWA with landowners' permission. Windrows will be a maximum of 12 feet wide with periodic breaks a minimum of 200 feet apart;
- hauled from the site and disposed of in an approved landfill or other suitable area.

### 2. Topsoil Conservation in Non-agricultural Areas

Topsoil (up to 12 inches) will be stripped from the CWA in residential areas, and where the landowner requests. Figure 4 illustrates topsoil conservation techniques. The topsoil will be stockpiled separately from all subsoil and will be replaced last during ***final grading***. Some erosion control devices are indicated on the CAS. The ***Inspector*** will determine if additional erosion control devices are needed in topsoil storage areas.

In residential areas, topsoil replacement (i.e., importation of topsoil) is an acceptable alternative to topsoil segregation.

### 3. Erosion Control Devices Installed During Grading

Temporary erosion controls will be installed immediately after the initial disturbance of soil. The most effective and versatile erosion control devices are interceptor diversions and sediment filter devices as illustrated in figures 5, 6, and 7. Temporary diversions will be maintained during the construction phase until final diversions are installed. The CAS show the location of temporary interceptor diversions. Where required grading has significantly changed the slope, the Inspector may require more or fewer temporary diversions consistent with the table on figure 5.

All temporary erosion control devices, including roadside ditches, will be inspected near the end of each work day or after each storm event of 1/2 inch or greater, to ensure proper functioning. Any devices damaged beyond functioning will be repaired ***promptly***.

### 4. Temporary Road Entrances

Temporary road entrances as illustrated in figures 8 and 9 will be installed during grading where the CWA crosses public roads when needed to maintain safe conditions and to prevent tracking soil and mud onto public roads. These installations are designed to remove mud from vehicle tires and tracks before accessing the road. In addition, public roads will be swept, shoveled, or scraped as necessary to keep the road surface safe. If the public road is gravel, the temporary entrance is not required to be graveled. Typical erosion control measures at road crossings are illustrated in figure 10.

## E. ACCESS ROADS

Typically, Millennium requires access roads to the construction and staging areas. New access roads will be built only if existing access is inadequate. The access roads will be a maximum 25-foot wide with additional width in tight turns and at intersections with public roads. The roads will either be temporary (used for access during construction only) or permanent (used during and after construction for operation and maintenance of the facilities). All public roads are available for use as access roads without further approvals subject to posted weight restrictions. Safe and accessible conditions will be maintained at all roadway crossings and access points during construction and restoration.

Access road gradient will be as flat as local topography will practically allow. By breaking or changing grade frequently, fewer erosion problems will be encountered than on long, straight, continuous gradients. Interceptor diversions and/or other erosion and sediment control devices will be installed as needed.

At temporary road entrances, geotextile fabric and either rock or Terra Mats as illustrated in figures 8 and 9 or equipment pads will be used. The roadbed will be cleared of small stubs because these tend to puncture the fabric, thereby allowing fine particles to mix with the gravel.

Roads will cross streams and wetlands as close as possible to right angles. Road gradients approaching these crossings will be flattened to decrease runoff velocity. Runoff will be dispersed just prior to the crossing by means of an interceptor diversion with a sediment filter device at the outlet. Where conditions permit, new roads will be located at least 25 feet from any stream or wetland except at crossing locations. Culverts will be sized and placed to permit water flow under the access road.

After construction, temporary access roads (including any additional width used for construction) will be graded and left intact for the landowner's benefit, or removed and the area restored using the same specifications as applied to the CWA.

## F. RESIDENTIAL AREAS

The following mitigation measures will be implemented for all residences within 50 feet of the CWA:

- mature trees and landscaping will not be removed from within the edge of the CWA unless necessary for safe operation of construction equipment;
- immediately after backfilling the trench, all lawn and landscaping restoration will commence, however an access lane may be temporarily retained if authorized by the Inspector;
- while the trench is open, the edge of the CWA adjacent to the residence will be safety fenced for a distance of 100 feet on either side of the residence to ensure that equipment, materials, and spoil remain within the CWA;
- a minimum of 25 feet will be maintained between the residence and CWA for a distance of 100 feet on either side of the residence. If the facility must be within 25 feet of a residence, it will be installed such that the

trench does not remain open overnight and in accordance with the appropriate detail in the CAS.

In those instances where construction has the potential to affect water quantity/quality from domestic or agricultural wells or springs in the proximity of the CWA, Millennium will offer to conduct pre- and post-construction (within two months of construction work restoration) testing of water wells within an appropriate distance (typically 150 feet) of the pipeline. Temporary construction fencing will be installed around any water supply well within the CWA prior to construction activities. These tests may include a pump inspection, flow rate, and bacteriological cultures. If a water well or spring used by the landowner is damaged as a result of Millennium's activities, Millennium will provide a temporary source of water and compensate the owner.

In those instances where the pipeline crosses private access roads, provisions will be made to ensure uninterrupted access along the road. These provisions will include promptly backfilling the trench and/or placing steel plates over the open trench or other similar measures as specified in the easement agreement.

## G. TRAILS

For perpendicular trail crossings identified on the CAS Millennium will ensure safe and uninterrupted passage by:

- posting warning signs in each direction;
- erecting safety fencing;
- permitting hikers to safely cross the trench by leaving trench plugs or using other bridging devices;
- constructing and completing restoration through the area quickly; and
- coordinating with state and/or local park officials.

In addition, the trench will not be opened until the pipe is ready to be installed and the trench will be backfilled the same day. The trench will not be left open overnight within 100 feet of the trail crossing. The trail will be restored immediately after backfilling. These precautions will be taken regardless of the time of year. Figure 11 shows typical mitigation measures for trail crossings.

Site-specific plans for non-perpendicular trail crossings are provided on the CAS.

Millenium will notify the responsible agencies for any trail crossings at least one week in advance to commencing construction activities.

## H. TRENCHING

### 1. Trenching Specifications

Typically, the trench will not remain open for more than 30 days in any area unless authorized by the Inspector (additional restrictions for stream and wetland areas are provided in Section IV).

- As the trench is completed, trenchline breakers as illustrated in figure 12 will be installed promptly as shown on the CAS. Topsoil will not be used to construct the breakers. The breakers reduce water velocity and erosion of the trench bottom. All breakers will be maintained promptly.
- Sediment filter devices will be installed around spoil storage areas before digging bore pits.
- If it is necessary to pump water from the trench or bore pits, the water will be pumped into a non-environmentally sensitive, heavily vegetated upland area, a sediment trap as illustrated in figure 13, or through a sediment filter device as illustrated in figures 6 and 7 at least 10 feet from any stream or wetland in order to minimize erosion and subsequent sedimentation of streams or wetlands. Water impounded in the trench will not be released directly or by overland flow into any ***waterbody*** or wetland.

When the trench must remain open for a greater length of time (i.e. hydrostatic test locations), appropriate erosion controls and safety measures will be employed as directed by the Inspector.

### 2. Blasting

All drilling and blasting will be done in a cautious manner, and suitable precautions will be taken to avoid injury or damage to persons, livestock, or other property. Landowners will be given timely notice (1 weeks' prior notice with at least 1 day confirming notice) prior to blasting.

If blasting is necessary within 150 feet of residential or commercial buildings/structures or other utilities, Millennium will hire an independent contractor to perform pre- and post-blast structural inspections and, if necessary, seismographic monitoring. Millennium will also contact all utility owners and request that an inspector from the company be present during construction across the utility line.

### 3. Temporary Construction Access Over the Trenchline

Where access across the trenchline is required, temporary facilities such as trench plugs or steel plates will be constructed or installed to permit safe crossing of livestock, vehicles, equipment, and persons from one side of the trench to the other. The access point will have #9 wire fence installed along both sides to prevent entry into the trench.

## I. BACKFILLING SPECIFICATIONS

Backfilling will follow pipe lowering as closely as practical. Suitable material, but not topsoil, will be used to pad the pipe. Soil that has been excavated during construction and not used for backfill will be evenly spread over the cleared CWA or removed from the site and properly disposed. All waste materials such as barrels, cans, drums, stumps, coating and wrap, rubbish, waste, or other refuse will not be placed in the trench or left on the CWA.

Trenchline barriers as illustrated in figure 12 will be placed in the trench prior to backfilling as shown on the CAS to prevent water movement and subsequent erosion.

Excess rock, including blast rock, may be used to backfill the trench to the top of the existing bedrock profile once the pipe is properly padded.

## J. FINAL GRADING, RESTORATION AND STABILIZATION

After construction activities, all disturbed areas will be stabilized with either (1) final grading and restoration; or (2) ***temporary stabilization measures*** in order to prevent erosion and sedimentation until final grading and restoration can be completed.

### 1. Final Grading

Final grading will be completed within 10 calendar days of backfilling, weather and soil conditions permitting. When conditions require a delay, the 10-day time frame will not start until conditions are suitable for grading. Should unsuitable soil conditions persist, or be expected to persist, for more than 14 calendar days, the Inspector will record the conditions and require the installation of temporary stabilization measures, and final grading and restoration will be delayed. In no case will final grading be delayed beyond the end of the next recommended seeding season.

If final grade can be established, but conditions are not ideal for permanent seeding, the Inspector will specify application of temporary stabilization measures (including temporary seeding), and may also consider concurrent application of final seed mix and mulch as provided in table 2a or per the local soil conservation authority.

During final grading and with landowner permission (except in agricultural land), soil over the trench will be mounded to allow for future settling. If the landowner does not agree to this process, backfill will be “walked-in” with tracked construction equipment to minimize future subsidence. Where fill in the trench or major depressions have settled below ground level, additional fill will be added as needed, and the area brought to final grade. The Inspector may approve a temporary travel lane in the CWA where needed to facilitate the remainder of construction and/or restoration. This travel lane will be restored when access through the area is no longer required.

During final grading the slope may be altered from the original grade if the resulting grade will be more stable or provide other benefits to the environment, Millennium, and/or the landowner. Such variances will be processed in accordance with Section VII.H.

Conserved topsoil will be returned during final grading.

Final erosion control devices will be installed during final grading. Sediment filter devices needed to protect off-CWA resources will be installed or rebuilt promptly after final grading. Final interceptor diversions will not be installed in agricultural or pasture land without landowner’s consent.

Appropriate soil compaction mitigation (disking) will be performed in severely compacted residential areas.

## 2. Restoration

Restoration will begin within 6 days of final grading, weather and soil conditions permitting. Fertilizer and lime will be disked into the soil (except rocky soils) to a depth of 3 to 4 inches to prepare a seedbed. In rocky soils, fertilizer and lime may be incorporated into the soil with tracked equipment. Seeding and mulching the CWA will promptly follow seedbed preparation. If a mulch blower is used, the strands of the mulching material will be long enough to allow for anchoring. Mulch will be anchored promptly after installation with a crimping disk or tracked equipment. Mulch tacifiers used in accordance with the manufacturer recommendations may be used as an alternative.

Hydroseeding will not be used without the specific written authorization of Millennium's Environmental Project Director.

The typical application rates for lime, fertilizer, seed, and mulch are listed in table 2a. They will be used unless the easement agreement, permit, or local Natural Resource Conservation Service (***NRCS***) provides project-specific recommendations.

The seed will be uniformly applied and covered in accordance with the written recommendations of the local soil conservation authorities or land management agencies.

In the absence of recommendations from the local conservation authority, a seed drill equipped with a cultipacker is preferred for application, but broadcast can be used at double the recommended seeding rates. Where seed is broadcast, the seedbed will be firmed with a cultipacker or roller after seeding.

Permanent seeding, liming, and fertilizing may be performed by the landowner as specified in the easement agreement. The Inspector (or operating personnel) will ensure that the restoration is satisfactory and consistent with the landowner's planned land use.

The turf, ornamental shrubs, and specialized landscaping will be restored as specified in the easement agreement. Personnel familiar with local horticultural and turf establishment practices will perform Restoration work.

***Steep slopes*** will be restored immediately after final grading, weather permitting.

Jute netting as illustrated in figure 14 or equivalent approved by the Inspector may be used on steep slopes to help stabilize the CWA.

## 3. Temporary Stabilization Measures

When the Inspector determines that temporary stabilization measures are required, they will be completed as soon as possible. The seeding and mulching application rates are provided in table 2b. Consideration will be given to the following when determining if temporary stabilization measures are to be implemented:

- anticipated weather conditions; and
- resources on and off the CWA to be protected.

If temporary stabilization measures are utilized, final grading and/or restoration will commence once weather and soil conditions permit.

Mulch will be applied in accordance with the specifications outlined in this section except when mulching before seeding. The mulch application on all 8 percent or greater slopes within 100 feet of waterbodies and wetlands will be at a rate of 3 tons/acre.

### 4. Restoring Man-Made Structures

All existing man-made installations that are disturbed or damaged during construction will be repaired or replaced and left in equivalent or better condition than they were found prior to construction, unless otherwise specified in the easement agreement. All public roads will be restored immediately after backfilling.

Existing diversion terraces or ditches will be repaired or replaced in accordance with the original design specification if available. In particular, attention will be paid to ensure that highly impermeable subsoil material is used as trench backfill to restore the diversion. This material will be recompacted below surface.

### 5. Off-Road Vehicle (ORV) Control

The need for ***ORV*** control will be discussed with each landowner and park manager along new ROW (not adjacent to existing ROW) in forest lands. If requested, one or more of the following ORV control measures will be installed during restoration:

- Plant conifers (pine trees) across the CWA. The spacing of trees and length of CWA planted should provide for adequate facility maintenance, but should be sufficient to limit access and to screen the ROW from view. Trees will not be planted directly over the pipeline.
- Install a slash and timber barrier, a pipe barrier, or a line of boulders across the CWA to restrict vehicle access.
- Install a locking gate with fencing extending a reasonable distance to prevent bypass.
- Install “No Trespass” signs.
- Limit ROW maintenance to that shown in figure 28 for 100-foot back from the road.

## K. NOISE IMPACT MITIGATION

Construction equipment will be properly muffled and maintained to avoid producing excessive noise near ***noise sensitive areas***.

## L. HYDROSTATIC TESTING

Millennium will verify the facility’s integrity by hydrostatic testing. Water will be drawn from local sources (streams, ponds, public water supplies) as indicated on the CAS in a manner that will minimize impacts to the

environment and other existing users, while maintaining adequate stream flow and such that no perceptible change in water level or flow rate occurs. Test headers will not be located within 50 feet of streams or wetlands with standing water or saturated conditions unless topographic conditions dictate otherwise. If test headers must be installed within 50 feet of streams and wetlands, additional sediment filter devices will be installed to prevent sediments from entering into the stream or wetland. Water from state designated high quality streams or streams utilized as public water supplies will not be used unless other water sources are not readily available and the jurisdictional state or local agency permits its use. Intake hoses will be screened.

Jurisdictional agencies will be notified of the intent to withdraw water from streams at least 48 hours before testing activities, unless they waive this requirement in writing.

All welds will be radiographically inspected before pipe installation under waterbodies or wetlands.

Millennium will attempt to discharge hydrostatic test water in the same watershed from which it was taken. Should the hydrostatic testing plan require otherwise, Millennium will develop an appropriate plan to disinfect the water, if necessary, prior to its release into the environment.

The discharge of the hydrostatic test water will be performed in a manner that minimizes erosion. The energy of the released test water will be dissipated by discharging the water:

- into a well-vegetated upland, non-agricultural area;
- into a transport trailer tank;
- into a tank(s) or holding pond if public water supplies are used;
- into a body of water (with all required permits); or
- through sediment filter devices or a sediment trap to filter out various particulate matter.

If necessary, the water discharge rate will be regulated using energy dissipation device(s), and/or sediment barriers to prevent erosion, streambed scour, suspension of sediments, or excessive streamflow. During the discharge, the Inspector will ensure that erosion and sedimentation are properly controlled.

Methanol may be injected, after discharging the water, to dry the pipe. Excess methanol will be collected from the facility and disposed of in accordance with applicable state and local regulations.

## III. AGRICULTURAL CONSTRUCTION

### A. GENERAL

Construction through agricultural lands will normally occur on a 100- to 125-foot wide CWA to protect topsoil from the impacts of trenching, traffic, and construction activity. Millennium will utilize a minimum 100-foot wide CWA to accommodate topsoil segregation and will bury the pipeline with a minimum 4-foot of cover in agricultural areas that are not shallow to bedrock and allow

for an additional 1-foot of cover under drainage tile (figure 15). In agricultural lands that are shallow to bedrock, the pipeline with be installed with sufficient cover to place it entirely within the bedrock.

General procedures to be used for clearing and disposal of wood products and brush are identified in Section II.C. However, any cherry (*Prunus* spp.) trees and shrubs cut within pastures, including wood and foliage, will be disposed of immediately into non-pasture locations to avoid contact with livestock.

To the greatest extent practical, Millennium will conduct all topsoil conservation and restoration activities in agricultural lands between the last week in May and the first week in October. The ***Agricultural Inspector***, in consultation with the Chief Inspector, Millennium's Environmental Project Director and the New York Department of Agriculture & Markets, will be responsible for determining if soil and weather conditions are suitable for topsoil removal/restoration activities outside these timeframes. The Agricultural Inspector is also responsible for informing the Chief Inspector when conditions (such as wet weather) make it necessary to restrict construction activities in agricultural lands regardless of the time of year.

Excess rock will be removed from at least the top 20-inches of soil to the extent practicable in all rotated and permanent agricultural lands, pastures, residential areas, and other areas as specified in the easement agreement. The size, density, and distribution of rock within the CWA should be similar to adjacent areas not disturbed by construction.

Organic soils such as the "black dirt" region in Warwick, NY require site-specific agricultural construction and mitigation procedures. These procedures will be shown on the CAS.

Access to hydrostatic test locations within agricultural lands will be via access roads other than the construction ROW, if available. If suitable alternative access is not available, restoration will not be completed for that entire field until hydrostatic tests are complete.

After construction, temporary access roads (including any additional width used for construction) through agricultural land will be removed and the area restored using the same specifications as applied to the CWA for topsoil conservation, subsoil decompaction and rock removal, etc., unless the access is to be regraded and left intact for the landowner's specific benefit.

## B. TOPSOIL CONSERVATION

Topsoil (up to 16 inches) will be stripped from the CWA in annually cultivated or rotated agricultural lands and in idle or fallow fields, and where the landowner requests. Figure 15 illustrates topsoil conservation techniques. The topsoil will be stockpiled separately from all subsoil, and will be replaced last during final grading. Topsoil will not be used to pad the pipeline, fill sacks for trenchline barriers or for any other purpose. Some erosion control devices for topsoil are indicated on the CAS. The Inspector will determine if additional erosion control devices based on field conditions are needed in topsoil storage areas.

## C. SUBSOIL CONSERVATION

In agricultural lands where bedrock is less than 20-inches deep, at least 2/3 of the subsoil will be stripped from the CWA and stockpiled separately from the conserved topsoil and trench spoil. As an alternative, imported subsoil approved by the Agricultural Inspector can be used. The subsoil will be replaced over the bedrock as part of final grading. Imported subsoil, as needed, will be used as cover over rock backfill to deter its uplift by frost action.

## D. BACKFILLING

The trench will be de-watered prior to backfilling. The specifications provided in Section II.H will be followed.

During backfilling, the subsoil will be crowned over the trench to allow for subsequent settling. This subsoil will be “walked in” or otherwise allowed to settle prior to topsoil replacement.

Excess rock, including blast rock, may be used to backfill the trench provided it is deeply buried (greater than 30-inches in mesic soils or 36-inches in frigid soils below the final grade) and the pipe is properly padded.

## E. SOIL DECOMPACTION

Millennium will decompact subsoil twice to ensure proper aeration, drainage, and root penetration. Millennium will limit equipment travel in decompacted areas to the extent practical and will require additional decompaction for areas where construction access is still required. Once topsoil replacement has begun, all travel will be restricted to farmland restoration equipment. Prior to topsoil replacement, Millennium will rip and/or chisel the subsoil with a deep ripper or heavy duty subsoiler to at least 16-inches in depth, adjusted to meet site-specific conditions, and attempt to separate and remove rocks 4 inches or larger in size lifted to the subsoil surface, except where subsoil is naturally excessively stony. These rocks will be deeply buried (greater than 30-inches in mesic soils or 36-inches in frigid soils below the final grade) within the trench or collected and disposed of elsewhere in an appropriate upland location in consultation with the landowner or off-site. After topsoil replacement is complete, Millennium will shatter the subsoil again with a paraplow, remove any additional rocks uplifted during the decompaction process, and limit traffic on the CWA to prevent recompaction.

Soil compaction tests for both subsoil and topsoil within the CWA will be conducted and recorded in agricultural areas during final grading. Tests of subsoil must be performed before topsoil is restored to ensure complete depth of subsoil ripping throughout the CWA.

Hand-held US Army Corps of Engineers-style (***COE***) cone penetrometers or other similar devices (e.g. soil compaction tester) will be used to test for compaction. Tests will be performed at least once during subsoil decompaction and once after topsoil replacement on each agricultural property, though the Agricultural Inspector may conduct more testing as needed.

## F. RESTORATION

Attempts will be made to coordinate restoration activities with the landowner's planting schedule where practicable. Should the Agricultural Inspector determine that soil conditions unsuitable for final restoration exist, he will record the conditions and require the installation of temporary stabilization measures (including temporary seeding), and final grading and restoration will be delayed. Among the methods used by the Agricultural Inspector is the Atterberg test for soil plasticity. In no case will final restoration be delayed beyond the end of the next growing season.

Permanent interceptor diversions will not be installed in agricultural lands unless otherwise specified in the easement agreements.

Active pasturelands will not be mulched unless grazing deferment plans have been developed with willing landowners, grazing permittees, and land management agencies, as appropriate, to minimize grazing disturbance of revegetation efforts.

## G. DRAINAGE TILE AND IRRIGATION FACILITIES

Millennium has contacted landowners and/or the local NRCS to locate drainage tile facilities and irrigation systems. These facilities are located on the CAS. When advised by the landowner or NRCS that a landowner contemplates (within 3 years) the installation of drainage tile in areas crossed by the pipeline, the pipeline will be installed at a sufficient depth to accommodate the drainage tile and within US Department of Transportation (DOT) specifications.

All drainage tile crossed by construction activities will be marked and probed with a sewer rod or pipe snake to determine if damage has occurred. Drainage tile removed, cut, broken, or otherwise damaged during construction will be repaired or replaced as illustrated in figures 16 and 17. Qualified personnel will be used for all testing and repairs. Temporary measures approved by the Inspector will be taken to provide suitable drainage until permanent repairs are made.

Water flow will be maintained in crop irrigation systems unless shutoff is coordinated with the affected parties.

## H. MONITORING

All agricultural portions of the CWA will be monitored for crop productivity, inordinate soil settling, excessive soil compaction, excessive rocks, and excessive wetness for 2 years following completion of restoration activities. Persons knowledgeable in these issues will undertake the monitoring. Final soil compaction tests of the soil profile's topsoil and subsoil horizons will be done under appropriate soil moisture conditions (moderately moist for most soils). Comparative tests will be done on soils of similar characteristics from undisturbed areas adjacent to the CWA. Compaction measurements of disturbed areas should be equal or less than that of adjacent undisturbed areas. Any portion of the CWA that is compacted greater than the adjacent agricultural lands will be decompacted again and re-tested. Should any of these conditions occur as a result of Millennium's construction and/or restoration activities, appropriate mitigative actions (i.e. importing additional

topsoil, performing additional decompaction, additional rock removal, and/or installing additional drain tile) will be undertaken by Millennium.

## IV. STREAM AND WETLAND CROSSINGS

### A. STREAM CROSSINGS

#### 1. General

The main objective of any waterbody crossing is to construct the pipeline in a manner that minimizes erosion and subsequent sedimentation into the waterbody. Crossings will be constructed as close as possible to right angles with the waterbody channel. Adequate downstream flow rates will be maintained at all times to protect aquatic life and prevent the interruption of existing downstream uses. Each waterbody crossing will be treated as a separate construction entity, such that trenching, pipe installation, backfilling, and temporary stabilization measures or restoration are completed in the minimum number of consecutive calendar days possible. Millennium intends to have a mini-crew(s) available that can work independent from the main spread in order to complete stream crossings with high water use classifications (C(t) or higher) during conditions that are optimal for construction and minimization of impacts to the water body (low water flow and favorable weather forecast). Use of these mini-crews will be at Millennium's discretion. Whenever a time limit is imposed on a crossing procedure, that time limit is only applicable to trenching (except blasting), lowering in, and backfilling. Clearing, grading and equipment crossing installation and removal activities are not included as part of the “separate construction entity”. Construction equipment will not be allowed in the water except as provided in this Section.

Unless expressly permitted or further restricted in the CAS, crossings must be constructed during the following time windows:

- Coldwater Fisheries - June 1 through September 15
- Coolwater and Warmwater Fisheries - June 1 through November 30

Millennium will notify authorities responsible for potable water supplies at least 1 week, or as required by state or local regulation, prior to any waterbody crossing.

When water levels are temporarily high, the Inspector will direct that starting any waterbody crossing be postponed until water levels subside.

The CWA will be as specified in the CAS. Pipe assembly for the waterbody crossing will usually be performed in the CWA prior to or concurrently with trenching.

Standards relating to spill prevention at waterbodies are contained in Section V., “Spill Prevention, Containment and Control”.

If the facility parallels a waterbody, an attempt will be made to maintain at least 15 feet of undisturbed vegetation between the waterbody and the right-of-way except at the crossing location. Where waterbodies are adjacent to

the CWA, sediment barriers will be installed along the edge of the CWA as necessary to contain spoil and sediment.

### 2. Crossing Techniques

Millennium will typically utilize either the dry-ditch (flume pipe or dam and pump) or wet-ditch techniques to install pipelines across waterbodies. Figures 18, 19 and 20 illustrate these methods. The site-specific methods to be used are shown on the CAS. Upland construction techniques may be used for ***intermittent waterbody*** crossings without perceptible flow at the time of the crossing, provided that a culvert is installed to carry stormwater flow across the trench area and the erosion and sediment control devices illustrated in figure 21 are installed.

### 3. Clearing

Tree and brush clearing will be performed as previously described in Section II, "Upland Construction". All cleared materials will be disposed of at least 50 feet from the water's edge.

### 4. Grading

Grading equipment will not enter the water to grade the banks. Waterbody banks will be graded only where, and as much as, necessary to permit safe and efficient operation of construction equipment. Initial grading within 25 feet of the water's edge will be limited to only the area needed to install the equipment bridge and any temporary work space. Any additional grading to the water's edge will be timed such that it immediately precedes trenching and pipe installation activities. During grading operations, sediment filter devices will be installed promptly as close to the water as practical. All disturbed areas within 50 feet of the water's edge will be promptly mulched. The mulch will be maintained until the waterbody crossing restoration is complete. Spoil from grading will be piled at least 10 feet from the waters edge and immediately protected with sediment filter devices so that it will not erode into the waterbody.

Construction equipment bridges consisting of culvert(s) with clean rock backfill or equipment pads as illustrated in figures 22 and 23 will be installed during grading operations at all waterbodies. For proper culvert installation, the Inspector may permit grading equipment to enter the water. Equipment bridges will not be required at ***minor waterbodies*** that do not have a state-designed fishery classification (for example, agricultural, or intermittent drainage ditches). However, if an equipment bridge is used, it will be constructed in accordance with the ECS.

### 5. Trenching

Notifications to jurisdictional agencies will be made at least 2 days prior to any trenching in waterbodies.

Prior to trenching within the waterbody, water impounded in the upland trench will be pumped into a sediment filter device, sediment trap, or heavily vegetated area.

Sediment filter devices for trench spoil will be installed prior to commencing trenching activities. Sediment filter devices will be temporarily removed from the trench line to allow trenching activities to proceed.

Trench spoil from the waterbody will be piled at least 10 feet from the water's edge (topography permitting) and protected by sediment filter devices. All spoil will be placed in the CWA at least 10 feet from the water's edge.

The minimum depth of cover for all waterbody crossings will be 4 feet in normal soils and 2 feet in consolidated rock.

Trench plugs will be used at all non-flumed waterbody crossings to prevent diversion of water into upland portions of the pipeline trench and to keep any accumulated trench water out of the waterbody. Trench plugs will be of sufficient size to withstand upslope water pressure.

## 6. Blasting

During the pre-planning of waterbody crossings, an evaluation (usually with a backhoe) will be made concerning the need for blasting. If the evaluation is inconclusive, the waterbody bed will be tested for consolidated rock prior to trenching.

Blasting will not be done within waterbody channels without prior approval from government authorities having jurisdiction and at least 2 days prior notice to the authority must be provided.

If the waterbody bottom is consolidated rock, it can be drilled and shot at any time prior to commencing the crossing. However, removal of shot rock, and any additional drilling, shooting, and material removal, will be completed within the minimum number of consecutive calendar days practical. The time frame for completing the crossing will immediately commence once a trench of appropriate dimensions is established.

## 7. Backfilling

Waterbody bottoms will be returned as near as practical to their original contours. Spoil from the trench will be used as backfill. Clean gravel or native cobbles will be used for the final 1-foot of fill in the backfilled trench in all coldwater fisheries.

The sediment filter devices at the water line will be promptly reinstalled after backfilling.

## 8. Restoration

The preferred method is to achieve final grade and restore the waterbody, its banks, and 50-foot buffers within 24 hours of backfilling. In the absence of site-specific seeding recommendations, the specifications listed in table 2a will be used. If conditions do not permit the preferred method, the CWA not in use for access will be promptly rough graded and stabilized in accordance with table 2b.

Waterbody banks will be stabilized and temporary sediment barriers installed within 24 hours of completing the crossing. For dry-ditch crossings, bank stabilization will be completed before returning flow to the waterbody channel.

Asphaltic emulsions will not be used to stabilize mulch within 100 feet of waterbodies. Liquid mulch binders will not be used within 100 feet of waterbodies.

All equipment bridges will be removed once access in the area is no longer required.

Replacement of waterbody banks will be at the approximate original contour. If the waterbody banks are such that an unstable final soil grade could result and vegetative stabilization would be inadequate, the Inspector will require mechanical stabilization of the waterbody banks. Mechanical stabilization includes riprap, gabions, jute netting, etc.

Disturbed riparian areas will be revegetated with conservation grasses and legumes or native plant species, preferably woody species.

Riprap will be of field or quarry run stone, which is hard and durable. The riprap will be large enough to prevent normal waterbody current from moving it, typically 6-inch rock for slow moving waterbodies and 12-inch or larger rock for others. The riprap will be placed at least 18-inches thick and generally thicker at the base. The riprap slope will be no steeper than 50% and should conform to the remainder of the waterbody bank slopes where they are flatter than 50%. Proper installation may require extending the riprap beyond the CWA. These installations will be coordinated with the ***Environmental Inspector*** and Millennium's Environmental Project Director.

Erosion control fabric, such as jute thatching or bonded fiber blankets will be installed at a minimum, on waterbody banks at the time of final bank recontouring. Erosion control fabric will be anchored with wooden stakes.

Sediment filter devices will be removed once permanent revegetation is successful.

## B. WETLAND CROSSINGS

### 1. General

The main objective of any wetland crossing is to minimize construction-related disturbance and restore the original contour of the wetland. Wetlands will be marked in the field with the provided signage by a knowledgeable person prior to the start of construction. The Inspector will maintain these field markings during construction.

Aboveground facilities will not be located in any wetland, except where the location of such facilities outside of wetlands would prohibit compliance with US Department of Transportation regulations.

When water levels are temporarily high, the Inspector will direct that construction in the wetland will be postponed until after the water levels subside.

Water impounded by beaver dams will be siphoned off as opposed to breaching the dam. Siphons will typically consist of 4-inch flexible, plastic pipe. Water will be discharged in a manner that will not increase sedimentation or scour into adjacent wetlands or waterbodies.

Staging areas for wetland crossings will be located as indicated on the CAS.

The only access roads, other than the CWA, that will be used in wetlands are those existing roads that can be used with no modification and no impact on the wetland. Additional clearing in wetlands along access roads will not be permitted. Within the wetland area, silt fence will be installed along both sides of the road and mats will be placed in the road prior to any further use.

Construction equipment operating in wetland areas will be limited to that needed to clear the CWA, dig the trench, fabricate and install the pipeline, backfill the trench, and restore the CWA. All other construction equipment will use access roads located in upland areas to the maximum extent practicable. Where access roads in upland areas do not provide reasonable access, all other construction equipment will be limited to one pass through the wetland using the CWA.

A typical wetland crossing is illustrated in figure 24.

Mulch will not be used as a temporary erosion control measure in wetlands.

Standards relating to spill prevention at wetlands are contained in Section V, “Spill Prevention, Containment and Control”.

## 2. Crossing Techniques

For wetland crossings without standing water or saturated soils, upland construction techniques will be used provided the top 12 inches of soil is conserved from graded areas, the trench and areas designated for temporary storage of non-wetland spoil. As an alternative, sub-soils can be placed on 6 inches of mulch and retrieved during subsequent backfilling operations. The duration of construction related disturbance will be minimized to the extent practical.

Wetland crossings with standing water or saturated soils will be constructed as separate construction entities, such that trenching, pipe installation, backfilling, and restoration are completed in the minimum number of consecutive calendar days necessary. Clearing, grading, and equipment crossing installations are not included as part of the separate construction entity. The “push-pull” or “float” technique of pipe installation will be utilized whenever water and other site conditions permit.

## 3. Clearing

Tree and brush clearing will be performed as previously described in Section II, “Upland Construction”, except that vegetation will be cut off at ground level leaving the existing root systems in place. All cut vegetation will be removed from the wetland for disposal.

## 4. Grading

Grading in wetlands will consist of the minimum necessary for safe and efficient equipment operation. No grading or removal of stumps or root systems from the rest of the CWA in wetlands will occur unless the Chief Inspector and Environmental Inspector determine that safety-related construction constraints require removal of tree stumps from under the working side of the CWA. The Inspector will note areas where stumps are removed so they can be replanted with woody vegetation as described in "Wetland Restoration".

Equipment pads, board roads, corduroy (no more than 2 layers), and/or construction equipment with wide tracks will be used in wetlands with standing water or saturated soils. Tree stumps, rock, soil imported from outside the wetland or brush will not be used to stabilize the CWA or as equipment pads in wetlands. All equipment pads, board roads, and corduroy will be removed during restoration of the wetland.

Where wetlands are adjacent to the CWA, sediment barriers will be installed along the edge of the CWA as necessary to prevent sediment flow into the wetland. Sediment barriers will be removed only after successful CWA restoration.

Sediment filter devices will be installed promptly across the CWA during grading at any wetland edge and maintained until CWA revegetation is complete. Temporary interceptor diversions will be installed adjacent to wetlands. Relative locations of these devices are illustrated in figure 24.

## 5. Trenching

Sediment filter devices can be temporarily removed from the trenchline to allow trenching activities to proceed. Spoil piles will be protected with sediment filter devices as shown on the CAS or if determined necessary by the Inspector to prevent the flow of spoil off the CWA.

## 6. Blasting

During the pre-planning of crossing wetlands with standing water or saturated soils, an evaluation will be made concerning the need for blasting. If the evaluation is inconclusive, the wetland will be tested for consolidated rock prior to trenching. If the wetland has consolidated rock, it will be drilled and shot as part of the single construction entity. Topsoil will be removed from the trench area prior to blasting in wetlands without saturated soils.

Blasting mats will be used in wetland areas (except those with standing water) during blasting operations.

## 7. Backfilling

If trench dewatering is required, the water will be discharged through a sediment trap, or into a heavily vegetated area outside the wetland, so that no silt-laden water enters directly into the wetland. Spoil from the trench will be used as backfill. The surface will be recontoured as closely as practical to the original so that drainage patterns will not be changed. In wetlands without

standing water or saturated soils, the conserved soil layer will be returned to the surface during backfilling.

Sediment filter devices will be promptly installed after backfilling.

Where the pipeline trench may drain a wetland, trenchline barriers will be constructed to seal the trench bottom as necessary to maintain the original wetland hydrology.

Concrete coating activities will not take place within 100 feet of any wetland.

### 8. Restoration

Upon completion of construction in wetland areas with standing water or saturated soils, all access improvements will be promptly removed. In the absence of specific recommendations from conservation authorities, the seed mix and rate specified in table 2c will be used. Fertilizer or lime will not be used, unless required in writing by a jurisdictional agency.

Asphaltic emulsions will not be used to stabilize mulch within 100 feet of wetlands. Liquid mulch binders will not be used within 100 feet of wetlands.

Where stumps have been removed, woody vegetation adapted to wetlands will be replanted, except within 5 feet of the pipeline centerline or appurtenances (figure 25).

For all forested wetlands affected Millennium will:

- plant native trees to ultimately restore the CWA except for the maintained portion of the permanent ROW to its preconstruction state;
- plant native shrub and herbaceous species to revegetate the 30-foot wide portion of the permanent ROW selectively maintained as described in Section VI.C.; and,
- consult with the US Fish and Wildlife Service (***FWS***), the Environmental Protection Agency (***EPA***), the COE, and the appropriate state agency to determine the density for planting the native trees and shrubs.

## V. SPILL PREVENTION, CONTAINMENT AND CONTROL

### A. GENERAL

All efforts will be made to prevent spills of any amount of petroleum products or polluting materials. The following will be followed to help avoid spills and minimize the impact of spills that accidentally occur:

- Bulk quantities up to 5,000 gallons of diesel fuel and 5,000 gallons of gasoline will be stored in up to 3 locations (the fuel depots) for each spread. Adequate spill containment measures, such as containment dikes with a capacity for at least 100% of the maximum storage volume combined with impervious lining will be installed before fuel storage tanks are filled, and will be maintained throughout the Project. Bulk quantities of hazardous liquids (e.g., solvents and lubricants) will be stored at the fuel

depot locations. The Chief Inspector will have available a Material Safety Data Sheet (***MSDS***) sheet for each hazardous material on site.

- Generally, fuel will be stored at the equipment staging areas and as much equipment as practical will be refueled there. Any equipment that must be refueled in the field will be fueled from tanks carried to the work site. Fuel carriers (greater than 110 gallons capacity) will not be permitted to cross wetlands or ford waterbodies. Equipment refueling will not be performed within 100 feet of any waterbody or wetland, except by hand-carried cans (5 gallon maximum capacity), when necessary. If construction equipment must be refueled within 100 feet of a waterbody, the procedures outlined in the site-specific drawing for that waterbody will be followed. Care will be taken during refueling not to overfill or spill fuel onto the housing of equipment.
- Refueling areas will be located hydraulically down gradient and outside aquifer protection areas, whenever possible, and if located within an aquifer protection area, the refueling area will be lined.
- Lesser quantities of fuel (up to 500 gallons) and solvents and lubricants (e.g., motor oils, hydraulic fluid) may be stored along the CWA as necessary to service equipment used on the Project (quantities vary depending on the size of the construction spread being used), provided that this storage does not conflict with other parts of this plan. Sorbent booms and clean-up kits will be kept at all storage locations.
- All fuel storage areas will be located at least 100 feet from streams, ponds, or wetlands; at least 200 feet from active private water wells, and at least 400 feet from municipal water wells, unless using an operational fuel storage area established on Millennium property. Equipment servicing, lubricating, and refueling will also be in accordance with these requirements whenever possible. Where these conditions can not be met, the Environmental Inspector will prepare a supplemental Spill Prevention, Control, and Countermeasure (***SPCC***) plan, based on field conditions, to protect these resources.
- Use of hazardous materials for vehicle maintenance will follow the same requirements mentioned above for equipment refueling. Impervious or sorbent materials will be placed under the work area before the work begins. Additional sorbent materials will also be readily available. Waste materials created during maintenance (e.g., used oil) will be collected for proper disposal. An Inspector will inspect the work site and the vehicle after the maintenance work is complete to ensure that all hazardous materials are properly contained. All waste material, including partially used or empty containers, discarded parts, clean up rags, and used sorbent materials, as well as discarded hazardous materials containers (e.g., oil cans, grease tubes), will be collected and placed in open-top drums for proper disposal.
- All motor fuel, lube oil, chemicals, and other polluting substances will be tightly sealed and clearly labeled during transportation and storage.
- Fuel trucks, pumps, mechanics' vehicles, the contractor's foremen's vehicles, Inspectors' vehicles, and all vehicles working within aquifer protection areas and public water supply watersheds will be equipped with spill kits containing absorbent materials approved for petroleum products.
- Construction equipment will not be washed in any waterbody or wetland, nor will runoff resulting from washing operations be permitted to directly enter any waterbody or wetland area.
- Construction equipment, vehicles, materials, hazardous materials, chemicals, fuels, lubricating oils, and petroleum products will not be

parked, stored, or serviced within 100 feet of all waterbodies and wetlands.
- All equipment will be inspected daily for leaks prior to beginning work. Steps will be taken to repair leaks or remove the equipment from service, if necessary.

### B. Spill Cleanup

Spills occurring during construction, operation, and maintenance will be reported immediately to the Inspectors, Columbia's Monitoring Center at 1-800-835-7191, and Millennium's Environmental Project Director at 607-763-0116. Columbia will then contact the appropriate federal, state and local agencies, if the spills are of a reportable quantity.

If a spill should occur, Millennium will take immediate action to ensure that the impact of the spill is minimized, and to see that appropriate cleanup action is immediately undertaken. Table 3 contains state and local spill emergency contacts.

In the event of a spill into or in the vicinity of bodies of water or wetlands, the following will occur immediately:

- the source will be immediately stopped;
- the spill will be contained by placing sorbent booms or constructing dikes;
- the spill will be collected with sorbent materials, skimmed off water surfaces with booms, and/or the contaminated soil will be excavated; and
- the waste materials will be properly disposed in accordance with Millennium policy.

The affected areas will be restored as closely as possible to their previous condition.

If the spill is such that Millennium or the on-site contractor cannot immediately and effectively respond, Millennium's contractor who specializes in spill cleanup will be employed.

## VI. MAINTENANCE

### A. GENERAL

Maintenance of Millennium's ROWs will be an ongoing process that will be governed by Millennium policy, certificate, permit conditions, and easement agreements. Full width vegetation maintenance clearing will not be done more frequently than every 3 years. However, to facilitate periodic corrosion and leak surveys, a corridor not exceeding 10 feet in width centered on the pipeline may be maintained annually in an herbaceous state. In no case will full width vegetation maintenance clearing occur between April 15 and August 1 of any year.

Maintenance activities will be performed with emphasis on preservation and enhancement of the environment. All applicable certificate and permit conditions will be incorporated into the future maintenance plan for the facility.

Specific procedures will be developed in coordination with the appropriate agency to prevent the introduction or spread of noxious weeds and soil pests resulting from construction and restoration activities.

## B. UPLAND AREAS

Agricultural lands will be monitored as discussed in Section III., Agricultural Construction.

The ROW will be maintained by mowing or other mechanical means. Herbicides will not be used.

Plant growth on the ROW and in the erosion control devices will be inspected regularly and maintained for the life of the facility. Follow-up inspections will occur after the first and second growing seasons. Revegetation will be considered successful if perennial non-nuisance vegetation is similar in density to adjacent undisturbed land. If revegetation is not successful, the area will be restored as soon as practical. If vegetative cover and density are not similar or there are excessive noxious weeds after 2 full growing seasons, a professional agronomist will determine the need for additional restoration measures (such as fertilizing or reseeding). The agronomist's recommendations will be implemented as soon as possible.

Problems with drainage and irrigation systems resulting from construction activities will be reported to the local operations supervisor. Corrective measures will be performed as needed.

Erosion, landslide, subsidence and/or sinkhole problems on the facility ROW and access roads will be reported to the local operations supervisor. Corrective measures will be performed as needed provided the problem resulted from construction or operation of the facility. Erosion control devices that are no longer required may be removed at the discretion of the local operations supervisor. Similarly, additional erosion control devices will be installed as required.

All temporary sediment barriers will be maintained in place until permanent revegetation measures are successful or the upland areas adjacent to wetlands, waterbodies, or roads are stabilized. Temporary sediment barriers will be removed from an area once that area is successfully restored.

Efforts to control unauthorized ORV use, in cooperation with the landowner, will continue throughout the life of the project. Signs, gates, and vehicle trails will be maintained as necessary.

## C. WATERBODIES, WETLANDS, AND ENVIRONMENTALLY SENSITIVE AREAS.

Millennium will work cooperatively with appropriate government agencies in an effort to minimize the impacts of ROW maintenance in waterbodies, wetlands, and other environmentally sensitive areas.

Vegetation maintenance will be limited adjacent to waterbodies to allow the growth of a riparian strip at least 35 feet wide, as measured from the waterbody's mean high water mark. Figures 26 and 27 illustrate ROW

maintenance standards near waterbodies. Figure 28 illustrates ROW maintenance standards near other environmentally sensitive areas.

In wetland areas, a corridor up to 10 feet wide centered on the pipeline will be maintained in an herbaceous state. In addition, trees that are located within 15 feet of the pipeline and are greater than 15 feet tall may be selectively cut. Stumps will be left in-place. All felled trees will be removed from the wetland.

Attempts will be made to prevent the invasion or spread of undesirable exotic vegetation (i.e., purple loosestrife and *Phragmites*) within wetland areas disturbed during construction. Typically, these efforts are limited to Millennium's wetland construction techniques.

The success of wetland revegetation will be monitored annually for the first 3 years after construction. Revegetation will be considered successful if the cover of native herbaceous and/or woody species is at least 80 percent of the total area, and the diversity of native species is at least 50 percent of the diversity originally found in the wetland. If revegetation is not successful at the end of 3 years, Millennium will develop and implement (in consultation with a professional wetland ecologist) a remedial revegetation plan to actively revegetate the wetland with native wetland herbaceous and woody plant species. Revegetation efforts will be continued until wetland revegetation is successful.

At certain locations on Millennium's system, listed threatened, endangered, or special concern species and their habitats have been identified. In addition, eligible cultural resources, wetlands, and other environmentally sensitive areas may also have been identified. In these instances, the CAS include maintenance provisions that will be adhered to for the life of the facility.

## VII. ENVIRONMENTAL CONSTRUCTION MANAGEMENT AND INSPECTION

### A. GENERAL

Millennium is the responsible party for compliance with the environmental conditions contained in the CAS, which includes all permits and other approvals. One or more Environmental and Agricultural Inspectors will be assigned to each spread and will report to the Chief Inspector. Agricultural and Environmental Inspectors will have peer status with all other activity inspectors.

### B. ENVIRONMENTAL INSPECTOR

The Environmental Inspector will be an individual who, by training and experience, is qualified to deal with all aspects of environmental management during construction. The Environmental Inspector is responsible for assuring that the construction activity is performed in accordance with the environmental conditions of the CAS and the ECS.

At a minimum, the Environmental Inspector(s) will be responsible for:

- ensuring compliance with the requirements of the CAS, ECS, and any permits or certificates obtained for the Project;

- verifying that the limits of authorized CWA and locations of access roads are properly marked before clearing;
- identifying stabilization needs in all areas;
- locating dewatering structures and interceptor diversions to ensure they will not direct water into known cultural resource sites or locations of sensitive species;
- verifying that trench dewatering activities do not result in the deposition of sand, silt, and/or sediment near the point of discharge into a wetland or waterbody. If such deposition is occurring, the dewatering activity will be stopped and the design of the discharge will be changed to prevent reoccurrence;
- ensuring restoration of contours and topsoil;
- approving imported soils for use in residential areas;
- ensuring that temporary erosion controls are properly installed and maintained, daily if necessary;
- inspecting temporary erosion control measures at least on a daily basis in areas of active construction or equipment operation, on a weekly basis in areas with no construction or equipment operation, and within 24 hours of each storm event with greater than 1/2 inch of rainfall;
- ensuring the repair of all ineffective temporary erosion control measures within 24 hours of identification;
- keeping records of compliance with the environmental conditions of the CAS and other federal or state environmental permits during active construction and restoration;
- establishing a program to monitor the success of restoration. Implementation of this program may be transferred to operating personnel upon completion of construction and restoration activities;
- looking for evidence of contamination and, if found, ceasing activities in that area and notifying the Chief Inspector and Millennium's Environmental Project Director and waiting for further instruction. If the contamination is determined to be hazardous, an experienced hazardous waste contractor will be mobilized to handle the waste; the hazardous waste contractor will follow a site-specific health and safety plan and standard operating procedures for working in hazardous environments.

## C. AGRICULTURAL INSPECTOR

The Agricultural Inspector will be an individual who, by training and experience, is qualified to deal with all aspects of agricultural management during construction. The Agricultural Inspector is responsible for assuring that the construction activity is performed in accordance with the agricultural conditions of the CAS and the ECS.

At a minimum, the Agricultural Inspector(s) will be responsible for the following in agricultural lands:

- ensuring compliance with the requirements of the CAS, ECS, and any permits or certificates obtained for the Project;
- verifying that the limits of authorized CWA and locations of access roads are properly marked before clearing;
- determining the depth of topsoil;
- verifying the location of drainage and irrigation systems;
- identifying stabilization needs in all areas;

- testing subsoil and topsoil to measure compaction and determine the need for corrective action;
- confirming that rock removal efforts are satisfactory;
- informing the Chief Inspector when conditions (such as wet weather) make it necessary to restrict construction activities in agricultural lands;
- determining where delayed restoration in agricultural lands is required;
- ensuring restoration of contours and topsoil;
- approving imported soils for use in agricultural lands;
- keeping records of compliance with the agricultural conditions of the CAS and other federal or state agricultural permits during active construction and restoration;
- establishing a program to monitor the success of restoration. Implementation of this program may be transferred to operating personnel upon completion of construction and restoration activities;

## D. LEAD ENVIRONMENTAL SPECIALIST

A Lead Environmental Specialist will be assigned to each spread. The Lead Environmental Specialist will report to Millennium's Environmental Project Director and will be an individual who, by training and experience, is qualified to deal with all aspects of environmental management during construction. The Lead Environmental Specialist will be responsible to work in an advisory capacity to the Chief, Agricultural, and Environmental Inspectors. The individual will also be responsible for preparing weekly reports, attending and reporting at morning Inspectors' meetings and monitoring all activities during construction. The Lead Environmental Specialist will have peer status with all other activity inspectors.

## E. ENVIRONMENTAL TRAINING

Millennium's Environmental Project Director will be responsible for assuring that the Agricultural and Environmental Inspector(s) and other Inspectors have been trained in all environmental aspects of the activity, and fully understand the environmental conditions contained in the CAS. In addition, Millennium's Environmental Project Director will ensure that all contract personnel have environmental awareness training prior to commencing work on the Project.

## F. CONTRACTOR'S ENVIRONMENTAL COMPLIANCE SPECIALIST

All contractors will be required to provide at least 1 Environmental Compliance Specialist per spread. This specialist will become thoroughly familiar with the CAS. The specialist will be responsible for the contractor's efforts to install and maintain environmental control devices and for construction in environmentally sensitive areas. The contractor's specialist will work in cooperation with Millennium's employees responsible for environmental compliance.

## G. ENVIRONMENTAL CONSTRUCTION MANAGEMENT

The Agricultural Inspector, Environmental Inspector, and Lead Environmental Specialist will have the authority to stop work on a particular construction function if it deviates from the environmental conditions of the CAS. The deviation will be reported immediately to the Chief Inspector, Environmental

or Agricultural Inspector, and Lead Environmental Specialist. Further, each functional inspector will report any environmental deviation immediately to the Inspector and the contractor's foreman. The Chief Inspector will be responsible for the resolution of the deviation after consultation with the Lead Environmental Specialist.

Stop work authority for the entire spread's construction activity rests with the Chief Inspector or Millennium's Construction Manager.

### H. ENVIRONMENTAL VARIANCES

Unapproved variances from the CAS and ECS will not be permitted. Any proposed variance will require written approval from Millennium's Environmental Project Director prior to commencing the activity. The approval for a variance will be issued only after appropriate agencies (those having jurisdiction over the affected resources, e.g. COE for "waters of the United States", DEC for issues relating to the water quality certification and/or state jurisdictional wetlands, and FERC for all issues) have been contacted. Such contact will typically consist of a telephone call from Millennium's Environmental Project Director followed by written documentation if determined necessary by the regulatory agency. In instances where written approval is not practical (i.e., emergencies and weekends), verbal approval may be given provided that written confirmation is provided as soon as possible.

## VIII. EMERGENCY CONSTRUCTION

In the event of an emergency, the Chief Inspector will take such action as is necessary to contain the emergency giving due regard to minimizing environmental impact. In conjunction with other Millennium policies, the requirements contained in the ECS will be followed as closely as possible. Emergencies will be reported to the appropriate agencies when time allows.

## ATTACHMENTS

List of Tables

**Table 1 - Definition of Terms**

**Table 2a - Seed Mix Requirements for CWA and Waterbody Crossings**

**Table 2b - Seed Mix Requirements for Temporary Stabilization**

**Table 2c - Seed Mix Requirements in Wetlands**

**Table 3 - State and Local Spill Emergency Contacts**

List of Figures

**Figure 1 - Typical Upland Pipeline Construction Sequence**

**Figure 2 - Typical Upland Construction Work Area**

**Figure 3 - Temporary Construction Gate**

**Figure 4 - Typical Topsoil Conservation in Residential Areas**

**Figure 5 - Interceptor Diversions (page 1 of 2)**

**Figure 5 - Interceptor Diversions (page 2 of 2)**

**Figure 6 - Sediment Filter Device - Silt Fencing**

**Figure 7 - Sediment Filter Device - Staked Bales**

**Figure 8 - Temporary Road Entrance - Rock Pads**

**Figure 9 - Temporary Road Entrance - Terra-Mats**

**Figure 10 - Typical Erosion Control Measures at Road Crossings**

**Figure 11 - Typical Trail Planting**

**Figure 12 - Trenchline Barriers and Breakers**

**Figure 13 - Sediment Trap**

**Figure 14 - Erosion Control Blanket**

**Figure 15 - Typical Topsoil Conservation in Agricultural Land**

**Figure 16 - Field Tile Replacement Methods**

List of Figures (continued)

**Figure 17 - Typical Agricultural Land Cross Section**

**Figure 18 - Typical Stream Crossing - Dry-Ditch (Flume)**

**Figure 19 - Typical Stream Crossing - Dry-Ditch (Dam and Pump)**

**Figure 20 - Typical Stream Crossing - Wet-Ditch**

**Figure 21 - Typical Stream Crossing - Intermittent Streams**

**Figure 22- Temporary Equipment Crossing - Culvert and Stone**

**Figure 23 - Temporary Equipment Crossing - Equipment Pads**

**Figure 24 - Typical Wetland Crossing**

**Figure 25 - Typical Forested Wetland Plantings**

**Figure 26 - Right-of-Way Maintenance - Wetlands**

**Figure 27 - Right-of-Way Maintenance - Perennial Streams**

**Figure 28 - Right-of-Way Maintenance – Environmentally Sensitive Areas**

## TABLE 1
## DEFINITION OF TERMS*

**AGRICULTURAL INSPECTOR:**
The Inspector responsible for agricultural compliance.

**AGRICULTURAL LANDS:**
Permanent or rotated croplands, improved pasturelands and hayfields. Typically, a rotated field can be identified by the lack of woody vegetation.

**CAS:**
Construction Alignment Sheets are the drawings used to portray the Project routing, environmental details, and other information needed to construct the Project. These drawings are included in the bid documents and subsequent construction contract(s).

**CHIEF INSPECTOR:**
The Chief Inspector reports directly to the Zone Construction Manager and is the individual responsible for managing all inspection activities during construction. The Chief Inspector supervises a team of inspectors including clearing, grading, welding, backfilling, restoration, and environmental.

**COE:**
U.S. Army Corps of Engineers

**CWA:**
The construction work area includes but is not limited to permanent and temporary ROW, contractor's yards, pipe and materials storage yards, and access roads.

**EASEMENT AGREEMENT:**
Legal document used to secure Company rights for construction, operation and maintenance of the facilities. The easement agreement normally includes the specific special conditions negotiated between the Company and the landowner that will be adhered to during construction, operation and maintenance of the facilities.

**ECS:**
Environmental Construction Standards

**ENVIRONMENTAL INSPECTOR:**
The Inspector responsible for environmental compliance.

**EPA:**
Environmental Protection Agency

**FINAL GRADING:**
Includes returning the CWA as closely as practical to its original contour, redistributing conserved topsoil, soil compaction testing in agricultural lands, and installing final interceptor diversions.

**FWS:**
U.S. Fish and Wildlife Service

## TABLE 1 (continued)
## DEFINITION OF TERMS*

**HIGH QUALITY STREAM:**
A cold water fishery or significant warm water fishery classified as C(t) or higher by the New York State Department of Environmental Conservation.

**IMMEDIATELY:**
Without interval of time; "right now".

**INSPECTOR:**
Any of the Chief Inspector, Agricultural Inspector, Environmental Inspector, Lead Environmental Specialist, or any other inspector assigned to do an environmental task.

**INTERMEDIATE WATERBODY:**
A waterbody greater than 10 and less than 100 feet at the water's edge at the time of construction.

**INTERMITTENT WATERBODY:**
A waterbody channel which generally carries water in the Spring or immediately after a rain event; designated on topographic maps with a broken line and indicated in the CAS stream crossing table.

**MILLENNIUM:**
Millennium Pipeline Company, L.P.

**MILLENNIUM'S ENVIRONMENTAL PROJECT DIRECTOR:**
The Environmental Project Director reports directly to the Project Director and is the individual responsible for managing activities needed to acquire all environmental and archaeological permits and approvals for the Project.

These activities include:
- preparation of the environmental and cultural resource reports, and/or permit applications;
- answering data requests from FERC and other agencies;
- preparing, obtaining approvals and providing training on the environmental construction plans;
- coordinating permitting activities with other disciplines to ensure consistency for the Project.

The Environmental Project Director is also responsible for compliance with environmental requirements during construction and restoration activities.

**MINOR WATERBODY:**
A waterbody less than or equal to 10 feet wide at the water's edge at the time of construction.

**MSDS:**
Material Safety Data Sheet

**NOISE SENSITIVE AREA:**
Includes residences, schools, churches, cemeteries, hospitals, and outdoor amphitheaters.

## TABLE 1 (continued)
## DEFINITION OF TERMS*

**NRCS:**
Natural Resource Conservation Service

**ORV:**
Off-road vehicle.

**PERENNIAL WATERBODY:**
A waterbody which generally flows all year in years of normal rainfall; waterbody level is generally lowest in the Fall, highest in the Spring; designated with a solid line on topographic maps and indicated in the CAS stream crossing table.

**PROMPTLY:**
By the end of the work day.

**RESTORATION:**
Includes fertilizing, liming, disking, seeding and mulching, and crimping mulch.

**ROW:**
Right-of-way.

**SEDIMENT FILTER DEVICE:**
Properly embedded silt fence or staked bales (figures 6 and 7).

**SPCC:**
Spill Prevention Control and Countermeasure Plan

**STEEP SLOPE:**
Slope of 33% or greater.

**TEMPORARY STABILIZATION MEASURES:**
Includes installing temporary interceptor diversions and sediment filter devices, mulching critical areas, and seeding if necessary to hold soil in place until final grading and restoration can be accomplished.

**UPLAND CONSTRUCTION:**
All areas that are not waterbodies, rivers, or wetlands.

**WATERBODY:**
Includes any natural or artificial waterbody, river, or drainage with perceptible flow at the time of crossing, and other permanent waterbodies such as ponds and lakes.

**WETLAND:**
An area of special concern with soils prone to holding water for long periods of time, generally also characterized by distinctive plants such as rushes, sedges, cattails, or certain shrubs/trees. Includes any area that satisfies the requirements of the current Federal methodology for identifying and delineating wetlands.

*Includes all grammatical variations of each term.

## TABLE 2a

## SEED MIX REQUIREMENTS FOR CWA AND WATERBODY CROSSINGS

| Type | | Rate (lbs/acre)[1] |
|---|---|---|
| **Seed** | Orchard Grass and/or Switch Grass | 20 |
| | Birdsfoot-Trefoil (Empire)[2] | 7 |
| | Annual Rye | 10 |
| **Fertilizer** | 10-10-10 (or equivalent) | 600[3] |
| **Crushed Limestone** | | 4000 |
| **Mulch** | Hay or Straw | 4000 |

1 Pure Live seed within 12 months of testing.
2 Legumes to be inoculated at 4 times recommended rate.
3 Where wood chips are spread, additional slow release nitrogen will be spread (12 to 15 lbs per ton of chips.)

## TABLE 2b

## SEED MIX REQUIREMENTS FOR TEMPORARY STABILIZATION

| Type | | Rate (lbs/acre) |
|---|---|---|
| **Seed** | Annual Rye | 40 |
| **Mulch** | Hay or Straw | 6000 |

## TABLE 2c

## SEED MIX REQUIREMENTS IN WETLANDS

| Type | | Rate (lbs/acre) |
|---|---|---|
| **Seed** | Annual Rye* | 40 |

* Annual Rye is used as a temporary re-vegetative measure until indigenous plants re-establish cover. A monitoring program will be in effect to insure adequate cover is established.

## TABLE 3

## STATE AND LOCAL SPILL EMERGENCY CONTACTS

NYSDEC Hotline at 800/457-7362 (outside of NY 518/457-7362)

Steuben County Emergency Services
6979 Rumsey St Ext
Bath, NY 14810
607-664-2801 (911 within local area)

Chemung County Emergency Management
406 East Church St
Elmira, NY 14901
607-735-8600 (911 within local area)

Tioga Emergency Management Office
103 Corporate Drive
Owego, NY
607-687-1010 (911 within local area)

Broome Co. Emergency Services
153 Lieutenant VanWinkle Drive
Binghamton, NY 13905
607-778-1911 (911 within local area)

Delaware County Emergency Services
Troop C Barracks
Sydney, NY 13838
607-563-3349
(911 within local area)

Sullivan County Emergency Control
PO Box 109
White Lake, NY 12786
845-583-7100
(911 within local area)

Orange County Emergency Management
255 Main St
Goshen, NY 10924
845-291-3911 or 2911 (911 within local area)

Rockland County Dispatch
Suffern, NY
845-364-8600 (911 within local area)

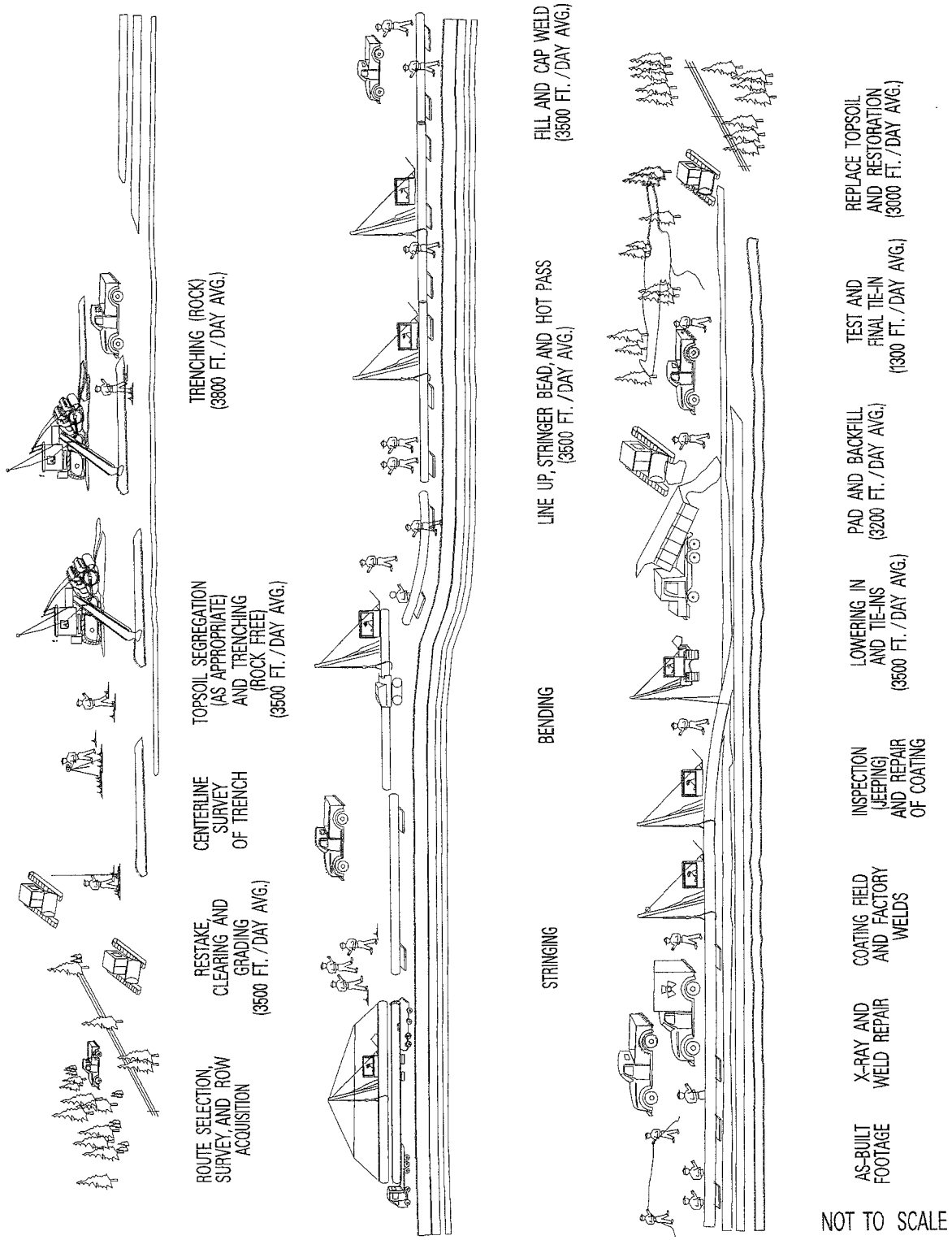


MILLENNIUM PIPELINE℠

ENVIRONMENTAL CONSTRUCTION STANDARDS

TYPICAL UPLAND PIPELINE CONSTRUCTION SEQUENCE

FIGURE 1

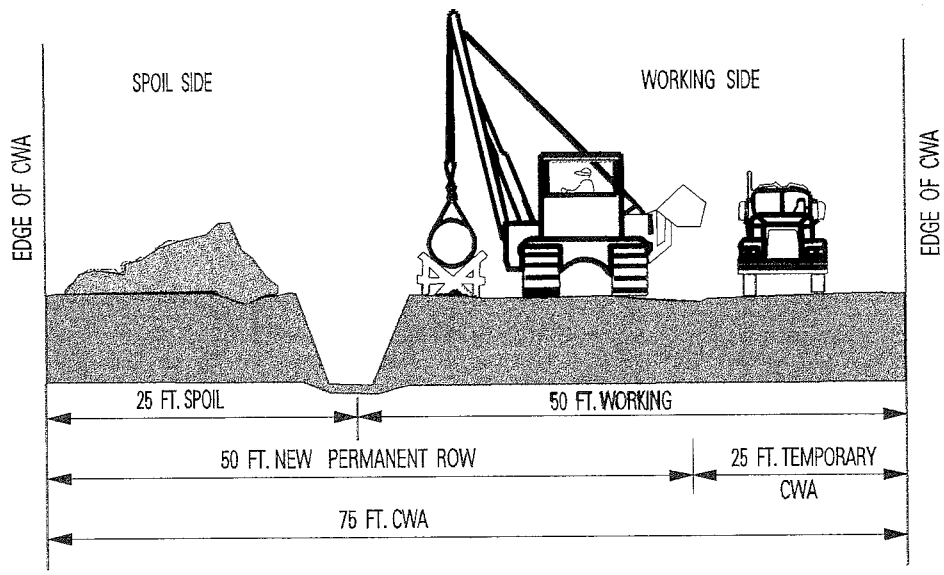


NEW ROW & LIFT AND LAY

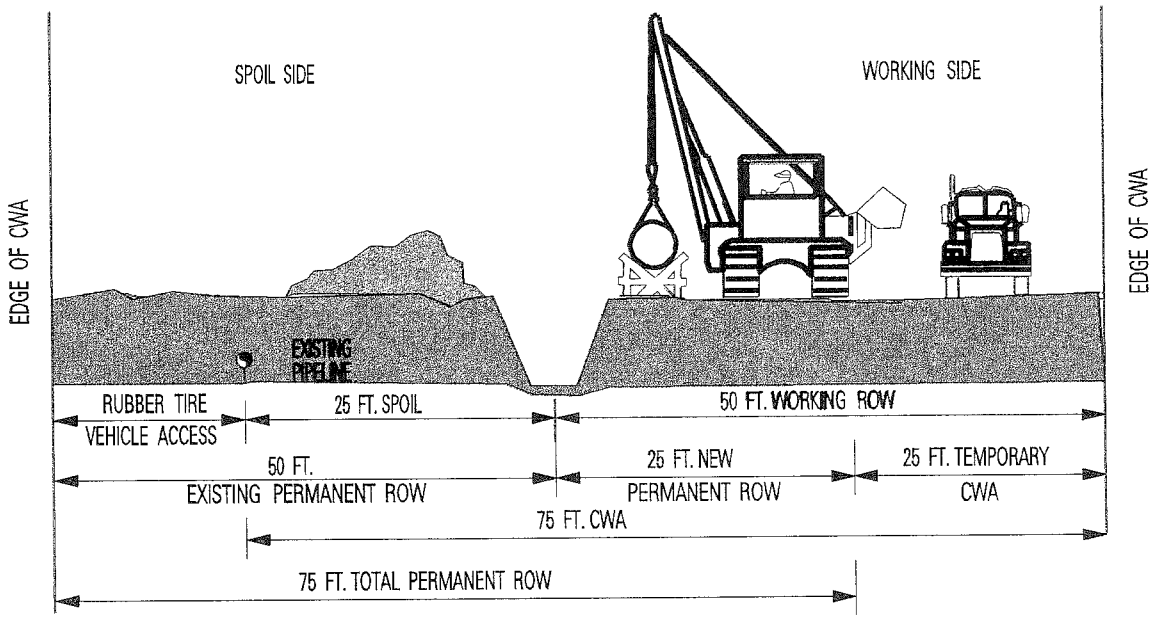


PARALLEL TO EXISTING ROW

NOTES: 1. THE DIMENSIONS SHOWN ON THIS FIGURE ARE TYPICAL, REFER TO CONSTRUCTION ALIGNMENT SHEETS FOR SPECIFIC CWA DIMENSIONS.

NOT TO SCALE

| | | |
|---|---|---|
| MILLENNIUM PIPELINE℠<br>ENVIRONMENTAL CONSTRUCTION STANDARDS | TYPICAL UPLAND CONSTRUCTION WORK AREA | FIGURE 2 |

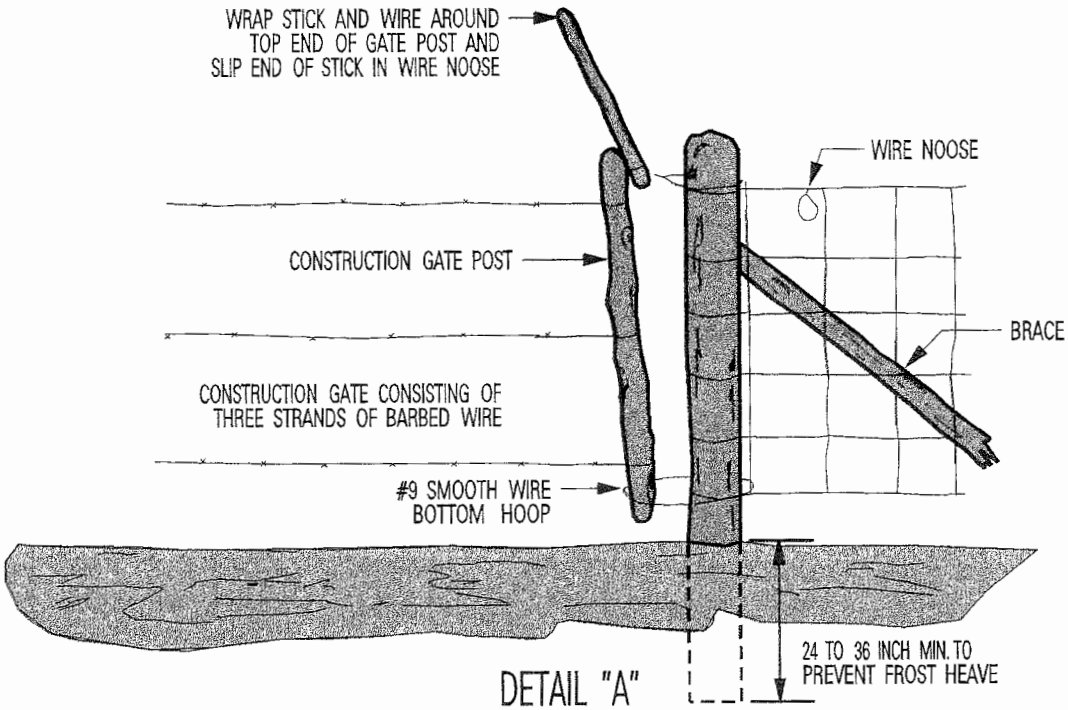


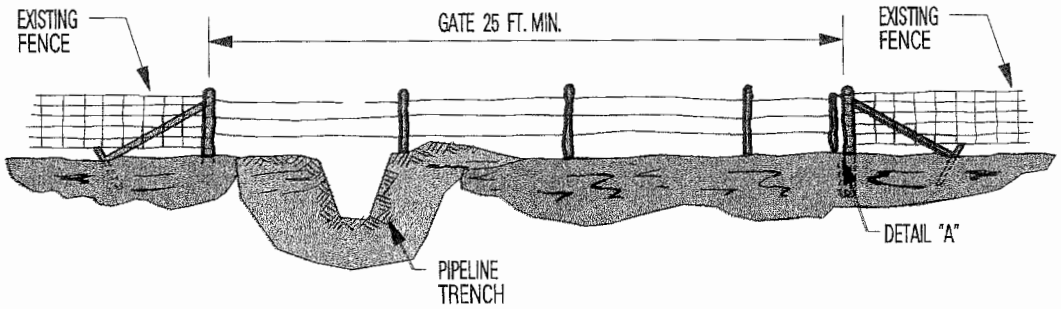


NOTES:
1. IF EXISTING FENCE POSTS ARE STEEL "T" BAR TYPE, THEN REMOVE THE STEEL "T" BAR POST ON BOTH SIDES OF THE GATE OPENING AND REPLACE WITH TEMPORARY WOODEN POSTS, BRACED AS SHOWN.
2. SUITABLE SUBSTITUTES FOR THE STICK AND WIRE GATE FASTENER ARE PERMISSIBLE.

NOT TO SCALE

| | | |
|---|---|---|
| MILLENNIUM PIPELINE℠<br>ENVIRONMENTAL CONSTRUCTION STANDARDS | TEMPORARY CONSTRUCTION GATE | FIGURE 3 |

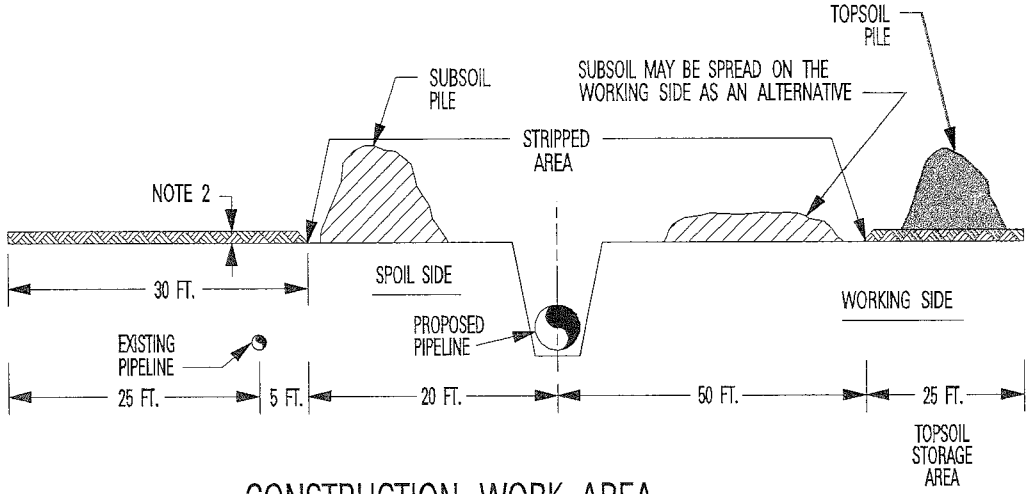


CONSTRUCTION WORK AREA

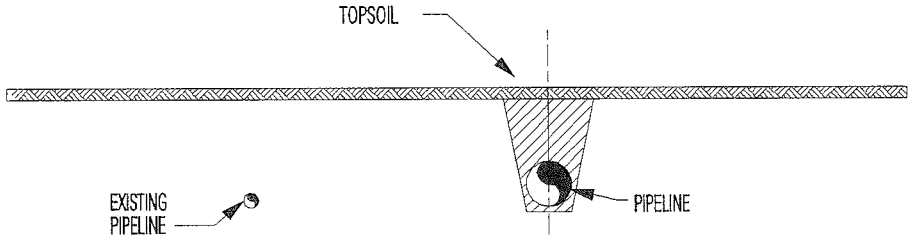


RESTORED

NOTES:
1. OTHER CONFIGURATIONS OF TOPSOIL AND SUBSOIL ARE ACCEPTABLE PROVIDED SOILS ARE KEPT SEPARATE.
2. UP TO 12 INCHES OF TOPSOIL WILL BE REMOVED.
3. TOPSOIL AND SUBSOIL PILES WILL BE ADEQUATELY PROTECTED FROM EROSION AND SEDIMENTATION BY USE OF SEDIMENT FILTER DEVICES OR MULCH.
4. TOPSOIL REPLACEMENT IS ACCEPTABLE ALTERNATIVE TO TOPSOIL SEGREGATION IN RESIDENTIAL AREAS.

NOT TO SCALE

| | | |
|---|---|---|
| MILLENNIUM PIPELINE℠<br>ENVIRONMENTAL CONSTRUCTION STANDARDS | TYPICAL TOPSOIL CONSERVATION IN RESIDENTIAL AREAS | FIGURE 4 |

INTERCEPTOR DIVERSIONS

Interceptor diversions are the most common and effective device used for erosion control on the CWA. During construction, temporary diversions are installed to control water on the graded CWA. During restoration final diversions are installed to protect the CWA from erosion until the vegetation reestablishes on the disturbed areas.

Temporary diversions are generally made by building a curb 8 to 14 inches high across the CWA. The curbs are shaped to allow passage of construction equipment and inspector vehicles. The diversion should not have a gradient of more than 5% (preferably 2%), and must drain either into the trench or off the CWA. Where water is directed off the CWA, the outlet will be protected by a sediment filter device or heavy vegetation. Temporary diversions may be broken down by construction equipment during the workday, but will be restored by the end of each day. Temporary diversions will be spaced along the CWA in accordance with Figure 5. The actual number of temporary diversions may vary from that of final diversions because the construction CWA's artificial grade may reduce the slope.

Final diversions typically consist of a curb 16 to 20 inches high below a shallow swale. The curb is constructed of compacted earth fill with side slopes of 2:1 or flatter to allow passage of maintenance equipment. The diversions should extend across the entire CWA and drain water with no more than a 2% to 5% gradient. The outlets of final diversions are stabilized with sediment filter devices, rock, brush, or heavy vegetation. Final diversions will be spaced along the CWA in accordance with Figure 5 (or as shown on the Construction Alignment Sheets), and will tie into existing diversions where present. In places where final grade creates side slopes or slopes which break in more than one direction, diversion installation may need to vary to create an outslope of 2% which will carry water off the CWA.

Alternative diversion construction may be used in areas where an earthen diversion is impractical. In these instances, temporary diversions may be constructed with sediment filter devices.

| | | |
|---|---|---|
| MILLENNIUM PIPELINE℠<br>ENVIRONMENTAL CONSTRUCTION STANDARDS | INTERCEPTOR DIVERSIONS | FIGURE 5<br>(PAGE 1 OF 2) |

NOTE 1

| SLOPE | SPACING |
|---|---|
| < 5% | NONE |
| 5–15% | 300 FEET |
| 15–30% | 200 FEET |
| >30+% | 100 FEET |

INTERCEPTOR SPACING

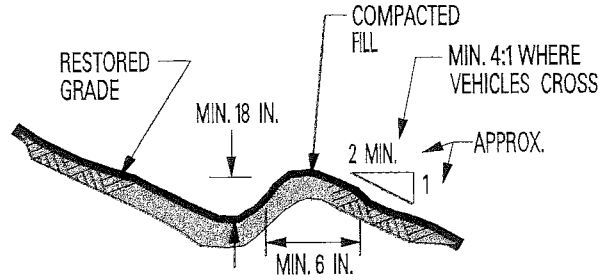


FINAL DIVERSION CROSS-SECTION

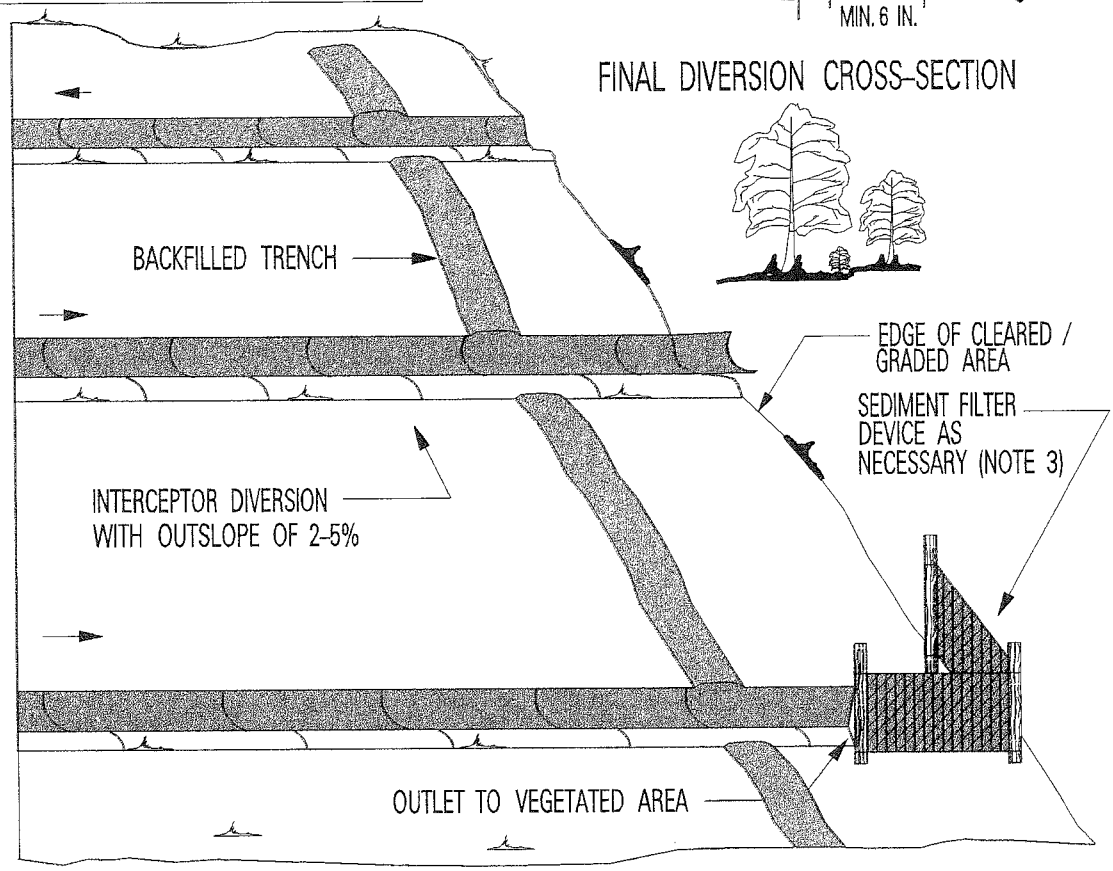


NOTES:

1. SPACING USED FOR BOTH TEMPORARY AND FINAL INTERCEPTOR DIVERSIONS.
2. TEMPORARY INTERCEPTOR DIVERSIONS WILL BE MAINTAINED DURING THE CONSTRUCTION PHASE UNTIL FINAL INTERCEPTOR DIVERSIONS ARE INSTALLED.
3. IF EXISTING GROUND COVER IS SPARSE, SECURE SEDIMENT FILTER DEVICE IN OUTLET.
4. THE DIVERSION MAY BE EXTENDED OFF THE CWA, IF NECESSARY, TO PROVIDE AN ADEQUATE OUTLET.
5. DIVERSION OUTLETS WILL ALTERNATE FROM SIDE TO SIDE WHENEVER POSSIBLE.
6. INSTALL DIVERSIONS TO TAKE ADVANTAGE OF NATURAL CROSS-SLOPE SWALES.

NOT TO SCALE

| | | |
|---|---|---|
| MILLENNIUM PIPELINE℠<br>ENVIRONMENTAL CONSTRUCTION STANDARDS | INTERCEPTOR DIVERSIONS | FIGURE 5 (PAGE 2 OF 2) |

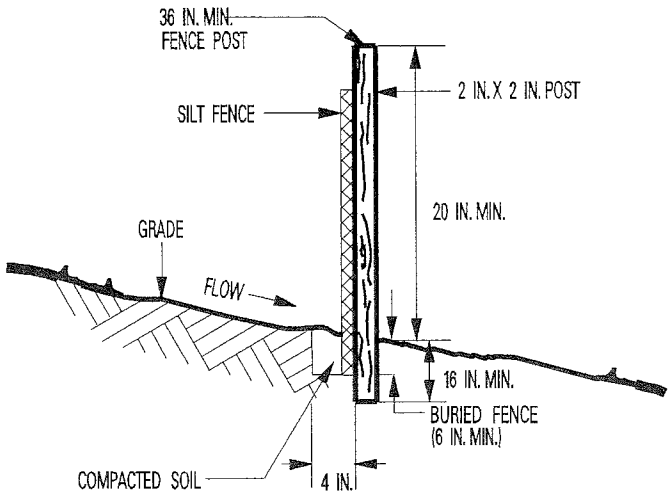


SIDE VIEW

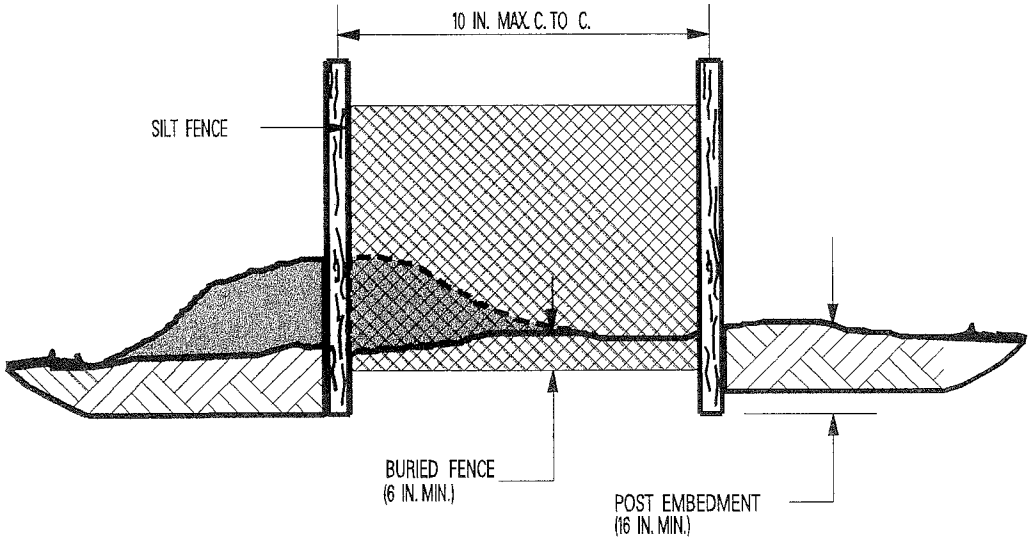


FRONT VIEW

NOTE: SILT FENCE CAN ALSO BE INSTALLED (USING THE SAME SPECIFICATIONS AS PRESENTED ABOVE) IN OTHER SITUATIONS FOR EROSION AND SEDIMENTATION CONTROL.

NOT TO SCALE

| | | |
|---|---|---|
| MILLENNIUM PIPELINE℠<br>ENVIRONMENTAL CONSTRUCTION STANDARDS | SEDIMENT FILTER DEVICE SILT FENCING | FIGURE 6 |

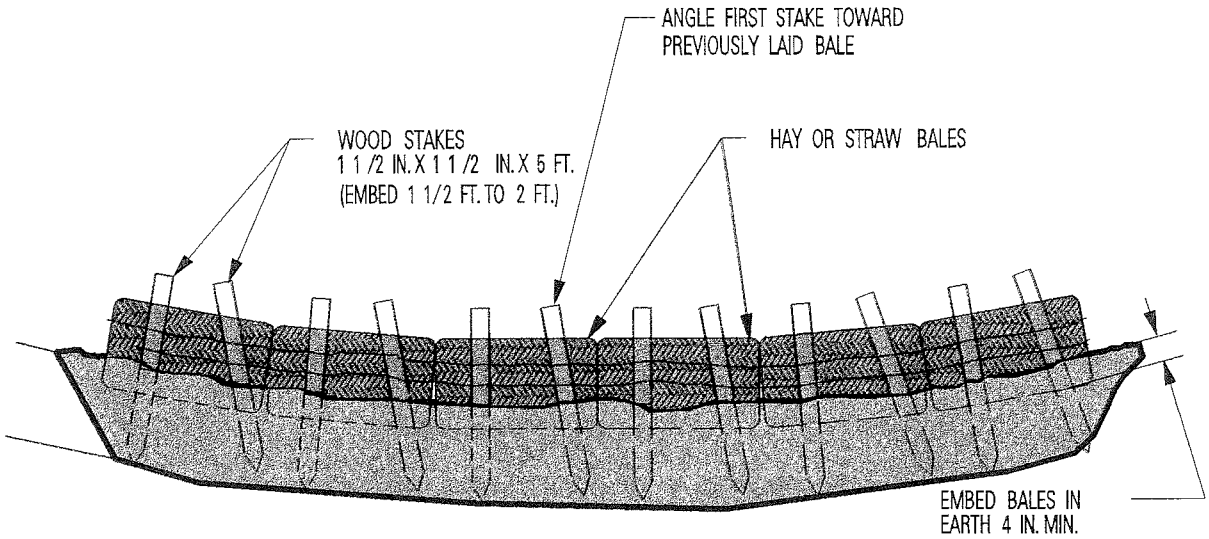


SIDE VIEW

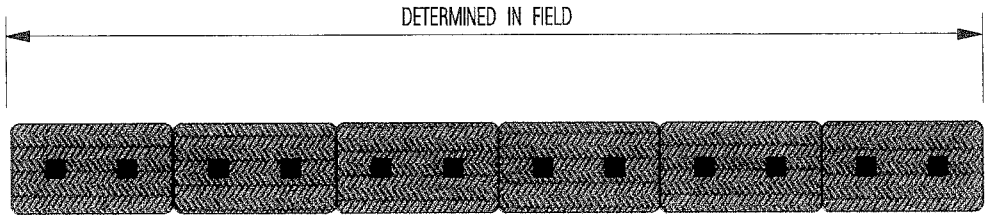


TOP VIEW

NOT TO SCALE

| | | |
|---|---|---|
| MILLENNIUM PIPELINE℠<br>ENVIRONMENTAL CONSTRUCTION STANDARDS | SEDIMENT FILTER DEVICE STAKED BALES | FIGURE 7 |

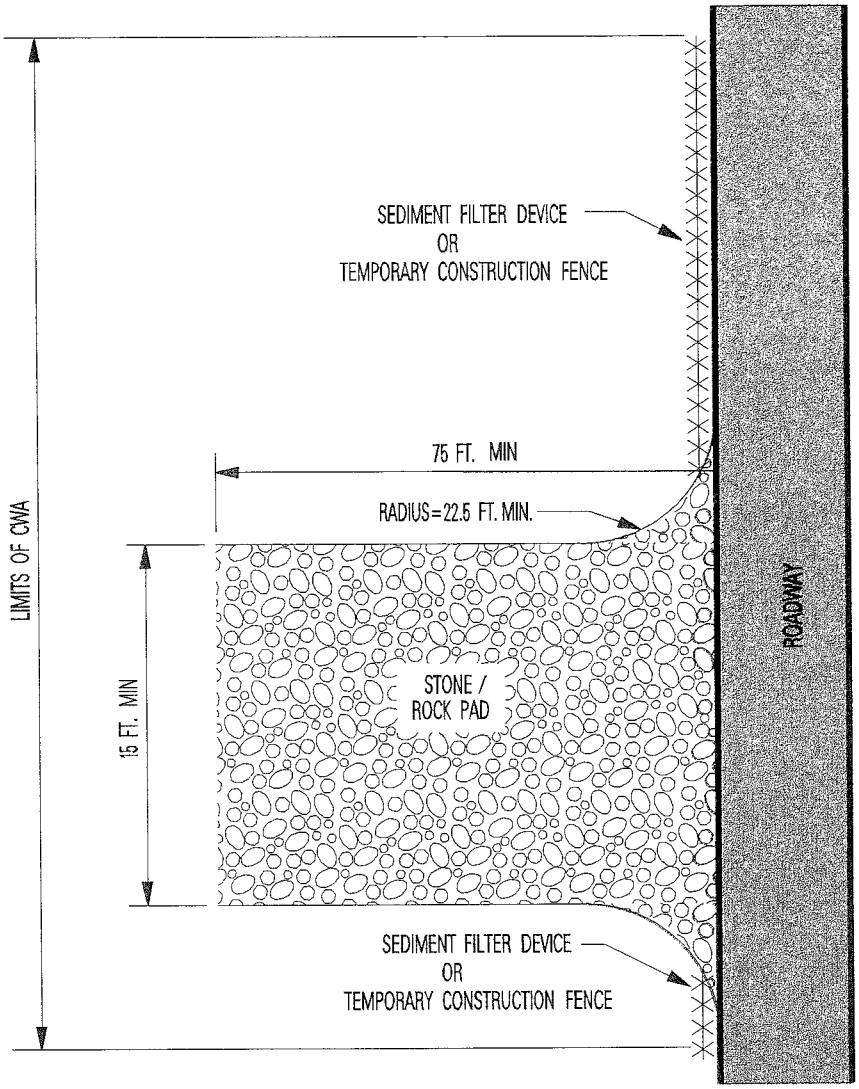


NOTES:

1. STONE SIZE WILL BE AASHTO NUMBER 1 COARSE AGGREGATE OR EQUIV. (4 INCH DIAMETER MINIMUM)
2. ROCK PAD WILL BE AT LEAST 6 INCHES THICK.
3. THE ROAD ENTRANCE WILL HAVE A GEOTEXTILE FABRIC BENEATH THE ROCK PAD.
4. IF ROCK PAD BECOMES COVERED WITH MUD SO AS TO BECOME INEFFECTIVE, ADDITIONAL STONE WILL BE ADDED.
5. ALL STONE AND FABRIC MUST BE REMOVED DURING ROW RESTORATION.
6. REMOVE TOPSOIL PRIOR TO INSTALLATION IN AGRICULTURAL LAND.

NOT TO SCALE

| | | |
|---|---|---|
| MILLENNIUM PIPELINE℠<br>ENVIRONMENTAL CONSTRUCTION STANDARDS | TEMPORARY ROAD ENTRANCE ROCK PADS | FIGURE 8 |

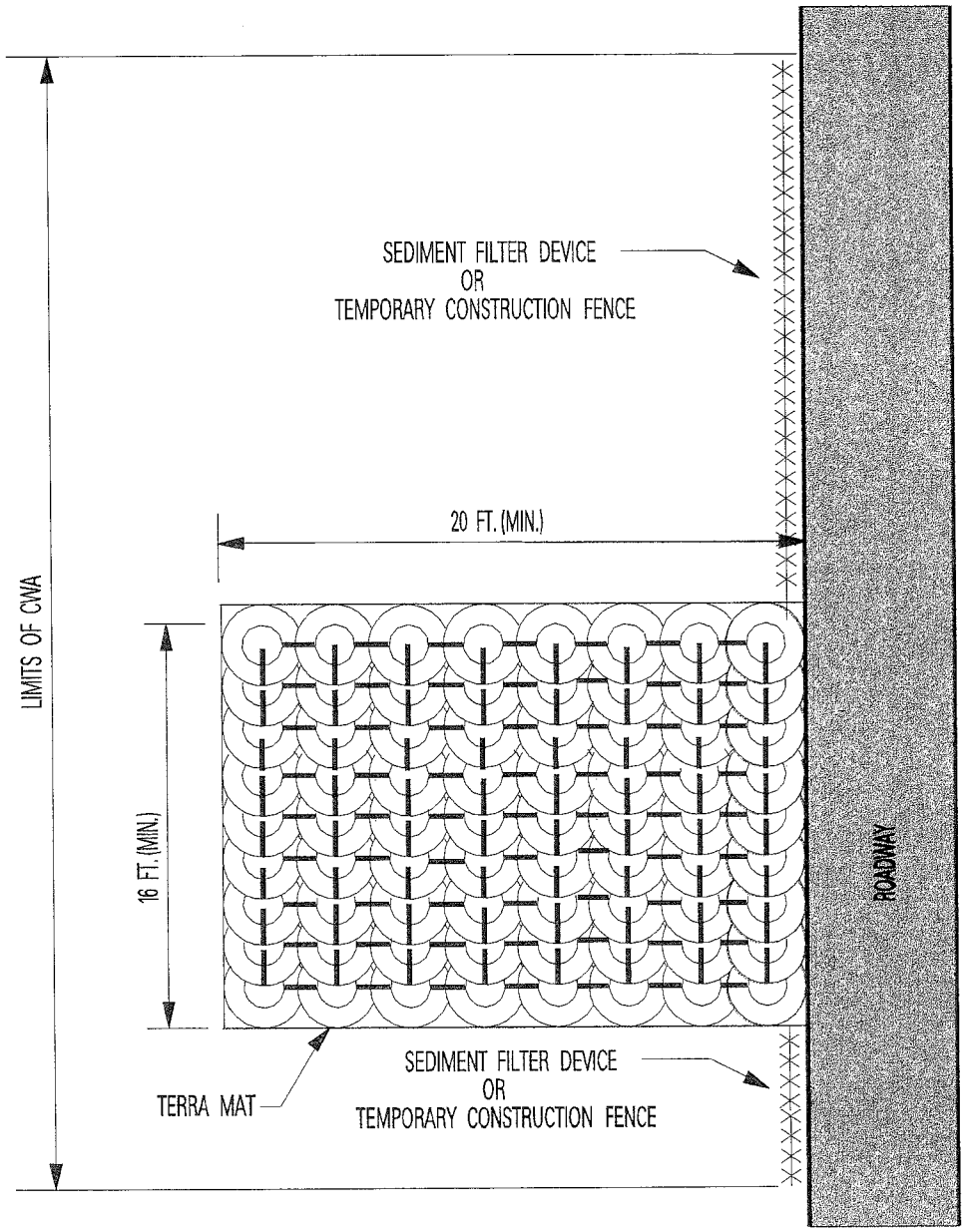


NOTES:
1. TERRA MATS ARE CONSTRUCTED BY OVERLAPPING TIRES AND INTERCONNECTED CABLE.
2. TERRA MATS WILL BE UNDERLAIN WITH GEOTEXTILE FABRIC.
3. TERRA MATS WILL BE MAINTAINED SO AS NOT TO ALLOW EXCESS MUD TO ACCUMULATE.

NOT TO SCALE

| | | |
|---|---|---|
| MILLENNIUM PIPELINE℠<br>ENVIRONMENTAL CONSTRUCTION STANDARDS | TEMPORARY ROAD ENTRANCE TERRA MATS | FIGURE 9 |

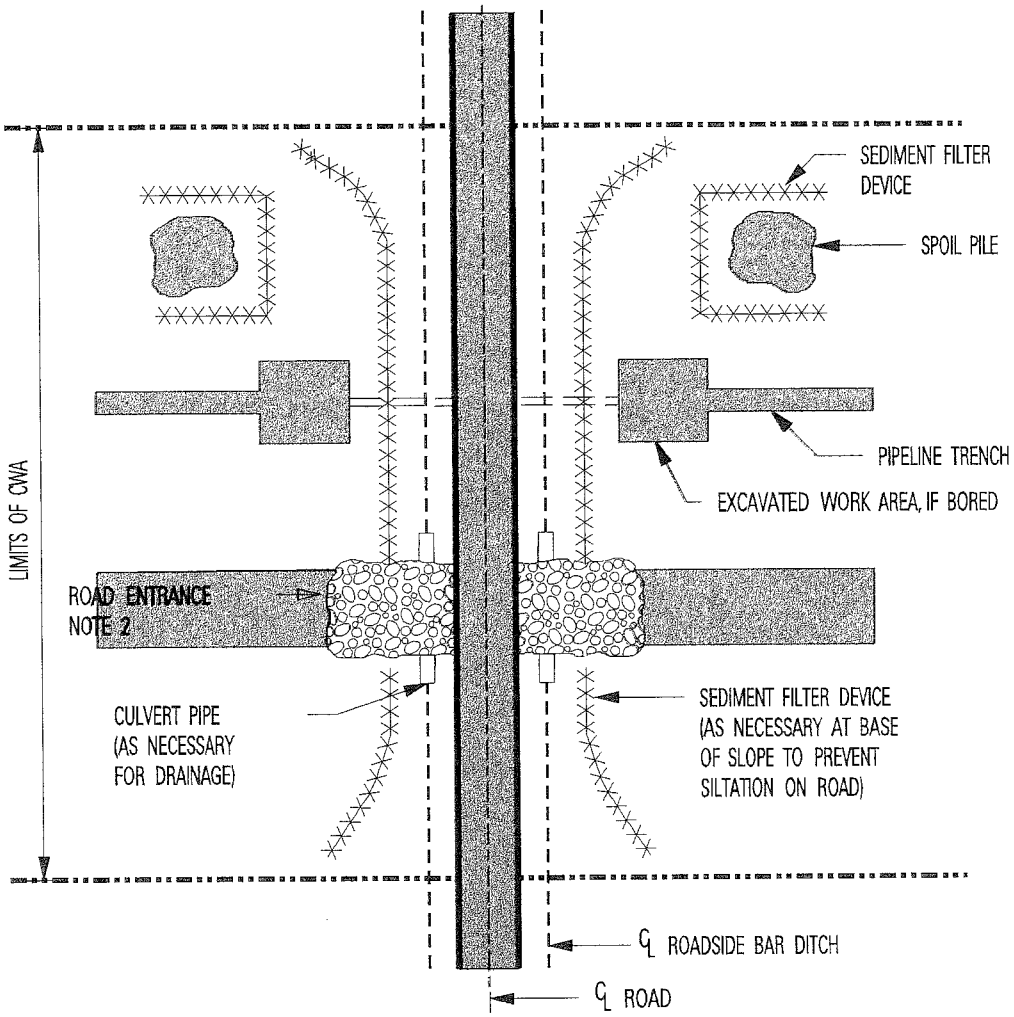


NOTES:
1. SIMILAR PROCEDURES WILL BE USED AT RAILROAD CROSSINGS.
2. REFER TO FIGURES 8 AND 9 FOR TYPES OF ROAD ENTRANCES.

NOT TO SCALE

MILLENNIUM PIPELINE℠
ENVIRONMENTAL CONSTRUCTION STANDARDS

TYPICAL EROSION CONTROL MEASURES AT ROAD CROSSINGS

FIGURE 10

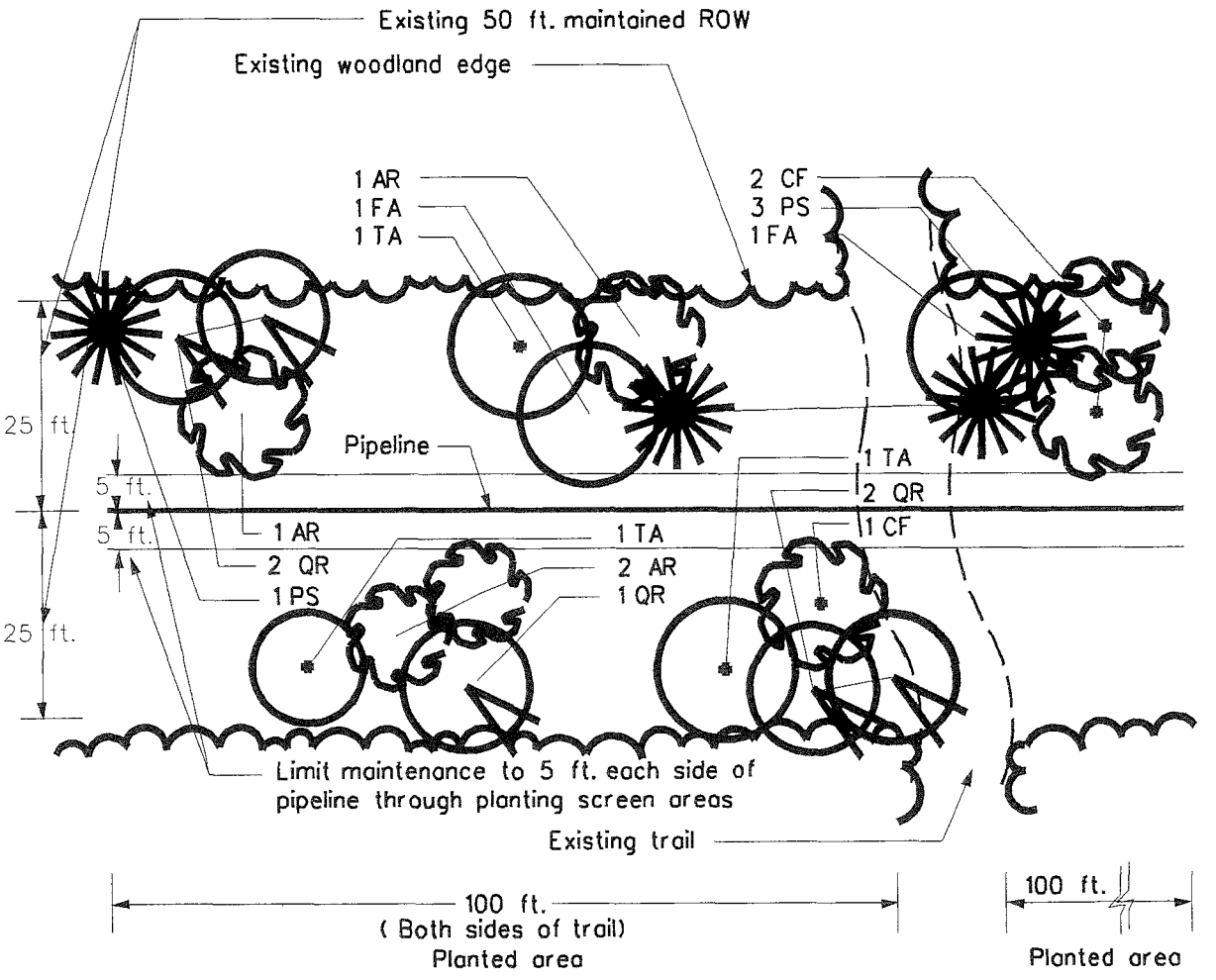


| Typical Plant List-Trail Crossing | | | |
|---|---|---|---|
| Symbol | Botanical Name | Common Name | Size/Comments |
| TA | Tilia americana | American linden (Basswood) | 1 1/2in. cal. B&B |
| AR | Acer rubrum | Red maple | 1 1/2in. cal. B&B |
| QR | Quercus rubrum | Red oak | 1 1/2in. cal. B&B |
| FA | Fraxinus americana | White ash | 1 1/2in. cal. B&B |
| PS | Pinus strobus | White pine | 4 ft. ht. B&B |
| CF | Cornus florida | Flowering dogwood | 4 ft. ht. B&B |

B&B = balled and burlapped
cal. = caliper

NOT TO SCALE

MILLENNIUM PIPELINE℠
ENVIRONMENTAL CONSTRUCTION STANDARDS

TYPICAL TRAIL PLANTING

FIGURE 11

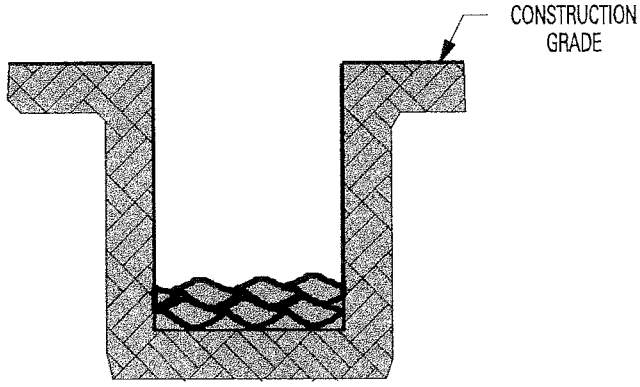


BEFORE PIPE INSTALLATION

BREAKER

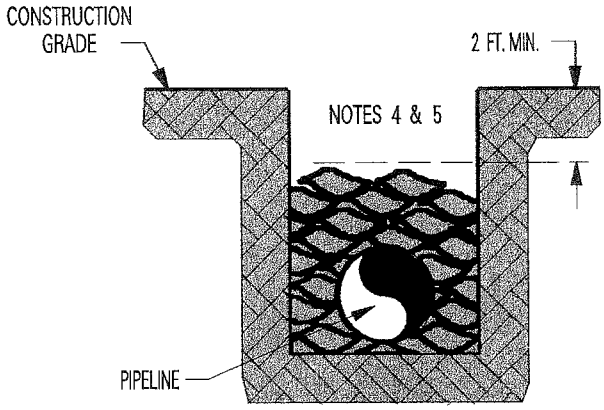


AFTER PIPE INSTALLATION

BARRIER

FRONT VIEW

NOTES:

1. INSTALL BREAKERS EVERY 15 FT. PROMPTLY AS THE TRENCH IS COMPLETED.
2. INSTALL BARRIER JUST UPHILL OF EVERY INTERCEPTOR DIVERSION PROMPTLY AS THE PIPE IS INSTALLED IN THE TRENCH.
3. PRIOR TO LOWERING IN, REMOVE THE ROCKS.
4. INSTALL SACKS FOR BARRIERS TO TOP OF TRENCH ON STEEP GRADES THAT ARE NOT USED FOR FARMING.
5. TOP OF TRENCHLINE BARRIER WILL BE BELOW PLOW DEPTH IN AGRICULTURAL LAND.
6. TOPSOIL WILL NOT BE USED TO CONSTRUCT THE BREAKERS OR BARRIERS.
7. FOAM OR OTHER SUBSTITUTES ARE NOT PERMISSIBLE.
8. ENSURE SANDBAGS ARE SNUG AGAINST EACH OTHER, THE PIPE, THE TRENCH WALL AND TRENCH FLOOR.

NOT TO SCALE

| | | |
|---|---|---|
| MILLENNIUM PIPELINE℠<br>ENVIRONMENTAL CONSTRUCTION STANDARDS | TRENCHLINE BARRIERS AND BREAKERS | FIGURE 12 |

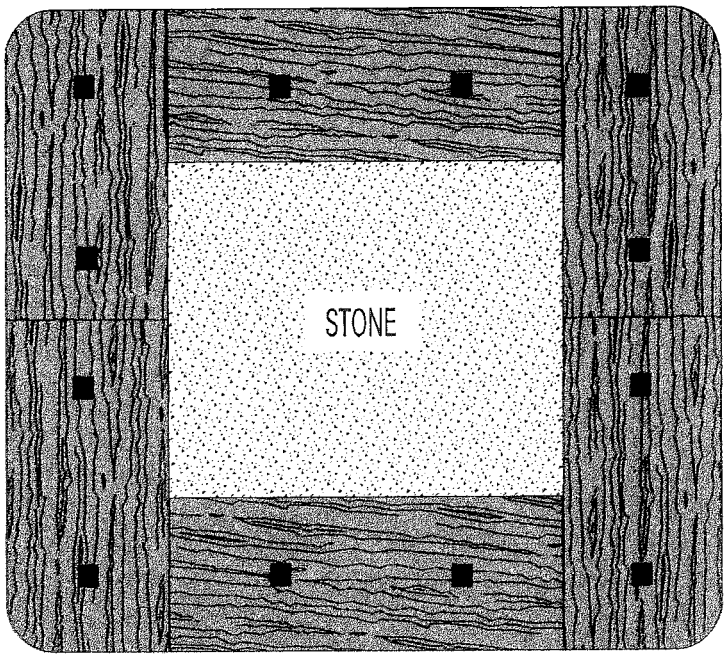


PLAN VIEW

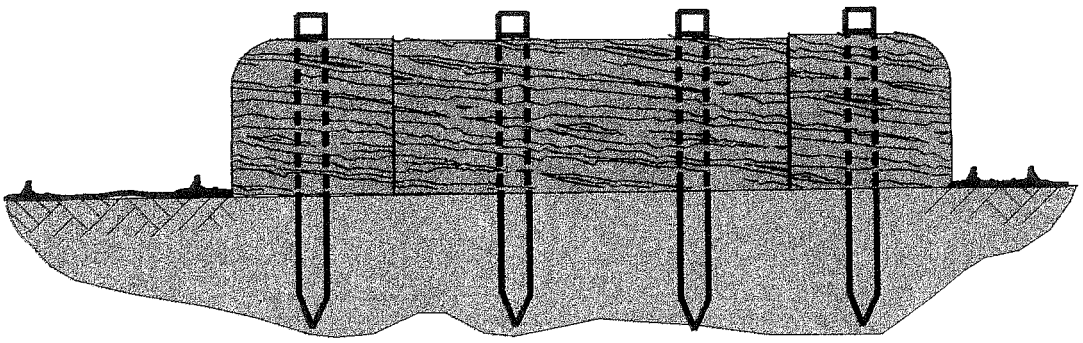

SIDE VIEW

NOTES:

1. INSTALL BALES AS SHOWN. IF ADDITIONAL STORAGE VOLUME IS NECESSARY, SECURE ADDITIONAL BALES ON TOP OF INITIAL BOTTOM LAYER AND/OR BY INCREASING THE NUMBER OF BALES IN BOTTOM LAYER.
2. SECURE EACH BALE & EACH LAYER OF BALES USING EITHER TWO REBARS OR TWO WOODEN STAKES PER BALE.
3. PLACE A 5 TO 6 INCH DEEP LAYER OF 3/4 TO 1 INCH CLEAN STONE ON GROUND COVER INSIDE BALES OR INSTALL GEOTEXTILE FABRIC IN THE BOTTOM AND PLACE DISCHARGE HOSE IN A SEDIMENT FILTER BAG.
4. THE SEDIMENT TRAP WILL NOT BE GREATER THAN TWO BALES IN HEIGHT FOR SIX-BALE BOTTOM CONSTRUCTION UNLESS THE TRAP WALLS ARE REINFORCED.

NOT TO SCALE

| | | |
|---|---|---|
| MILLENNIUM PIPELINE℠<br>ENVIRONMENTAL CONSTRUCTION STANDARDS | SEDIMENT TRAP | FIGURE 13 |

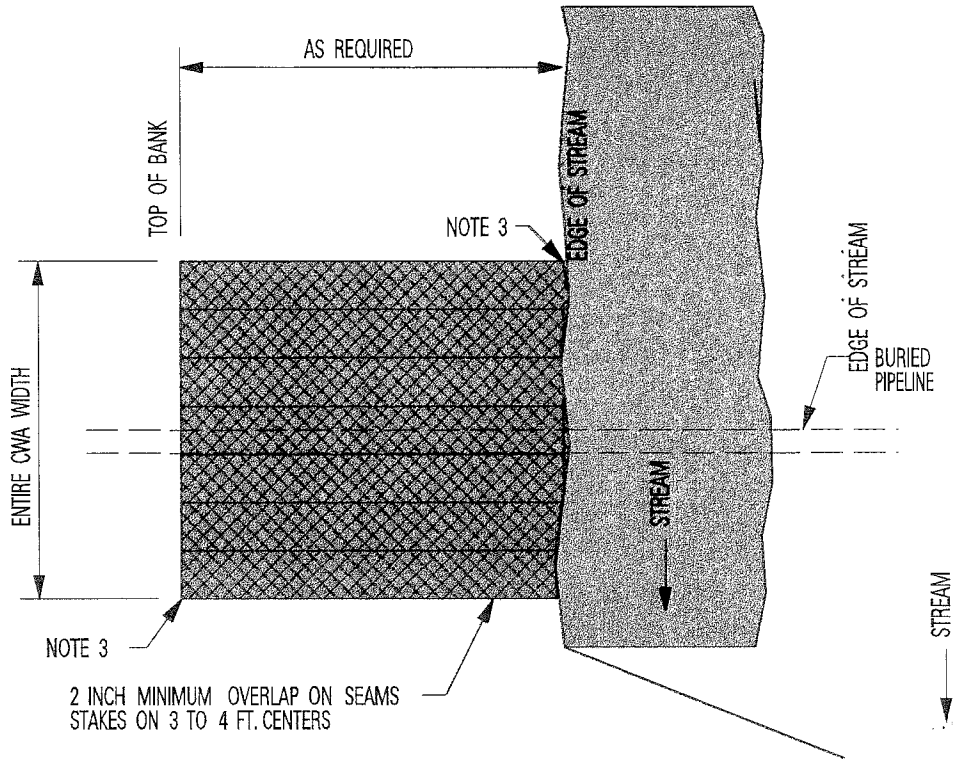


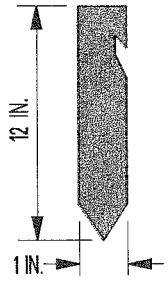


WOODEN STAKES

NOTES:
1. INSTALL JUTE NETTING DURING RESTORATION.
2. LIME, FERTILIZE, SEED AND MULCH AREA TO BE JUTE NETTED.
3. BURY UPHILL AND UPSTREAM EDGE OF JUTE NETTING.
4. DIVERSIONS WILL BE INSTALLED ABOVE JUTE NETTING ON SLOPED BANKS.
5. ON SHORT BANKS (LESS THAN 10 FT.), JUTE NETTING CAN BE PERPENDICULAR TO BANK SLOPE.
6. INSTALL ON STEEP SLOPES OR ON THE BANKS OF FLOWING STREAMS, OR IN UPLAND AREAS.
7. DO NOT USE METAL STAPLES OR STAKES IN PASTURE OR AGRICULTURAL AREAS.

NOT TO SCALE

| | | |
|---|---|---|
| MILLENNIUM PIPELINE℠<br>ENVIRONMENTAL CONSTRUCTION STANDARDS | EROSION CONTROL BLANKET | FIGURE 14 |

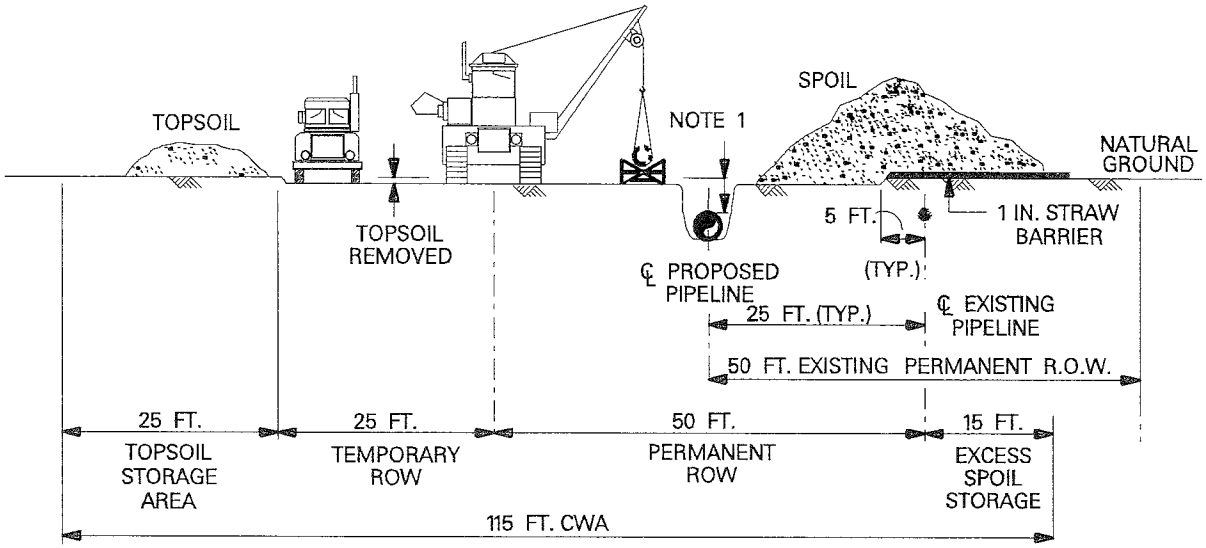


ADJACENT TO EXISTING PIPELINE WITH GRASS GROUND COVER

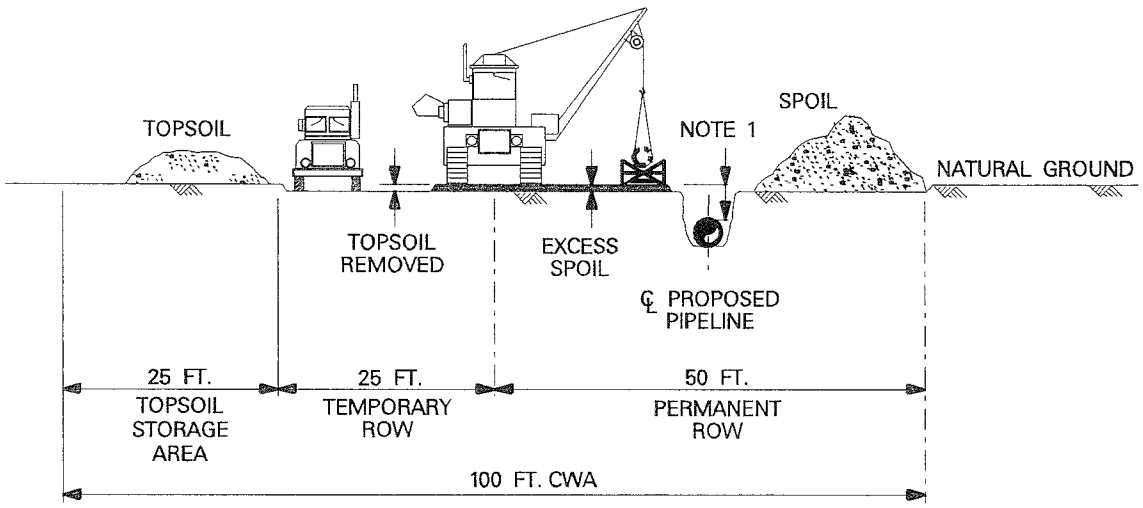


LIFT & LAY NEW PIPELINE OR PLOWED FIELD

NOTE:
1. DEPTH OF COVER IN CROPLAND TO BE 4 FT. OR 1 FT. BELOW EXISTING FIELD TILE, WHICH EVER IS GREATER. (FIGURE 17)
2. OTHER CONFIGURATIONS OF TOPSOIL AND SUBSOIL ARE ACCEPTABLE PROVIDED THEY ARE KEPT SEPARATE.
3. UP TO 16 INCHES OF TOPSOIL REMOVED.
4. TOPSOIL AND SUBSOIL PILES WILL BE ADEQUATELY PROTECTED FROM EROSION AND SEDIMENTATION BY USE OF SEDIMENT FILTER DEVICES OR STRAW MULCH.
5. A 1 IN. THICK STRAW VISUAL BARRIER MUST BE INSTALLED PRIOR TO SUBSOIL SPOILING OVER TOPSOIL.

NOT TO SCALE

MILLENNIUM PIPELINE℠
ENVIRONMENTAL CONSTRUCTION STANDARDS

TYPICAL TOPSOIL CONSERVATION IN AGRICULTURAL LAND

FIGURE 15

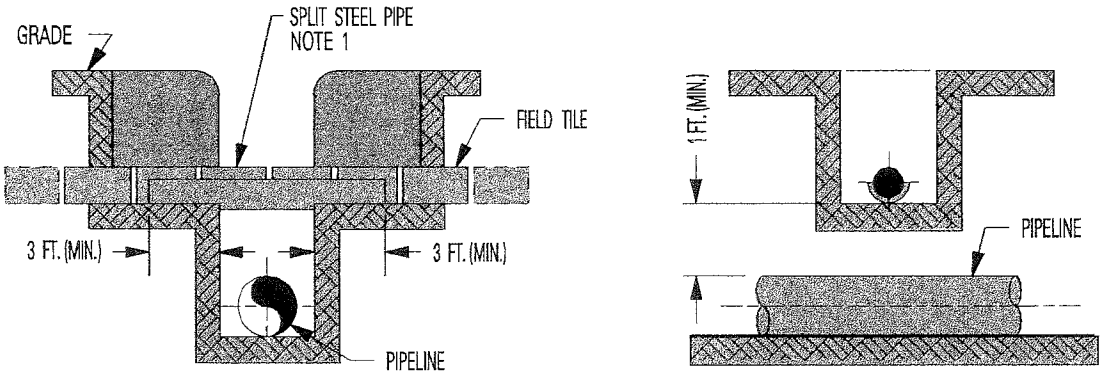


METHOD 1

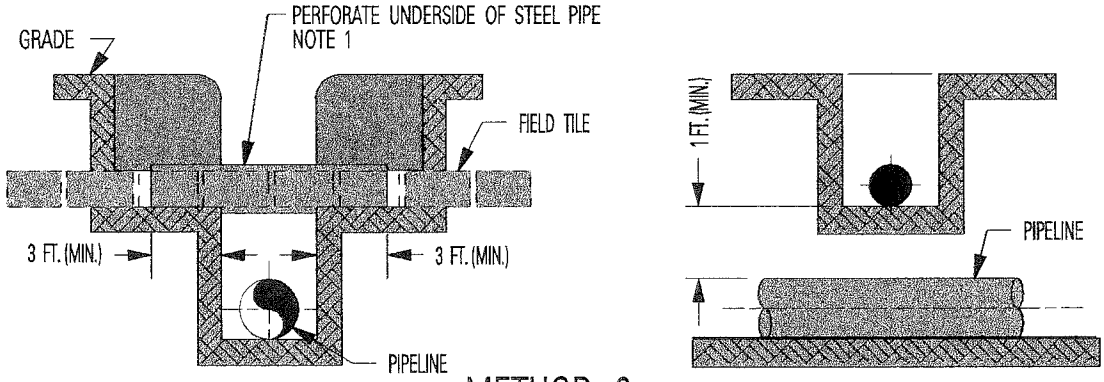


METHOD 2

NOTES:
1. STEEL CARRIER PIPE TO HAVE INSIDE DIAMETER AS NEAR AS POSSIBLE TO THE OUTSIDE DIAMETER OF THE FIELD TILE.
2. MAINTAIN ORIGINAL FLOW LINE OF FIELD TILE IN BOTH METHODS.
3. REPLACEMENT FIELD TILE WILL NOT BE FILTER COVERED UNLESS NATURAL RESOURCES CONSERVATION SERVICE AND LANDOWNER SPECIFY.

NOT TO SCALE

| | | |
|---|---|---|
| MILLENNIUM PIPELINE℠<br>ENVIRONMENTAL CONSTRUCTION STANDARDS | FIELD TILE REPLACEMENT METHODS | FIGURE 16 |

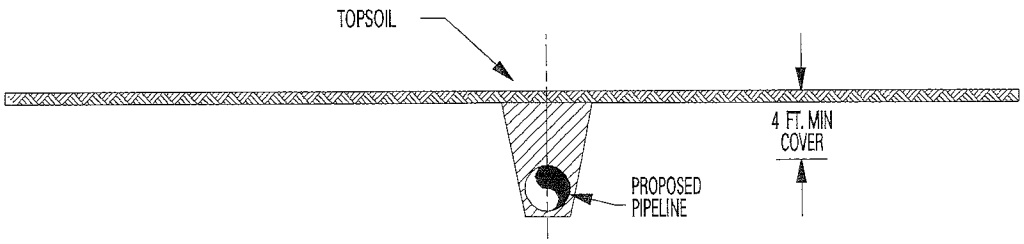


WITHOUT DRAIN TILE

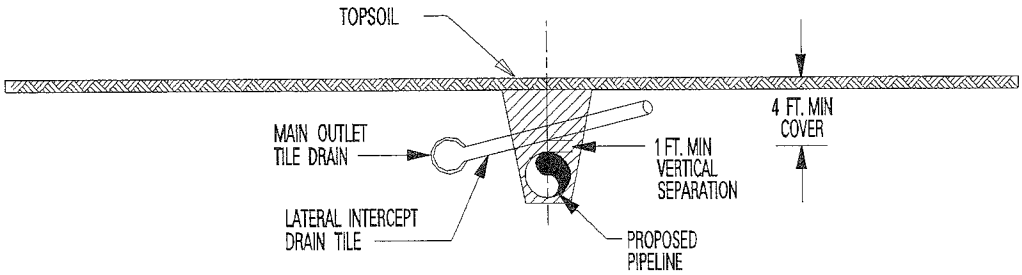


WITH DRAIN TILE

NOTES: 1. DISTURBED FIELD TILE TO BE REPAIRED IN ACCORDANCE WITH FIGURE 16

NOT TO SCALE

| | | |
|---|---|---|
| MILLENNIUM PIPELINE℠<br>ENVIRONMENTAL CONSTRUCTION STANDARDS | TYPICAL AGRICULTURAL LAND CROSS - SECTION | FIGURE 17 |

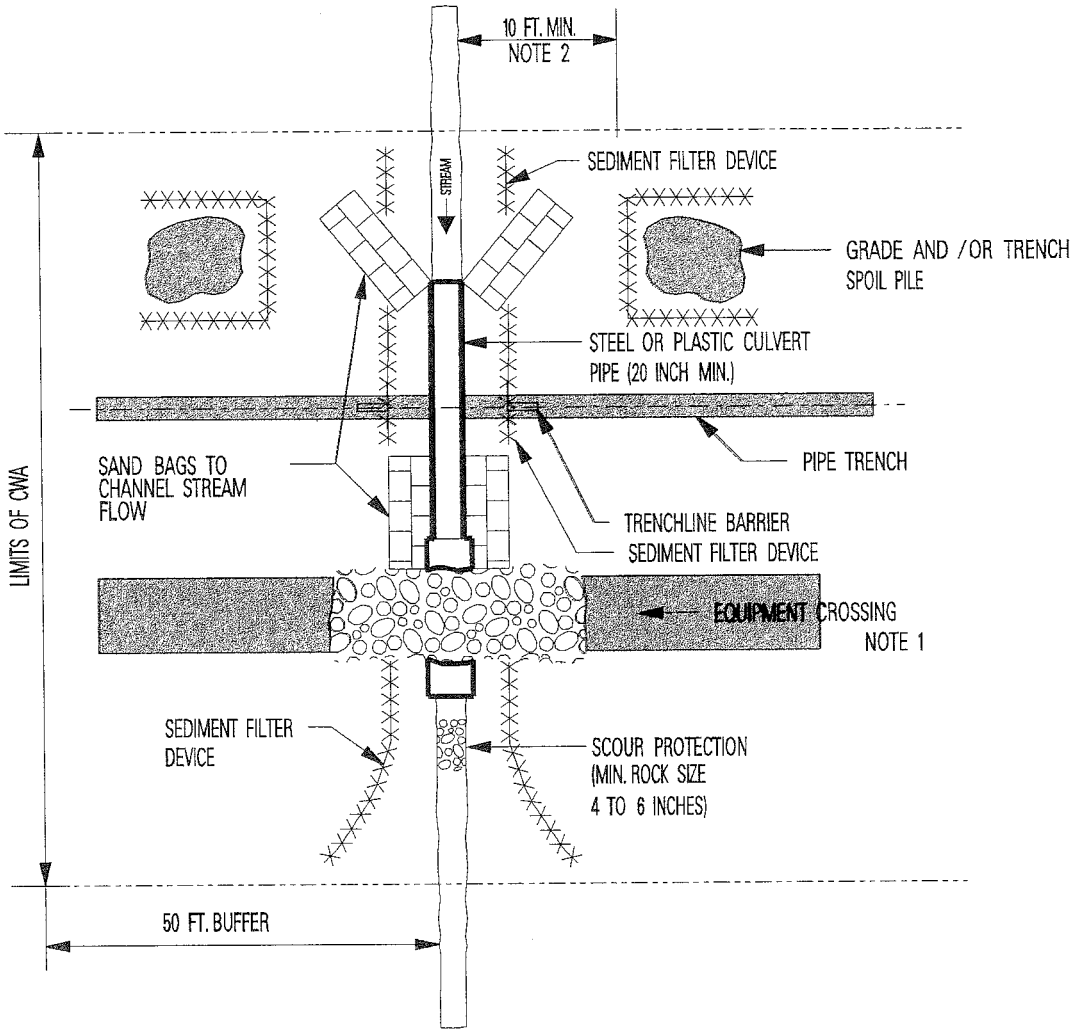


NOTES:

1. EQUIPMENT CROSSINGS ARE TO BE PREPARED AS ILLUSTRATED IN FIGURES 22 & 23.
2. GRADE AND TRENCH SPOIL WILL BE STOCKPILED AT LEAST 10 FEET FROM THE WATER'S EDGE, TOPOGRAPHY PERMITTING.
3. INSTALL FLUME PIPE AFTER BLASTING, BUT BEFORE TRENCHING.
4. USE SAND BAG OR SAND BAG AND PLASTIC SHEETING DIVERSION STRUCTURE, OR EQUIVALENT.
5. PROPERLY ALIGN FLUME PIPE.
6. DO NOT REMOVE FLUME PIPE DURING TRENCHING, PIPELAYING, OR BACKFILLING ACTIVITIES.
7. REMOVE ALL FLUME PIPES AND DAMS THAT ARE NOT ALSO PART OF THE EQUIPMENT BRIDGE AFTER FINAL CLEANUP BUT BEFORE PERMANENT SEEDING.

NOT TO SCALE

| | | |
|---|---|---|
| MILLENNIUM PIPELINE SM<br>ENVIRONMENTAL CONSTRUCTION STANDARDS | TYPICAL<br>STREAM CROSSING<br>DRY-DITCH<br>(FLUME) | FIGURE 18 |

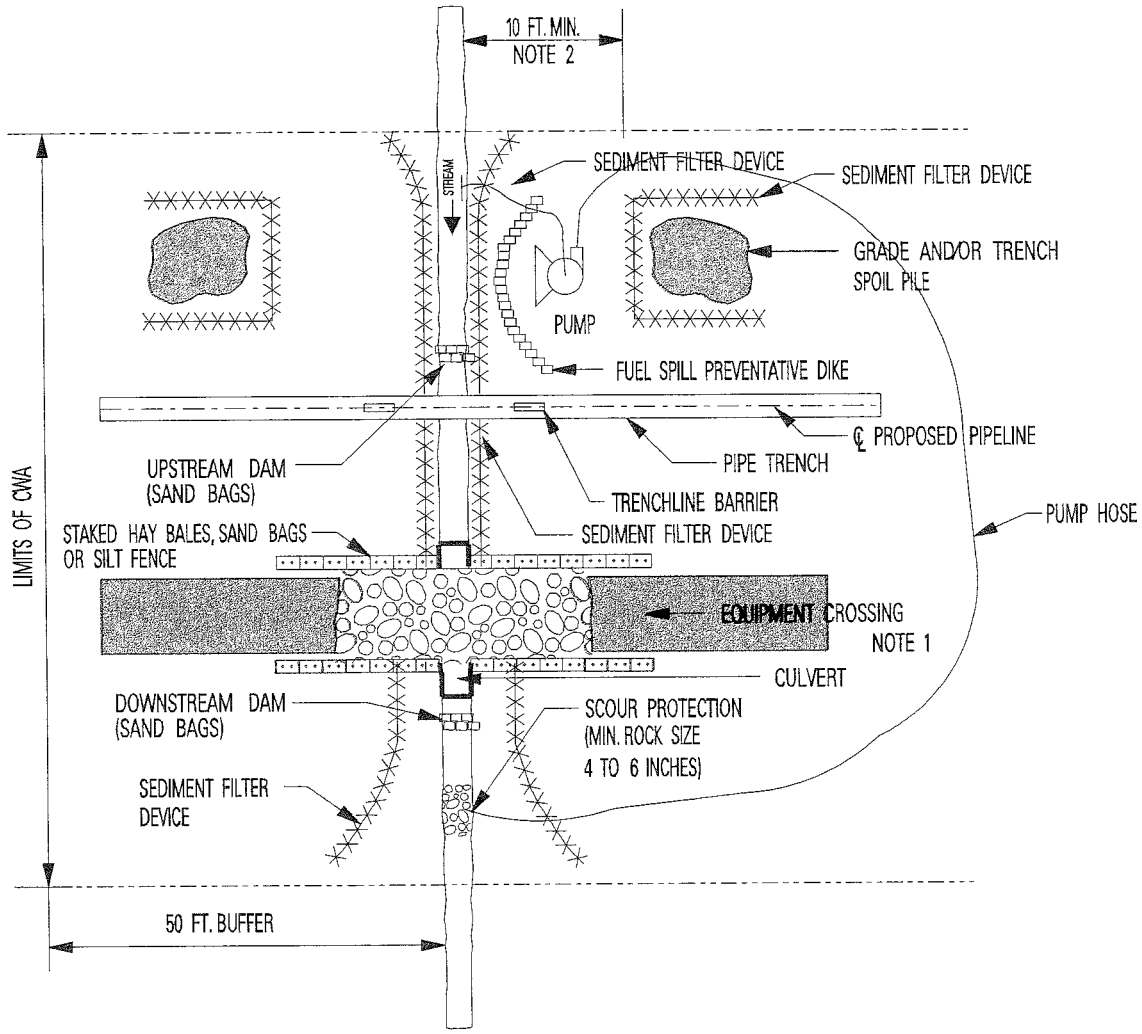


NOTES:

1. EQUIPMENT CROSSINGS ARE TO BE PREPARED AS ILLUSTRATED IN FIGURES 22 & 23.
2. GRADE AND TRENCH SPOIL WILL BE STOCKPILED AT LEAST 10 FEET FROM THE WATER'S EDGE, TOPOGRAPHY PERMITTING.
3. SET UP PUMP AND HOSE AS SHOWN, OR USE OTHER PRACTICAL ALTERNATIVES. PUMP SHOULD HAVE TWICE THE PUMPING CAPACITY OF ANTICIPATED FLOW.
4. CONTRACTOR TO ENSURE A SUFFICIENT NUMBER OF ACTIVE AND BACKUP PUMPS TO MAINTAIN THE CAPACITY OF THE STREAMFLOW AT ALL TIMES DURING INSTALLATION.
5. ALL INTAKE HOSES WILL BE SCREENED.
6. DISMANTLE DOWNSTREAM DAM, THEN UPSTREAM DAM. KEEP PUMP RUNNING TO MAINTAIN STREAM FLOW.

NOT TO SCALE

| | | |
|---|---|---|
| MILLENNIUM PIPELINE℠<br>ENVIRONMENTAL CONSTRUCTION STANDARDS | TYPICAL<br>STREAM CROSSING<br>DRY-DITCH<br>(DAM AND PUMP) | FIGURE 19 |

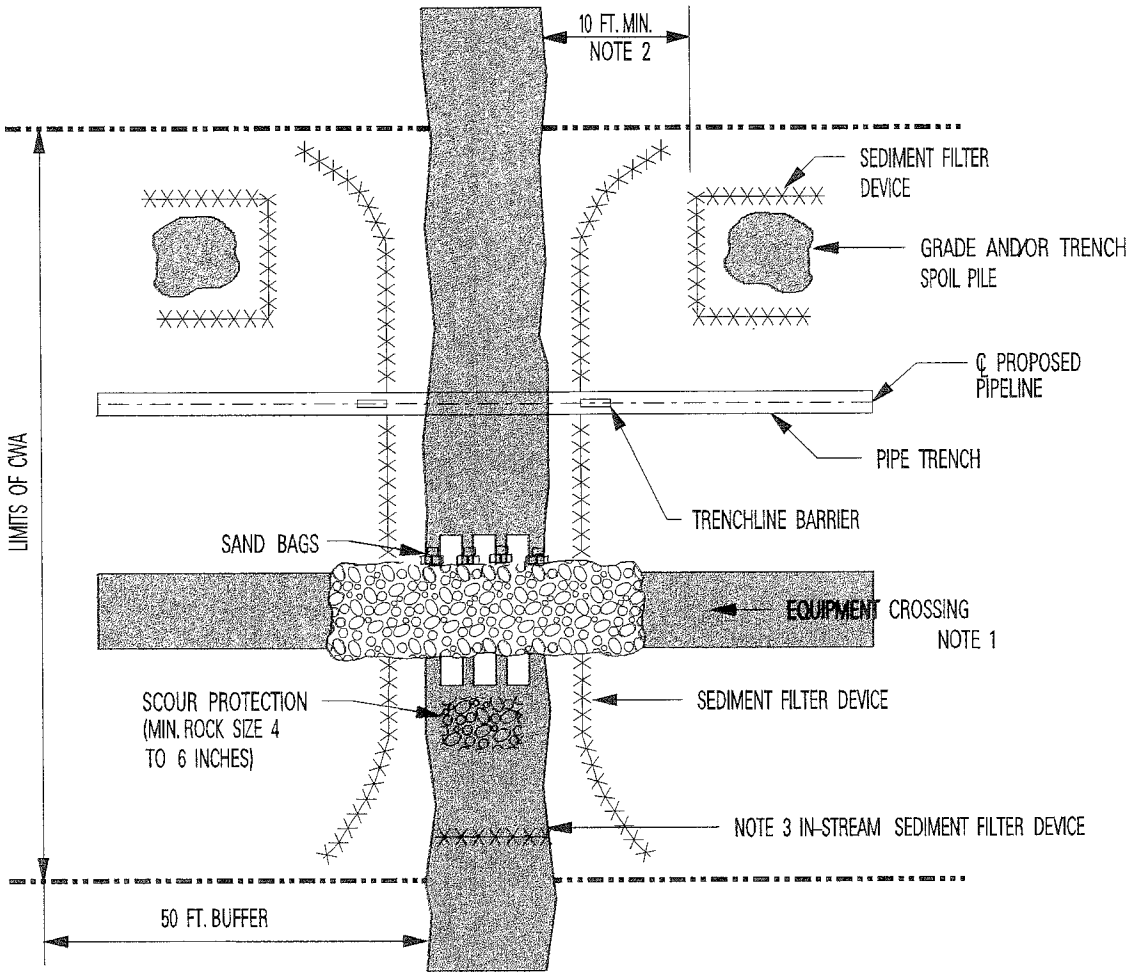


NOTES:
1. EQUIPMENT CROSSINGS ARE TO BE PREPARED AS ILLUSTRATED IN FIGURES 22 & 23.
2. GRADE AND TRENCH SPOIL WILL BE STOCKPILED AT LEAST 10 FEET FROM THE WATERS' EDGE, TOPOGRAPHY PERMITTING.
3. IN HIGH QUALITY STREAMS, INSTALL IN-STREAM SEDIMENT FILTER DEVICE 40 FT. AND 60 FT. DOWNSTREAM IN ACCORDANCE WITH MANUFACTURER'S INSTRUCTIONS.

NOT TO SCALE

| | | |
|---|---|---|
| MILLENNIUM PIPELINE℠<br>ENVIRONMENTAL CONSTRUCTION STANDARDS | TYPICAL<br>STREAM CROSSING<br>WET-DITCH | FIGURE 20 |

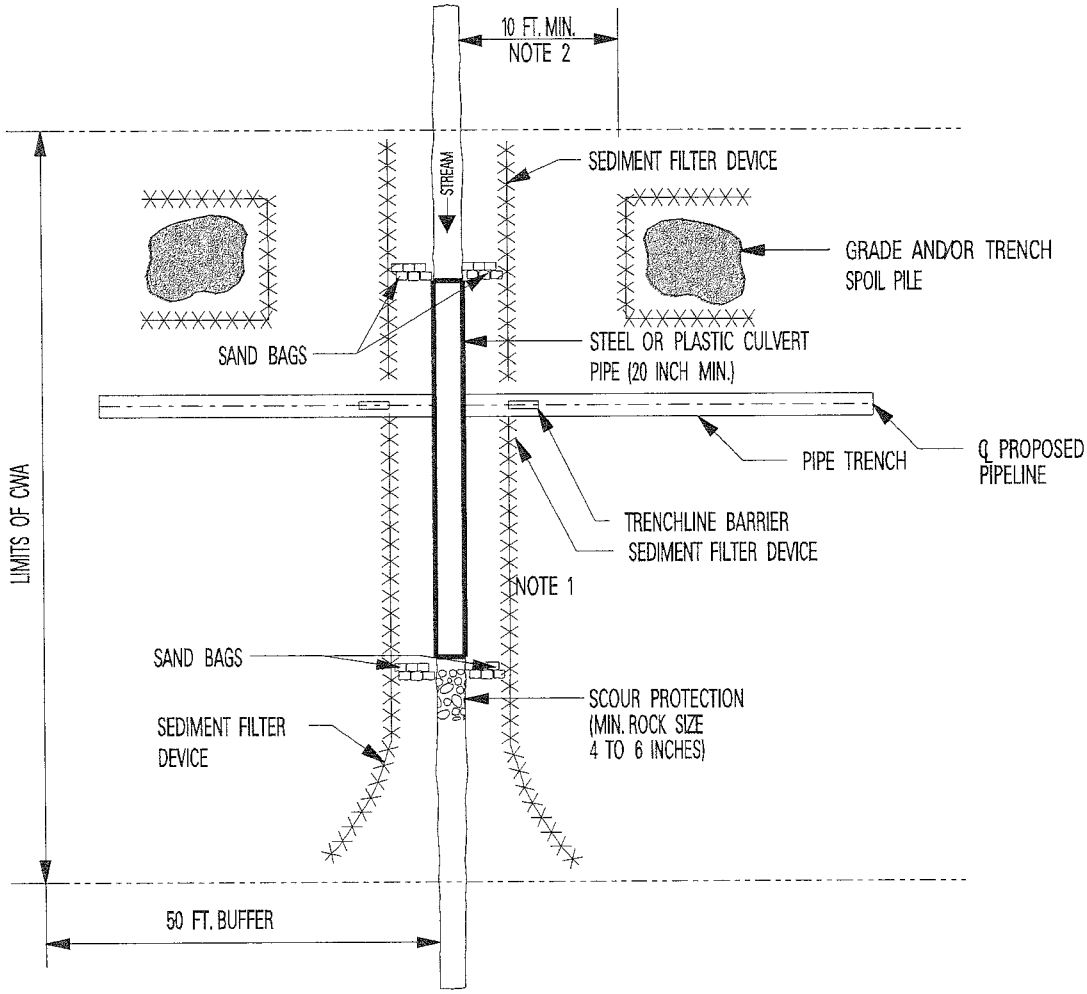


NOTES:
1. EQUIPMENT CROSSINGS, IF INSTALLED, ARE TO BE PREPARED AS ILLUSTRATED IN FIGURES 22 & 23.
2. GRADE AND TRENCH SPOIL WILL BE STOCKPILED AT LEAST 10 FEET FROM THE WATER'S EDGE, TOPOGRAPHY PERMITTING.
3. INSTALL CULVERT IF STREAM CROSSING IS NOT PROMPTLY INSTALLED.

NOT TO SCALE

| | | |
|---|---|---|
| MILLENNIUM PIPELINE℠<br>ENVIRONMENTAL CONSTRUCTION STANDARDS | TYPICAL STREAM CROSSING INTERMITTENT STREAMS | FIGURE 21 |

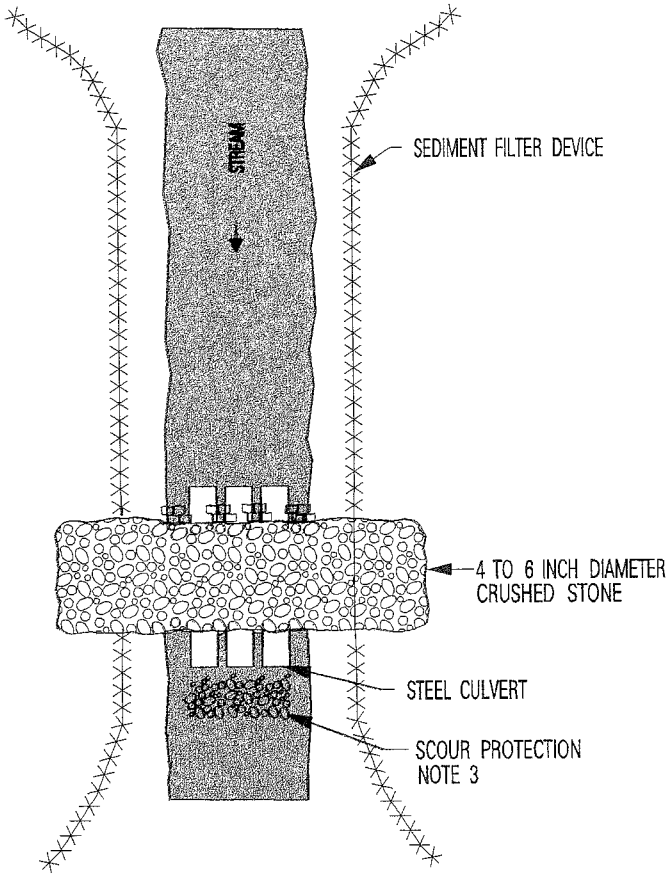


NOTES:
1. MINIMUM CONTOURING OF THE BOTTOM NECESSARY TO LAY THE CULVERTS LEVEL IS PERMISSIBLE.
2. USE AS MANY CULVERTS AS REQUIRED TO SPAN ENTIRE STREAM BED.
3. STONES WILL BE PLACED AT THE OUTLET OF ALL CULVERTS TO PROVIDE SCOUR PROTECTION IN THE EXISTING CHANNELS. MINIMUM ROCK SIZE: 4 TO 6 INCHES.
4. MINIMUM CULVERT DIAMETER 20 INCHES .

NOT TO SCALE

| | | |
|---|---|---|
| MILLENNIUM PIPELINE SM<br>ENVIRONMENTAL CONSTRUCTION STANDARDS | TEMPORARY EQUIPMENT CROSSING CULVERT AND STONE | FIGURE 22 |

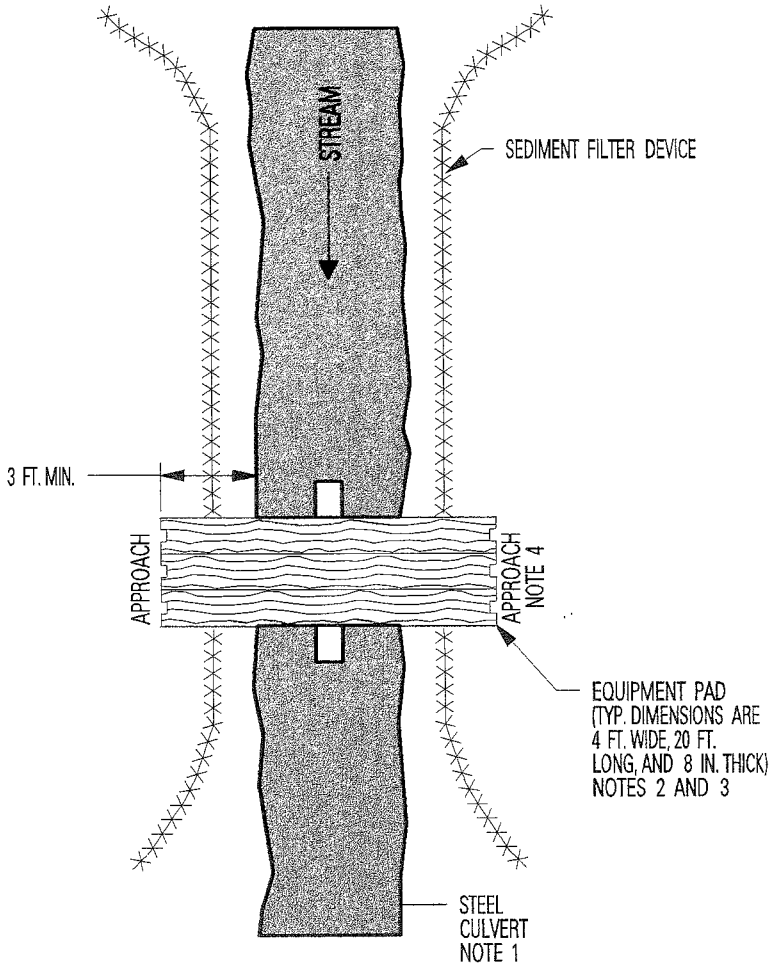


NOTES:

1. CULVERT PIPE UTILIZED IF ADDITIONAL SUPPORT IS REQUIRED.
2. ADDITIONAL PADS CAN BE PUT SIDE BY SIDE IF EXTRA WIDTH IS REQUIRED.
3. EQUIPMENT PAD TYPICALLY CONSTRUCTED OF HARD-WOOD; MUST ACCOMMODATE THE LARGEST EQUIPMENT USED.
4. RAMP APPROACHES CAN EITHER BE GRADED OR DUG INTO GROUND. IF NECESSARY, CRUSHED STONE WILL BE USED TO RAMP UP TO THE EQUIPMENT PADS.
5. MINIMUM CULVERT DIAMETER 20 INCHES.
6. MAINTAIN PADS SO AS NOT TO ALLOW MUD TO ENTER THE STREAM

NOT TO SCALE

| | | |
|---|---|---|
| MILLENNIUM PIPELINE℠<br>ENVIRONMENTAL CONSTRUCTION STANDARDS | TEMPORARY EQUIPMENT CROSSING EQUIPMENT PADS | FIGURE 23 |

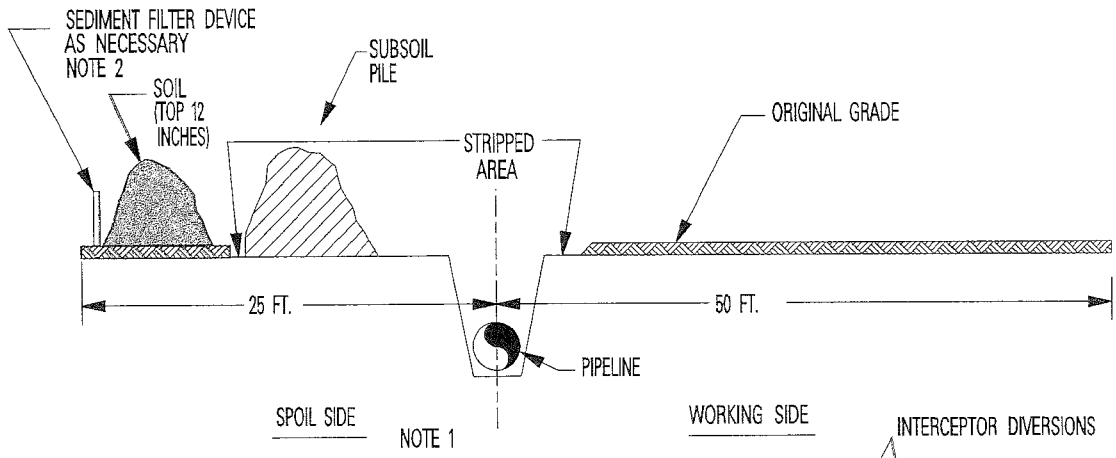


SIDE VIEW

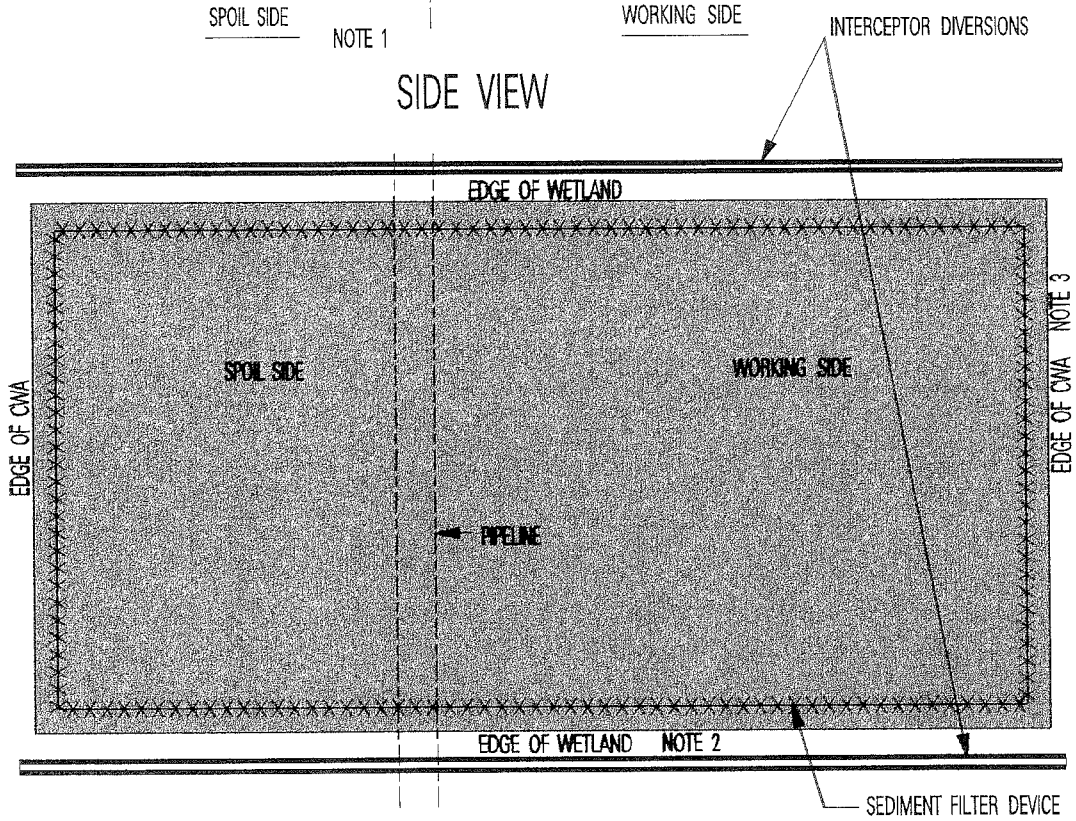


PLAN VIEW

NOTES:
1. IN WETLAND AREAS WHICH CONTAIN NO STANDING WATER OR SATURATED SOILS, SOIL (TOP 12 INCHES) AND SUB-SOIL WILL BE STOCKPILED SEPARATELY WITHIN THE WETLAND CWA.
2. A SEDIMENT FILTER DEVICE WILL BE PLACED ACROSS THE CWA AT THE WETLAND'S EDGE.
3. A SEDIMENT FILTER DEVICE WILL BE PLACED AT THE EDGE OF THE CWA AND AROUND SOIL AND SUBSOIL PILES AS NECESSARY.

NOT TO SCALE

MILLENNIUM PIPELINE℠

ENVIRONMENTAL CONSTRUCTION STANDARDS

TYPICAL WETLAND CROSSING

FIGURE 24

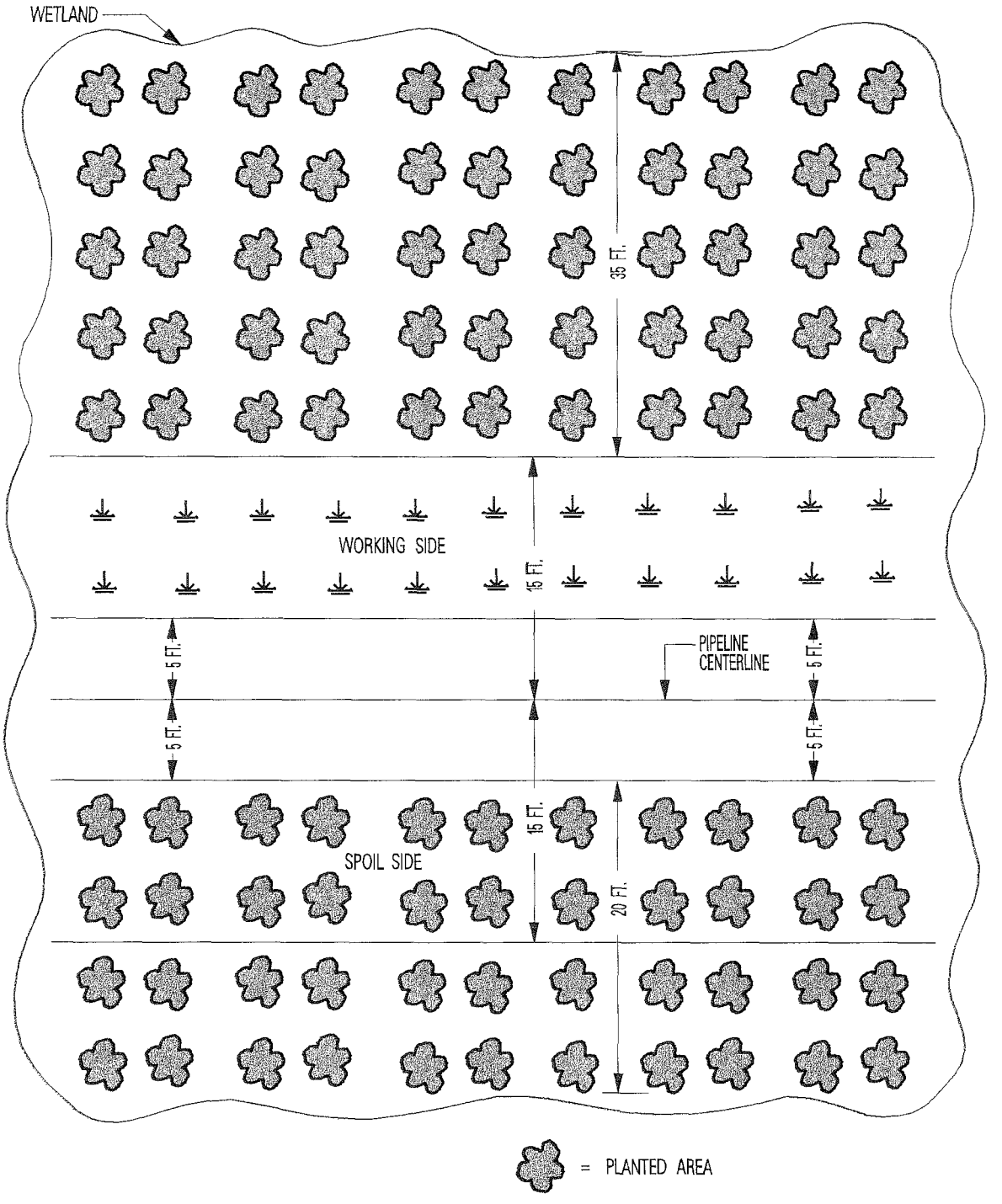


NOTES:
1. WHERE STUMPS HAVE BEEN REMOVED, WOODY VEGETATION ADAPTED TO WETLANDS WILL BE REPLANTED, EXCEPT WITHIN 5 FEET OF THE PIPELINE CENTERLINE OR APPURTENANCES.
2. PLANT NATIVE TREES TO ULTIMATELY RESTORE THE CWA, EXCEPT FOR MAINTAINED PORTION OF THE PERMANENT ROW, TO ITS PRE-CONSTRUCTION STATE.

NOT TO SCALE

| | | |
|---|---|---|
| MILLENNIUM PIPELINE℠<br>ENVIRONMENTAL CONSTRUCTION STANDARDS | TYPICAL FORESTED WETLAND PLANTING | FIGURE 25 |

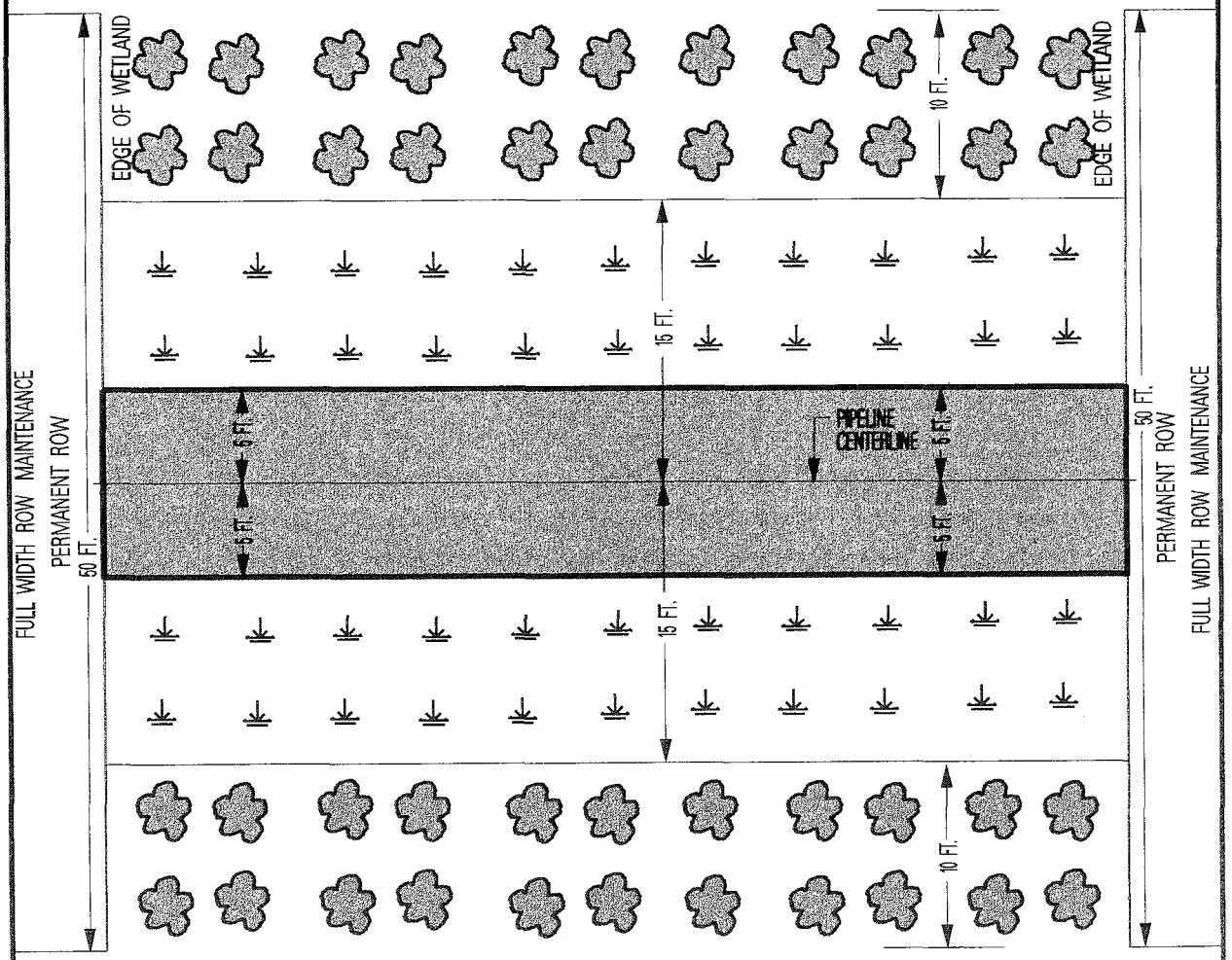


= HERBACEOUS PLANTS

= NON-MAINTAINED AREA

= SHRUB & HERBACEOUS PLANTS

NOTES:

1. FULL WIDTH ROW MAINTENANCE PRACTICES IN WETLANDS ARE PROHIBITED.
2. A CORRIDOR UP TO 10 FEET WIDE CENTERED ON THE PIPELINE OR APPURTENANCES MAY BE MAINTAINED IN A HERBACEOUS STATE.
3. TREES LOCATED WITHIN 15 FEET OF THE PIPELINE AND GREATER THAN 15 FEET TALL MAY BE SELECTIVELY CUT AND REMOVED FROM THE ROW. (SHRUB AND HERBACEOUS PLANTS)
4. STUMPS AND ROOTS WILL BE LEFT IN PLACE.

NOT TO SCALE

MILLENNIUM PIPELINE℠

ENVIRONMENTAL CONSTRUCTION STANDARDS

ROW MAINTENANCE WETLANDS

FIGURE 26

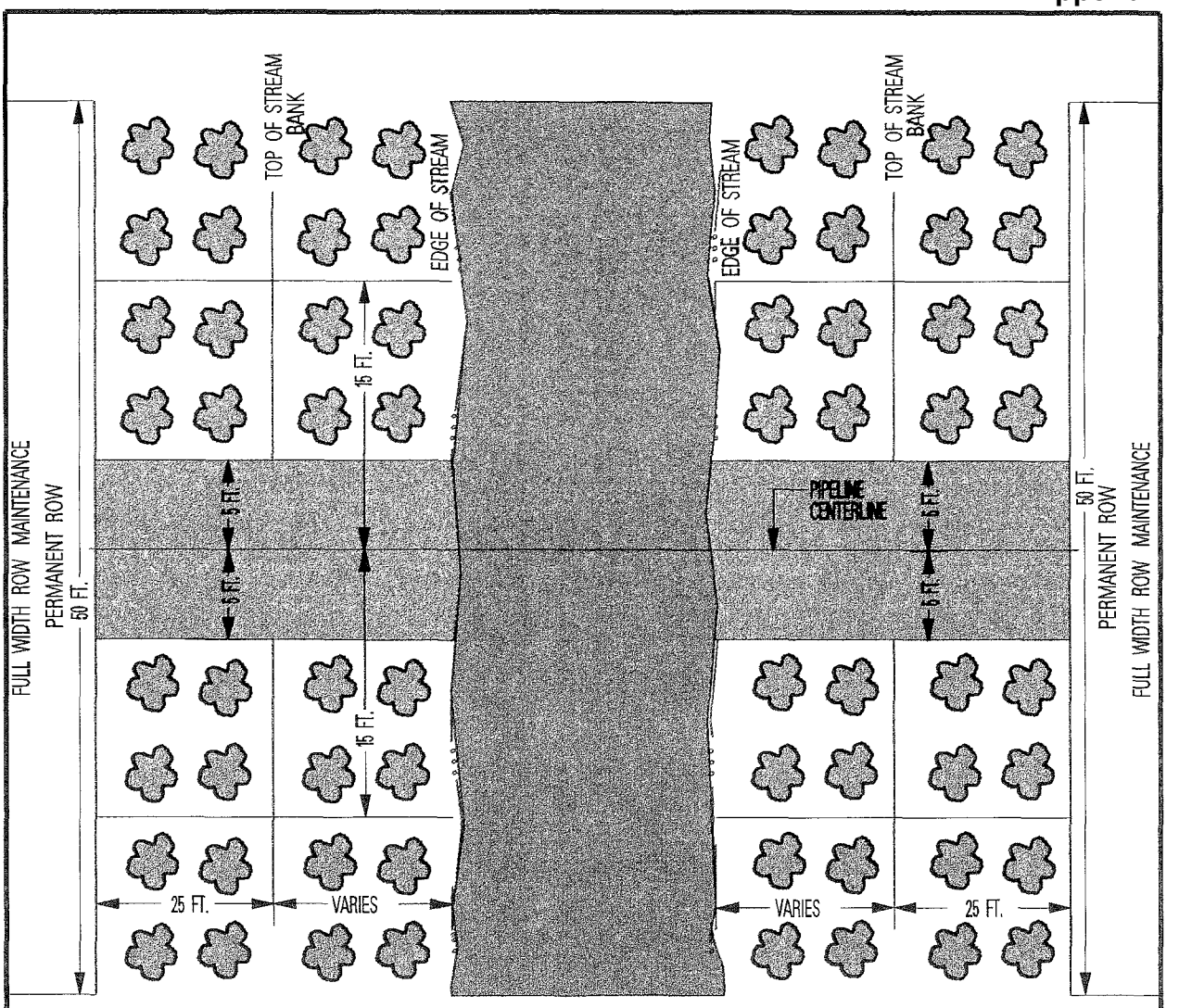


= TREE

NOTES:

1. FULL WIDTH ROW MAINTENANCE PRACTICES WITHIN 25 FEET OF WATERBODY'S MEAN HIGH WATER MARK ARE PROHIBITED.
2. A CORRIDOR UP TO 10 FEET WIDE CENTERED ON THE PIPELINE OR APPURTENANCES MAY BE MAINTAINED IN A HERBACEOUS STATE.
3. TREES LOCATED WITHIN 15 FEET OF THE PIPELINE AND GREATER THAN 15 FEET TALL MAY BE SELECTIVELY CUT AND REMOVED FROM THE ROW.
4. STUMPS AND ROOTS WILL BE LEFT IN PLACE.

NOT TO SCALE

| | | |
|---|---|---|
| MILLENNIUM PIPELINE℠<br>ENVIRONMENTAL CONSTRUCTION STANDARDS | ROW MAINTENANCE<br>PERENNIAL STREAMS | FIGURE 27 |

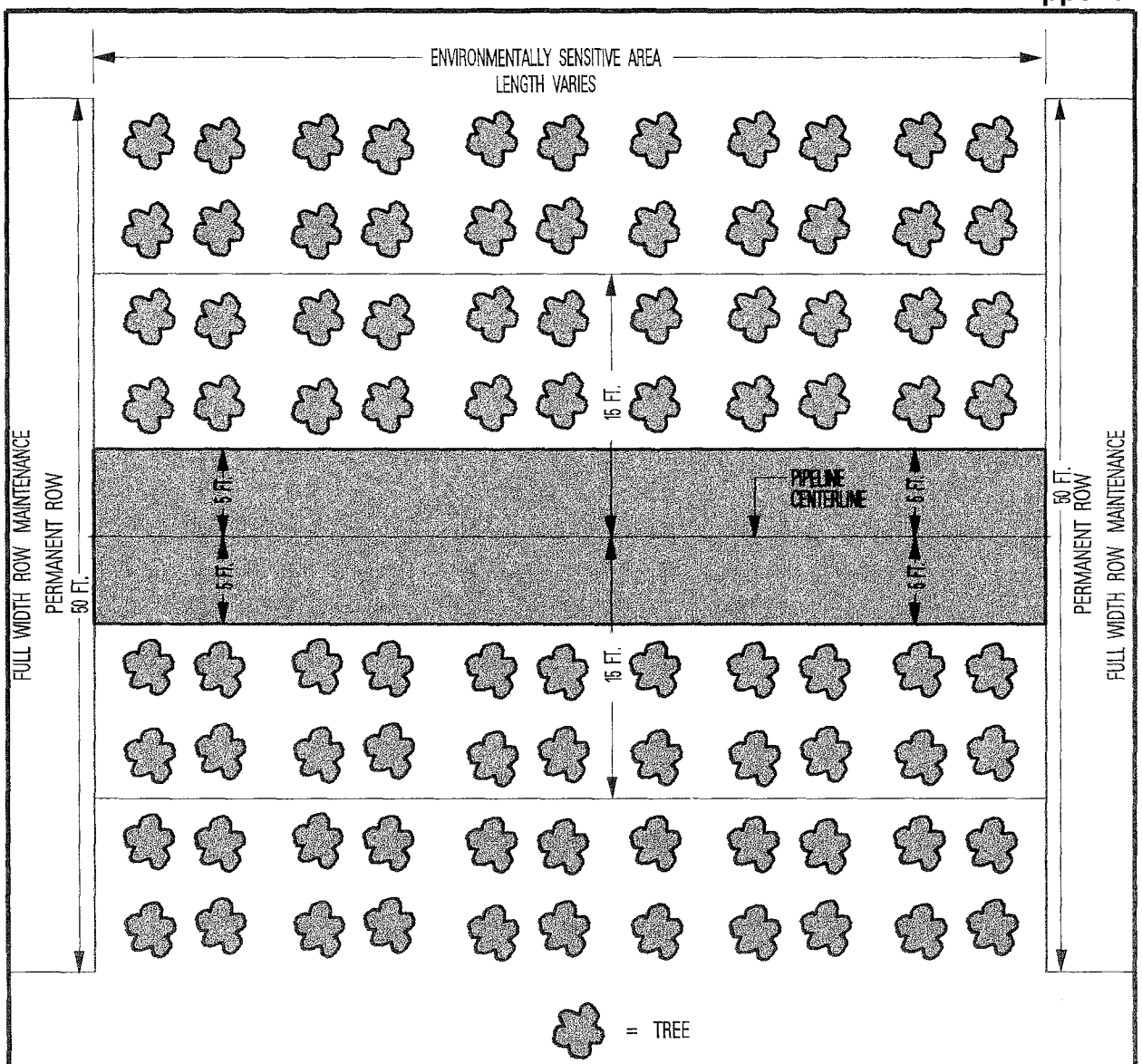


NOTES:

1. FULL WIDTH ROW MAINTENANCE PRACTICES IN ENVIRONMENTALLY SENSITIVE AREAS ARE PROHIBITED.
2. A CORRIDOR UP TO 10 FEET WIDE CENTERED ON THE PIPELINE OR APPURTENANCES MAY BE MAINTAINED IN A HERBACEOUS STATE.
3. TREES LOCATED WITHIN 15 FEET OF THE PIPELINE AND GREATER THAN 15 FEET TALL MAY BE SELECTIVELY CUT AND REMOVED FROM THE ROW.
4. STUMPS AND ROOTS WILL BE LEFT IN PLACE.

NOT TO SCALE

| | | |
|---|---|---|
| MILLENNIUM PIPELINE℠<br>ENVIRONMENTAL CONSTRUCTION STANDARDS | ROW MAINTENANCE ENVIRONMENTALLY SENSITIVE AREAS | FIGURE 28 |

# HORIZONTAL DIRECTIONAL DRILL CONTINGENCY PLAN

## RAMAPO RIVER VALLEY CROSSING

## 1. HDD CROSSING PLAN AND FRAC-OUT CONTINGENCY

Horizontal Directional Drilling (HDD) is a construction method used to install pipelines beneath water bodies, wetlands, and other naturally occurring features where conventional construction techniques would result in unacceptable resource impacts. Three main steps are followed during HDD: drilling the pilot hole; opening the pilot hole with by reaming; and the pullback of a pre-fabricated steel pipe string.

The Ramapo River provides an obstacle to conventional pipeline construction due to its importance as a fishery resource. To address these concerns, Columbia proposes to use the HDD installation method to install a 30-inch diameter natural gas pipeline under the Ramapo River and the transportation arteries on each side of the river.

The planned HDD installation will extend from the west beneath NY State Route (NY) 17, Metro-North Railroad, the Ramapo River and, finally, to the east side of Interstate 87. The drill rig's proposed location will be on the west side of NY 17 near an abandoned gravel mining operation. All temporary work areas necessary to complete the drilled crossing will be sited a minimum of 50 feet from adjacent water bodies and wetlands. Vehicles and equipment associated with drilling operations will access the drill site using existing access roads into to the drill site.

It will be necessary to grade portions of the proposed drill location in order to level the site and to accommodate set up of the drill rig. The appropriate erosion control measures will be installed around the perimeter of the drill site and will be maintained and inspected in accordance with the Columbia's ECS. The drill rig will be assembled on site and remain stationary during the entire drilling, reaming, and pullback process.

Drilling fluids will be mixed and stored aboveground, and will be contained in portable steel tanks or in shallow earthen pits adjacent to the entry and exit points. Geotechnical investigation was previously conducted on a proposed HDD crossing location whose entry site was approximately 1,000 feet north of the currently-proposed entry site. The previous site was abandoned due to objections of the new landowner. Geotechnical investigations will be conducted for the new proposed location on the entry site by sinking at least two bore holes, one on either side of the proposed directional drill profile, to a depth deeper than that planned for the drill profile.

Columbia will employ specialists at HDD installation with a proven record of successful completion for projects of similar length and complexity. One Environmental Inspector will be assigned full-time to the HDD and will assist in monitoring for drilling fluid seepage. The path of the drilled pilot hole will be continually monitored aboveground for any inadvertent return of the drilling fluid to the surface.

The HDD will include drilling the pilot hole to establish the drill arc. Successive reaming passes will be done to enlarge the annulus until it can accommodate pull-back of the 30-inch diameter pipe string assembled on the east side of the crossing in an existing clearing to the east of Interstate 87.

Unlike shallow directional drilling methods used in the telecommunications industry, horizontal directional drilling installations for pipelines require deep cover under the water body of at least 20 feet under the deepest point of the water body. To attain this kind of cover over the pipeline, the total vertical drilled depth will be nearly 100 feet. Shallow "walk along" survey equipment as used by telecommunications crossings are only sensitive to depths of approximately 15 feet. For the depths reached with this installation, downhole survey equipment will provide continuous query real-time survey data that is accurate to within a fraction of an inch of the actual location of the drill bit. The additional depth of cover attained also helps to avoid mud fractures, fluid seepage, and inadvertent surface releases.

## 1.1. INADVERTANT DRILLING FLUID SURFACE DISCHARGE ("FRAC-OUT")

Drilling fluid seepage can be easily detected and contained at the upland entry and exit locations. In these areas, fractures may occur due to the shallow depth of the drilling assembly and the pressure of the drilling fluids necessary to remove cuttings from the annulus of the drilled pilot hole. If inadvertent returns are detected at these locations, they will be isolated and contained. Drilling fluid pressures will be kept low near surface in order to reduce the possibility of seeps. As drilling proceeds and depth increases, chances for fractures and seepage to the surface will lessen. At its deepest point, the drill will pass nearly 50 feet or more under the deepest point of the river. The drill path will slowly gain elevation to finally arrive at the exit point. Once the pilot hole is completed, no additional fractures are expected, because after punch out, the drilling fluid has a path open to atmosphere at both ends of the drilled pilot profile.

If upland seepage of drilling fluid is detected at the punch out, immediate corrective action will be taken by stopping the mud pumps and using hand tools such as brooms and shovels to contain and clean up the seepage. It may be necessary to build a temporary earthen berm around the punch-out area. Sandbags, hay bales, or silt fence may also be used as part of the berm. Any drilling fluid seepage detected at or near the entry and exit points will be contained and isolated. If the seepage continues, more aggressive action will be taken, involving cleanup and removal of the fluids by use of powered ditching and earth-moving equipment, powered pumps, and/or vacuum trucks.

If hydraulic communication exists in the subsurface strata between the drill annulus and the upper unconfined aquifer, there is always some chance of inadvertent returns on the portion of the drill under the deepest portion of the Ramapo River. If returns are detected in this area, the drilling fluid pressure will be reduced to the minimal amount necessary to continue pilot-hole drilling – but drilling will continue. The drilling fluid slurry used will be a solution of inert clay (bentonite) and water. It will be pH neutral, contain no other additives and only mixed with the returns of the native soil found in the drill path. The viscosity of the drilling fluid would be

increased to reduce its flow capacity. If these measures are not effective in stemming the surface discharge, the location around the seep will need to be bermed to contain the escaping drilling fluids. Vacuum trucks would then remove the drilling fluids and return them back to the rig. Access into the river bottom will be via access road ARHDD 003.

At exit, the pilot hole becomes open to the atmosphere on both ends allowing an equalization of fluid levels in the drilled hole. Any inadvertent seepage or fractures experienced up to that point, should be adequately relieved and not expected to continue to seep or be of any further problem.

After a successful pilot hole is drilled, it will be necessary to open the pilot hole to a larger diameter by reaming. Based on the experience gained during pilot-hole drilling, it will be determined what final reaming diameter will be adequate to accommodate the pullback of the 30-inch diameter pipeline. An open hole as large as 42 inches in diameter may be necessary. The reamer will either be pushed from the drill rig while pulling on the drill pipe from the opposite bank with track equipment, or the reamer will be pulled from the opposite bank with drill pipe by the drill rig.

During reaming the area around the drill path will once again be monitored for inadvertent fluid returns, although chances of additional releases are reduced, as the reamed hole is larger in diameter than the pilot hole and it is open to the atmosphere on both ends. If any returns are detected, cleanup will begin immediately.

Following successful pullback of the carrier pipe, the drill rig and other components of the rig spread will be disassembled and removed. Cleanup and site restoration will take approximately two to three weeks. Total project time elapsed for the HDD installation is anticipated to be 10 to 12 weeks.

## 2. CONVENTIONAL CROSSING ALTERNATIVE

In the event that the proposed HDD crossing is not successful, an alternative crossing procedure will be implemented using conventional pipeline construction methods. This procedure would involve conventional horizontal bored crossings of NY 17, Metro-North Railroad and Interstate 87. The main channels of the Ramapo River would be installed using dry-ditch pipeline construction methods consistent with Columbia's ECS.

# Appendix E2

## Empire Connector Project

- **Empire Erosion and Sedimentation Control and Agricultural Mitigation Plan**
- **Empire Spill Prevention Control and Counter Measures**

# EMPIRE CONNECTOR PROJECT

## Erosion and Sediment Control &

## Agricultural Mitigation

## Plan

TABLE OF CONTENTS Page

1 INTRODUCTION 1

1.1 Plan Objectives 1
1.2 Format 1

2 SUPERVISION AND INSPECTION 2

2.1 Environmental Inspection 2
2.2 Responsibilities of Environmental Inspectors 2
2.3 Agricultural Inspection 3
2.4 Responsibilities/Qualifications of Agriculture Inspectors 4

3. PRECONSTRUCTION PLANNING 7

3.1 Construction Work Areas 7
3.1.1 ROW & Staging Areas 7
3.1.2 Access Roads 7
3.1.3 Pipe yards 7
3.1.4 Wetland/Waterbody Crossings 8
3.2 Agricultural Area Planning 8
3.2.1 Drain Tile and Irrigation Systems 8
3.2.2 Grazing Deferment 8
3.3 Disposal Planning 8
3.4 Agency Coordination 9
3.5 Stormwater Pollution Prevention Plan 9

4 CONSTRUCTION ACTIVITIES 10

4.1 Approved Areas of Disturbance 10
4.2 Residential Area Construction 10
4.3 Agricultural Area Construction 11
4.3.1 Topsoil Segregation 11
4.3.2 Drain Tiles 12
4.3.3 Irrigation 12
4.4 Equipment Crossings 12
4.5 Road Crossings and Access Points 13
4.6 Interim Stabilization 13
4.7 Temporary Slope Breakers 14
4.8 Sediment Barriers 14
4.9 Mulch 15
4.10 Trench Dewatering 15
4.11 Trench Breakers 17
4.12 Maintenance of Erosion Control Devices 17

5 WATERBODY CROSSINGS 18

5.1 Construction Restrictions 18
5.2 Stream Buffer Area 18

5.3 Maintenance of Stream Crossing Control Devices 18
5.4 Additional Work Space Areas 18
5.5 Spoil Pile Placement/Control 19
5.6 Waterbody Crossing Procedures 19
5.7 Pipeline Construction at Streams 19

6 WETLAND CROSSINGS 20

6.1 General Guidelines 20
6.1.1 Construction in Dry Wetlands 20
6.1.2 Construction in Saturated Wetlands 20
6.2 Standard Pipeline Construction 21
6.3 Equipment Pads 22
6.4 Clearing 22
6.5 Grading 22
6.6 Trenching 22
6.7 Lowering-in/Backfilling 23

7 RESTORATION 24

7.1 Cleanup 24
7.2 Permanent Slope Breakers 24
7.3 Permanent Restoration Measures 25
7.4 Wetland and Waterbody Crossing Restoration 25
7.4.1 Wetlands Crossings 25
7.4.2 Waterbody Crossings 26
7.5 Residential Areas Restoration 26
7.6 Agricultural Mitigation 26
7.6.1 Subsurface Drainage Systems 27

8 REVEGETATION 29

8.1 General 29
8.2 Revegetation Operations 29
8.3 Soil Additives 29
8.4 Seeding Requirements 29
8.5 Temporary Mixtures - October 1 through March 31 30
8.6 Permanent Mixtures - April 1 through September 30 30

9 POST CONSTRUCTION ACTIVITIES 31

9.1 Monitoring and Maintenance 31
9.2 Reporting 31
9.3 Off Road Vehicle Control 32

10 GENERAL PIPELINE CONSTRUCTION SEQUENCING 33

10.1 Pre-Construction 33
10.2 Staging Area 33
10.3 Handling of Hazardous Materials 33
10.4 Access Roads 34
10.5 Clearing 34

**10.6 Grading 34**
**10.7 Rock Entrances 34**
**10.8 Temporary Diversions 35**
**10.9 Ditching 35**
**10.10 Lowering In 35**
**10.11 Backfilling 36**
**10.12 Hydrostatic Testing 36**
**10.13 Restoration and Revegetation 37**

**11 REFERENCES 38**

**Attachment 1 – Soil Protection and Subsoil Decompaction Plan**
**Attachment 2 – Best Management Practices Drawings**
**Attachment 3 – Special Crop Productivity Monitoring Procedures**
**Attachment 4 – New York State Farmlands – Seeding, Fertilizing, and Lime Recommendations for Gas Pipeline Right-of-Way Restoration in Farmlands**

# 1 INTRODUCTION

## 1.1 Plan Objectives

The primary objective of this Erosion and Sedimentation Control & Agricultural Mitigation Plan (ESCAMP or "Plan") is to reduce potential impacts from construction and maintenance of the project and outline mitigation, monitoring and maintenance procedures.

This Plan describes basic environmental construction and agricultural mitigation techniques that Empire (or its contractors) will use to construct and maintain pipelines. Best Management Practices (BMPs) will be implemented throughout construction to protect the environment and to minimize potential effects to the pipeline project.

Empire may modify the ESCAMP prior to construction, to include any additional requirements recommended by Federal, State, or Local agencies during the process of issuing permits. This document will be included as part of the Contractor's construction specifications.

## 1.2 Format

The content of this Plan is derived from the Federal Energy Regulatory Commission's (FERC) Wetland and Waterbody Construction and Mitigation Procedure; Upland Erosion Control, Revegetation, and Maintenance Plan; and New York State Department of Agricultural and Markets Pipeline Construction Projects - Agricultural Mitigation Through the Stages of Pipeline Planning, Construction/Restoration and Follow Up Monitoring (Rev 11-97). Additional project specific input has been integrated from consultation with the New York State Department of Environmental Conservation, New York State Department of Agriculture and Markets, New York Farm Bureau, United States Fish & Wildlife Service, the United States Department of Agriculture, and County Soil & Water Conservation Districts.

This ESCAMP provides information regarding the project construction and restoration, including the following:

- Agricultural Mitigation, as described herein and provided in the attached Soil Protection and Subsoil Decompaction Plan (Attachment 1);
- Wetland/Waterbody Construction, Erosion and Sedimentation Controls as described herein and as detailed in attached Best Management Practices (BMP) drawings (Attachment 2);
- Stormwater Pollution Prevention project information; and
- Revegetation and Maintenance details.
- Reference information used to develop this Plan is identified in the Section 11. Supplemental information is provided in the project Spill Prevention, Control and Countermeasures (SPCC) document, Hydrostatic Test Plan, and Site Specific Residential Mitigation Plans (not included in this document).

# 2 SUPERVISION AND INSPECTION

## 2.1 Environmental Inspection

- At least one Environmental Inspector is required for each construction spread during construction or restoration. The number and experience of Environmental Inspectors assigned to each construction spread should be appropriate for the length of the construction spread and the number/significance of resources affected.
- Environmental Inspectors shall have peer status with all other activity inspectors.
- Environmental Inspectors shall have the authority to stop activities that violate the environmental conditions of the Certificate, State and Federal environmental conditions, or landowner requirements; and to order appropriate corrective action. Corrective actions (and their status) will be documented in daily forms and, at a minimum, maintained in project files for the duration of construction activities.

The Project's Environmental Manager will be the primary liaison between the Project and agency representatives. Environmental Inspectors may be directed by the Environmental Manager to coordinate with agency field staff during project inspection activities. Agencies will be notified of project activities in accordance with permit and certificate requirements or as required by law (e.g., spill of hazardous material to a water source). Additional notifications will be made on a case-by-case situation (e.g., requests for agency guidance or existing requirement variances).

## 2.2 Responsibilities of Environmental Inspectors

At a minimum, the Environmental Inspector(s) shall be responsible for:

- Ensuring compliance with the requirements of this Plan, FERC Procedures, the environmental conditions of the Certificate authorization, the mitigation measures proposed by the applicant (as approved and/or modified by the Certificate), other environmental permits and approvals, and environmental requirements in landowner easement agreements.
- Identifying, documenting, and overseeing corrective actions, as necessary to bring an activity back into compliance.
- Verifying that the limits of authorized construction work areas and locations of access roads are properly marked before clearing.
- Verifying the location of signs and highly visible flagging marking the boundaries of sensitive resource areas, waterbodies, wetlands, or areas with special requirements along the construction work area.
- Identifying erosion/sediment control and soil stabilization needs in all areas.
- Coordinate activities with agricultural inspectors and drainage specialists in farm land areas (see Section 2.4 – Responsibilities/Qualifications of Agriculture Inspectors).
- Ensuring that the location of dewatering structures and slope breakers will not direct water into known cultural resources sites or locations of sensitive species.

- Verifying that trench-dewatering activities do not result in the deposition of sand, silt, and/or sediment near the point of discharge into a wetland or waterbody. If such deposition is occurring, the dewatering activity shall be stopped and the design of the discharge shall be changed to prevent reoccurrence (See Trench Dewatering section of this Plan).
- Ensuring that subsoil and topsoil are tested in residential areas to measure compaction and determine the need for corrective action.
- Advising the Chief Inspector when conditions (such as wet weather) make it advisable to restrict construction activities to avoid excessive rutting.
- Ensuring restoration of contours and topsoil.
- Verifying that the soils imported for agricultural or residential use have been certified (if available) as free of noxious weeds and soil pests, unless otherwise approved by the landowner.
- Determining the need for and ensuring that erosion controls are properly installed, as necessary to prevent sediment flow into wetlands, waterbodies, sensitive areas, and onto roads.
- Ensuring compliance with New York State DEC State Pollution Discharge Elimination System (SPDES) General Permit for Stormwater Discharges from construction activities (See Stormwater Pollution Prevention section of this Plan).
- Inspecting and ensuring the maintenance of temporary erosion control measures at least:
    - On a daily basis in areas of active construction or equipment operation.
    - On a weekly basis in areas with no construction or equipment operation.
    - Within 24 hours of 0.5 inch of rainfall.
- Ensuring the repair of all ineffective temporary erosion control measures within 24 hours of identification.
- Keeping records of compliance with the environmental conditions of the FERC certificate, and the mitigation measures proposed by the project sponsor in the application submitted to the FERC, and other Federal or state environmental permits during active construction and restoration.
- Identifying areas that should be given special attention to ensure stabilization and restoration after the construction phase.

## 2.3 Agricultural Inspection

The Agricultural Inspection for the project will include a combination of agricultural and drainage specialists to ensure aspects of the project that affect farmland, meet or exceed: the basic standards of the NYS Department of Agriculture and Markets and project-specific conditions or orders of certification, relevant to agricultural resources, which are incorporated by the lead/certifying agency.

The Empire Pipeline Project's level of agriculture-related staffing will be dependent on the workload requirements including but not limited to: technical, pre-construction planning; construction/restoration inspection and; monitoring and follow-up remediation including drainage mitigation activities (e.g.: less staff during the pre-construction planning phase and the monitoring and the follow-up remediation phase), but will include the project's commitment to not less than four agricultural inspectors and two agricultural drainage specialists on a full-time basis through pipeline construction/restoration, which make up the peak work load phase of pipeline right-of-way activity.

**Based on the project's anticipated division into two construction work spreads, there will be one agricultural drainage specialist and two agricultural inspectors assigned full-time, per spread. However, a practical degree of flexibility will be available: should agricultural construction/restoration activity within one work spread be temporarily light enough for one agricultural inspector to fully and effectively supervise, at a time when the activities are heavy in the other work spread, then one (of the two) agricultural inspectors in the former spread may temporarily assist the staff in the latter spread. For periods of peak construction/restoration activities in agricultural lands which exceed the effective capability of the full-time staff which the project is committed to (see above), the project will provide additional temporary agricultural inspectors.**

**During phases of less intensive project activity (e.g., pre-construction planning, or dormant right-of-way winterization without construction, follow-up crop monitoring, etc.), fewer staff may be employed, as appropriate, relative to the level of activity. Regardless, the project sponsor will provide an adequate number of qualified personnel (per the responsibilities/qualifications herein) to meet the level of effort required by this plan or FERC Certificated conditions.**

**To the extent practicably feasible, the project will strive to utilize the same agricultural and drainage specialist staff during the planning, construction restoration and monitoring phases of work to allow for maximum technical continuity.**

## 2.4 Responsibilities/Qualifications of Agriculture Inspectors

Agricultural Inspector

The work of a qualified Agricultural Inspector, with the ability and the authority required to perform independently, assumes the pipeline right-of-way project aspects listed below:

- Training and education of other project sponsor staff (e.g.: land agents, craft inspectors, assistant agricultural compliance inspectors, environmental inspectors, etc.), and construction personnel, in the proper use and application of the agricultural right-of-way standards and case-specific orders of certification.
- Technical field supervision over all aspects of the project that affect agricultural resources, through each stage of on-site work: right-of-way clearing, construction stages (including compliance with trench dewatering procedures), clean-up stage and initial restoration stages.
- Technical field supervision (after the satisfactory completion of initial restoration), over the on-site monitoring of, and the follow-up restoration in, agricultural lands.
- Communication in conjunction with other project staff with affected farmland owners and operators over the project's duration: planning through construction/initial restoration, to completion of monitoring and follow-up restoration.

The key mission of each Agricultural Inspector is ensuring the project's full compliance in meeting (or exceeding) standards and case-specific conditions or orders pertaining to the affected agricultural resources.

The following are recommended qualifications for Agricultural Inspectors:

- Earned a bachelor degree or associate in applied science diploma in: agronomy or environmental sciences, with concentration in: agriculture, soils, horticulture, forestry, or closely allied science, and been employed in the respective field, regionally, not less than five years (i.e.: not fresh out of college); or-
- Advanced steadily in a career through on-the-job training and performance, regionally, for a minimum of ten years as a soil and water conservation field technician with a practical working knowledge of soil conservation, farming, surveying, land excavation and drainage, or similar types of work: from the land review, field planning and design/layout phase through construction inspection and site completion; or-
- Advanced steadily in a career through on-the-job training and field performance for a minimum of five years in pipeline construction/restoration right-of-way work, with at least two full years serving as an assistant to either a qualified agricultural or environmental compliance inspector, and have earned, and currently hold certification as, either a Professional in Erosion and Sediment Control (CPESC) or Professional in Storm Water Quality (CPSWQ); or-
- Combination of the above qualifications.

Drainage Specialist

The Agricultural Drainage Specialist is responsible for the detailed, on-site data consolidation of all surface and subsurface drainage characteristics and facilities for affected farmlands; and planning and technically supervising all drainage-related mitigation, through the planning and construction, initial restoration, post-construction monitoring and follow up restoration stages. The drainage specialist provides the specialized technical direction that enables the project to fully restore all disturbed land and all facility components of surface and subsurface drainage on affected farmland; including the effective mitigation of new or exacerbated conditions of water boils or field saturation

The drainage specialist serves as a specialized arm of the Agricultural Inspectors working in close technical coordination with them over a project's full duration, as required. The drainage specialist will provide primary technical direction of on-site drainage mitigation and follow up for all affected agricultural lands. In addition the drainage specialist may provide both technical field direction and oversight of the subcontractors specializing in agricultural drainage.

The work of a qualified drainage specialist, with the ability and technical authority to work both jointly and independently, assumes the pipeline right-of-way project aspects listed below:

- On-site inventory of all surface and subsurface drainage-related characteristics of affected farmlands, in the pre-construction planning phase. This includes location referencing for drainage such as:
  - existing features of surface runoff such as small but defined swales, up to large and broad swales;
  - existing farm features of water control such as diversion terraces, field ditches, main outlet ditches;
  - subsurface drain line systems ranging from clay tile to modern perforated polyethylene tubing; or, approximated locations of earlier stone drain systems;
  - key drainage features which are outside of the directly affected farm field[s], but may serve to receive the respective surface or subsurface drainage, e.g.: ditches and culverts of active or abandoned railroads, road ditches, etc.
- Estimating portions of farms, based on soil, terrain, and drainage/water table characteristics, where new or exacerbated conditions of water boils or field saturation should be anticipated for follow up mitigation.
- In farm lands, assisting other Agricultural and Environmental Inspectors in the advance selection of acceptable trench de- watering measures and respective locations of water discharge to avoid agricultural

impacts and estimating the pumping/associated hose length requirements necessary to ensure such avoidance of impacts.

- Ensuring the project's prompt marking/staking of all disturbed drainage facilities. Assisting the Agricultural Inspectors, as needed, in ensuring compliance with trench de-watering standards and dry backfilling (as defined in Section 4.10) of the trenches in affected farmland.
- Planning and laying out interceptor drain line systems including their safe, gravity-flow discharge to predetermined outlet locations.
- Providing on-site design, general material estimates and technical field supervision over:

  - drain line repairs and system replacements;
  - the effective engineering re-construction of un-avoided surface drainage facilities such as diversion terraces or farm waterways;
  - the installation and outlet of interceptor drain line systems.

## 3. PRECONSTRUCTION PLANNING

This Section presents the pre-construction planning efforts, further details regarding the construction activities are presented in Section 4 – Construction Activities and general sequencing of planning, installation, cleanup and restoration is presented in Section 10 – General Pipeline Construction Sequencing.

### 3.1 Construction Work Areas

Construction activities shall be confined to the approved work areas.

Identify all construction work areas (e.g., construction right-of-way, extra work space areas, pipe storage and contractor yards, access roads, etc.) that would be needed for safe construction. The project sponsor must ensure that appropriate cultural resources and biological surveys have been conducted.

#### 3.1.1 ROW & Staging Areas

Before construction begins, the right-of-way (ROW) will be surveyed and staked. Other utility lines will be located and marked to prevent accidental damage during pipeline construction.

Staging areas will be set up when the contractor starts work. Proper BMP controls will be erected prior to any sustained heavy traffic. If vehicles enter or exit the staging area onto a paved road, an entrance pad will be installed as per *BMP Drawing No. 1*.

#### 3.1.2 Access Roads

The project will make use of the ROW for access along the pipeline. Where additional access is necessary for pick up trucks and other vehicles, existing access roads may be used upon agreement with the landowner. Appropriate BMP controls will be installed and maintained on these roads, and they will be reclaimed to a condition at least equal to their pre-construction condition.

In agricultural lands topsoil will be stripped and segregated for expansion (widening or lengthening) or installation access roads (if necessary). Empire will work with landowners, and if requested by the landowner, access roads will remain in place for landowner use following construction. Alternatively, if access roads are restored to original use (e.g., tillable land) they will be fully restored using the same scope of agricultural mitigation and restoration measures that apply to pipeline construction right-of-way.

#### 3.1.3 Pipe yards

During project planning efforts have been made to site pipeyards in previously disturbed non-agricultural areas. Currently no yards are proposed in agricultural lands; however, if agricultural lands are utilized for yards, the Contractor shall strip and segregate topsoil in agricultural lands used as pipe yards. However, if any such area is used as a pipeyard it will be fully restored using the same scope of agricultural mitigation and restoration measures that apply to pipeline construction right-of-way.

### 3.1.4 Wetland/Waterbody Crossings

The pre-construction activities include survey of topographic surface elevations, in addition to the identification of wetlands and waterbodies. This survey will include elevations at the banks and center point of the crossing for both pre- and post-construction. This topographic survey of conditions will be used, in conjunction with pre-construction photograph of the crossing locations from several angles to document the pre-existing conditions of the crossing and to confirm that existing topography and profiles are re-established during restoration. All construction plans will be prepared in accordance with the FERC guidance, Empire standards and the Best Management Practices referenced otherwise in the Resource Report submittal.

Stream crossings will be inspected daily during active construction and weekly during inactive construction. Following the restoration of the stream crossing, the crossings will be inspected after major rain events. This inspection program will continue through several high water events to ensure that the stream channel is stable. After the project is complete, the entire pipeline route will be inspected twice annually as part of the normal maintenance and inspection program detailed in Resource Report 11.

## 3.2 Agricultural Area Planning

### 3.2.1 Drain Tile and Irrigation Systems

Supplementing the details of pre-construction activities, in agricultural areas, as identified in the responsibilities of the Drainage Specialist (Section 2.4), planning will include the following:

- Attempt to locate existing drain tiles and irrigation systems.
- Contact landowners and County Soil and Water Conservation Districts to determine the locations of future drain tiles that are likely to be installed within 3 years of the authorized construction.
- When working in New York State, develop procedures (with NYS DA&M) for constructing through drain tile areas, maintaining irrigation systems during construction, and repairing drain tiles and irrigation systems after construction.
- Assist in identification of the dewatering outlets and favorable locations, including off ROW, for the protected daylighting of gravity flow drain outlets for new interceptors or replaced drain lines.
- For new pipelines in areas where drain tiles exist or are planned, ensure that the depth of cover over the pipeline is sufficient to avoid interference with drain tile systems.

### 3.2.2 Grazing Deferment

Develop grazing deferment plans with willing landowners, grazing permittees, and land management agencies to minimize grazing disturbance of revegetation efforts.

## 3.3 Disposal Planning

**Determine methods and locations for the disposal of construction debris (e.g., timber, slash, mats, garbage, drilling fluids, excess rock, etc.). Off-site disposal in other than commercially operated disposal locations is subject to compliance with all applicable survey, landowner permission, and mitigation requirements. These materials will not be disposed on or buried in agricultural lands.**

### 3.4 Agency Coordination

**During the planning the project sponsor must coordinate with the appropriate local, state, and Federal agencies as outlined in this Plan and in the FERC Certificate, and for agricultural lands shall:**

- **Obtain recommendations from the County Soil and Water Conservation Districts or land management agencies regarding the identification of "highly erosive soils", permanent erosion control and revegetation specifications.**
- **Empire will consult with the appropriate technical and/or regulatory agencies (Cornell Cooperative Extension Regional Vegetable Program Specialist; at the Penn Yan, Yates County office and NYSDA&M Division of Plant Industry Albany, NY; and USDA – Animal and Plant Health Inspection Services (APHIS), Kanona (Steuben County) regarding noxious weeds and soil-borne pathogens. Empire agrees to consult with the appropriate agencies regarding agricultural biosecurity (noxious weeds and soil-borne pathogens). If necessary, based on this consultation, Empire will develop specific practical cost-effective procedures to mitigate significant agricultural biosecurity risks, if they are determined to exist in the project area.**

### 3.5 Stormwater Pollution Prevention Plan

**Make available on each construction spread the Stormwater Pollution Prevention Plan prepared for compliance with the New York State DEC State Pollution Discharge Elimination System (SPDES) General Permit for Stormwater Discharges from Construction Activities.**

# 4 CONSTRUCTION ACTIVITIES

This Section presents the details regarding specific construction activities while additional general sequencing of planning, installation, cleanup and restoration are presented in Section 10 – General Pipeline Construction Sequencing.

## 4.1 Approved Areas of Disturbance

Project-related ground disturbance shall be limited to the construction right-of-way, extra workspace areas, pipe storage yards, borrow and disposal areas, access roads, and other areas approved in the Certificate. Any project-related ground disturbing activities outside these Certificated areas, except those needed to comply with the Plan and Procedures (e.g., slope breakers, energy-dissipating devices, dewatering structures, drain tile system repairs) will require prior Director approval. All construction or restoration activities outside of the Certificated areas are subject to all applicable survey and mitigation requirements.

The construction right-of-way width for a project shall not exceed 75 feet or that described in the FERC application unless otherwise modified by a Certificate condition. However, in limited, non-wetland areas, this construction right-of-way width may be expanded by up to 50 feet of CROW and additional temporary work space without Director approval to accommodate full construction right-of-way topsoil segregation, bedrock spoil storage, and to ensure safe construction where topographic conditions (such as side-slopes) or soil limitations require it.

Project use of any additional areas is subject to landowner approval and compliance with all applicable survey and mitigation requirements. When such additional areas are used, each one should be identified and the need explained in the weekly or biweekly construction reports to the FERC, if required. The following material should be included in the reports:

- The location of each additional area by station number and reference to a previously filed alignment sheet, or updated alignment sheets showing the additional areas;
- Identification of where the Commission's records contain evidence that the additional areas were previously surveyed; and
- A statement that landowner approval has been obtained and is available in project files.

## 4.2 Residential Area Construction

The care exercised by construction crews and the qualities of cleanup following construction are paramount concerns of homeowners. Empire will make every effort to ensure that all construction activities minimize adverse impacts to residences and that cleanup is quick and thorough.

Throughout construction, traffic lanes and access to homes will be maintained except for the brief periods essential for laying the new pipeline. The Contractor will erect temporary safety fences in the vicinity of streets and homes to keep the public away from the construction zone. Empire may use techniques such as stovepipe and drag section construction in order to minimize the impacts of construction in residential

areas on a site-specific basis. Site specific residential mitigation plans will be utilized in areas with residences within 25 feet of construction right-of-way.

Homeowners will be notified in advance of any scheduled disruption of household utilities and the duration of the interruption will be kept as brief as possible. Representatives of the local utility companies will be on-site during construction when necessary. In addition, Empire will strive to accommodate any special concerns regarding ornamental shrubs, trees, or structures by avoiding them as long as such avoidance's will not unduly interfere with construction and operation of the pipeline.

Empire will take measures to ensure that construction activities will not prevent access to residential areas by fire and emergency vehicles. At least one lane of traffic will be kept open when constructing on or across residential streets. During the brief period of a few hours when a road is completely cut, steel plates will be available on site to cover the open area to permit travel by emergency vehicles.

In residential areas, topsoil replacement (i.e., importation of topsoil) is an acceptable alternative to topsoil segregation. Where topsoil segregation is conducted, maintain separation of salvaged topsoil and subsoil throughout all construction activities. Segregated topsoil may not be used for padding the pipe or filling sandbags.

Immediately after backfilling, residential areas will be cleaned up, and all construction debris will be removed. Lawns will be raked, topsoil added as necessary, and lawns restored per agreements with landowners. Ornamental shrubs will be replaced where possible. Contractors will restore fences, mailboxes, and other structures removed during construction. Sidewalks, driveways, and roads will be restored as soon as practical.

### 4.3 Agricultural Area Construction

In predominantly agricultural areas, Empire will have Agricultural Inspectors/Specialists on site during construction in accordance with the Agricultural Inspection section of this Plan. In addition, prior to construction, Empire's Drainage Specialists (in coordination with Empire land agents) will contact farm landowners and operators and the local agencies for planning purposes described in previous section.

#### 4.3.1 Topsoil Segregation

The mixing of topsoil with subsoil will be prevented by stripping and segregating topsoil from the full work area in:

- Agricultural Lands including:
    - Actively cultivated or rotated croplands or developed improved pastures; and
    - Hayfields (including long-term hayfields and Conservation Reserve Program lands);
- Residential areas; and
- Other area as required by FERC Certificated conditions.

Additionally:

- In deep agricultural soils (more than 12 inches of topsoil), stripping down to the actual depth of subsoil or 16 inches for segregation, whichever is less will be implemented. In soils with less than 12 inches of topsoil the entire topsoil layer and 1-2 inches of friable subsoil will be segregated.

Where topsoil segregation is conducted, maintain separation of salvaged topsoil and subsoil throughout all construction activities. Segregated topsoil may not be used for padding the pipe or filling sandbags.

### 4.3.2 Drain Tiles

All drainage tiles encountered shall be marked, maintained during construction, and restored to as good or better condition upon completion of construction. *BMP Drawing Nos. 30, 30A and 42* provide typical information for drain tiles where encountered. Specific details on drain tile monitoring activities are provided in Section 7.6.1.

- Encountered drain tiles shall be referenced and flagged with stakes located adjacent to the ditch, and the right-of-way edge (outer perimeters).
- When it is necessary to maintain flow in the drainage system during construction, a temporary pipe bridge shall be installed across the trench. Smaller feeder drains shall be capped so that flows are diverted to the primary drain on which the Pipe Bridge has been installed.
- Open ends of tile shall be covered to prevent ingress of dirt, rock, or wildlife.
- All drainage systems shall be probed to determine if damage has occurred. All tiles damaged during construction shall be flagged by the trenching inspector; then repaired or replaced to their original or better condition under the supervision of the Drainage Specialist. Do not use filter-covered drain tiles unless the County Soil and Water Conservation district authorities and landowner specify. Qualified Drainage specialists shall be used to ensure proper repairs and adequate probing/testing of the repaired or replaced drainage systems.
- For new pipelines in areas where drain tiles exist or are planned, ensure that the depth of cover over the pipeline is sufficient to avoid interference with drain tile systems.
- Other drainage-related impacts such as water boils and right-of-way saturation that are created or exacerbated by the pipeline project will be mitigated during monitoring and follow-up remediation (see Section 9.1 - Monitoring and Maintenance).
- Detailed records of drainage system repairs shall be maintained and given to the landowner and the County Soil and Water Conservation District offices for future reference upon request.

### 4.3.3 Irrigation

- Water flow in crop irrigation systems will be maintained unless shutoff is coordinated with the affected parties.

## 4.4 Equipment Crossings

Construction of equipment crossings will occur during the clearing or grading process. Protective measures will include the use of timber mats laid adjacent to and across streambeds if banks are high enough, flume pipe covered by fill material (clean gravel or crushed stone) or portable bridges approved by the Environmental Inspector. The size and number of flume pipes will be sufficient for maximum

**anticipated flows. Typical crossing method information is presented on *BMP Drawing Nos. 2, 9, 12, 13 and 21*.**

**Flume pipes will conform to waterbody crossing dimensions and alignments. Stream channels will not be permanently straightened or realigned to conform with flume pipe dimensions or for any other reasons, unless a permit has been acquired to do so.**

**If fill for equipment crossings includes log riprap or other material that could erode into the waterbody, sandbags will be used on both sides of the crossing. Sandbags will be placed in the waterbody, at the upstream and downstream ends of the crossing, to stabilize and seal any flume pipes used. To prevent erosion, sandbags will be placed high enough along both sides of the equipment crossing to contain the fill material during construction (hay/straw bales may also be used for this purpose, if specifically authorized by Company). Spoil disposal sites will not be located in any waterbody, wetland, floodplain or other environmentally sensitive area.**

**4.5 Road Crossings and Access Points**

**An entrance pad *(BMP Drawing No. 1)* is a temporary entrance/exit located where construction traffic enters or leaves the right-of-way onto or from a roadway or other paved surface. This access pad is typically constructed of stone or gravel. Strip topsoil and segregate for access areas and roads in agricultural and residential lands.**

**A stabilized entrance pad is intended to reduce off-site sedimentation by eliminating the tracking of excess soil onto paved public roadways. The entrance pad serves as the designated point at which all construction traffic can access and exit the right-of-way. If crushed stone access pads are used in residential or active agricultural areas, place the stone on durable synthetic fabric to facilitate removal.**

**The Grading Crew will install rock entrances at public roads. If the job kicks off at a point where an entrance pad is required, the entrance pad will be installed as soon as the immediate area required for the pad is stumped and rock can be brought in. This shall be within forty-eight (48) hours from the time the Grading Crew move onto the location.**

**For other locations along the pipeline where entrance pads are required, the pads will be installed as the Grading Crew progresses to these locations, but no later than forty-eight (48) hours from the time they reach these locations.**

**4.6 Interim Stabilization**

**Where activity ceases for 20 or more days or jobs not cleaned up by October 15 will be final graded and seeded with Aroostook (if available) winter rye at a rate of 170 pounds per acre. One hundred percent (100%) mulch will be spread on all slopes of 10% or steeper. Only weed-free straw mulch, not hay mulch, will be used where mulch is needed on agricultural land. Before permanent seeding is planted in spring, the right-of-way will be inspected and any grade or water control structures that have been damaged over the winter will be repaired.**

## 4.7 Temporary Slope Breakers

Install temporary erosion controls immediately after initial disturbance of the soil. Temporary erosion controls must be properly maintained throughout construction (on a daily basis) and reinstalled as necessary (such as after backfilling of the trench) until replaced by permanent erosion controls or restoration is compete.

- Temporary slope breakers are intended to reduce runoff velocity and divert water off the construction ROW. Temporary slope breakers may be constructed of materials such as soil, silt fence; staked hay or straw bales (straw only in agricultural lands), or sand bags.

- Install temporary slope breakers on all disturbed areas, as necessary to avoid excessive erosion. Temporary slope breakers must be installed on slopes greater than 5 percent where the base of the slope is less than 50 feet from waterbody, wetland, road crossings and the following spacing (closer spacing if necessary): (See *BMP Drawing No.* 8)

| Slope | Distance |
|---|---|
| 5 - 15% | 300 Feet |
| 15 - 30% | 200 Feet |
| > 30% | 100 Feet |

- Direct the outfall of each temporary slope breaker to a stable, well-vegetated area or construct an energy-dissipating device at the end of the slope breaker and off the construction ROW (*See BMP Drawing No. 31*).
- Position the outfall of each temporary slope breaker to prevent sediment discharge into wetlands, waterbodies, or other sensitive resources.
- Inspect and maintain temporary slope breakers throughout the construction project.

## 4.8 Sediment Barriers

Sediment barriers are intended to stop the flow of sediments and prevent the deposition of sediments into sensitive resources. They may be constructed of materials such as silt fence, staked hay or straw bales (straw only in agricultural lands), compacted earth (e.g., drivable berms across travel ways), sand bags, or other appropriate materials. Typical sediment barrier information is presented on *BMP Drawing Nos. 5 and 22*.

- At a minimum, install and maintain temporary sediment barriers across the entire construction right-of-way at the base of slopes greater than 5 percent where the base of the slope is less than 50 feet from a waterbody, wetland, or road crossing until revegetation is successful as defined in this Plan. Leave adequate room between the base of the slope and the sediment barrier to accommodate ponding of water and sediment deposition.
- Where wetlands or waterbodies are adjacent to and downslope of construction work areas, install sediment barriers along the edge of these areas, as necessary to prevent sediment flow into the wetland or waterbody.
- Install temporary sediment barriers at the base of slopes adjacent to road crossings until disturbed vegetation has been reestablished.

- Inspect and maintain all temporary sediment barriers throughout the construction project and after each rainfall.
- Maintain all temporary sediment barriers in place until permanent revegetation measures are successful or the upland areas adjacent to wetlands, waterbodies, or roads are stabilized.
- Contractor shall incorporate appropriate erosion/sediment control measures in pipe yards.
- Remove temporary sediment barriers from areas that are successfully revegetated. In agricultural lands, if access to restored farmlands is required to remove sediment barriers, access will be limited to light-weight wide tired vehicles.

### 4.9 Mulch

- Apply mulch on all slopes (except in actively cultivated cropland) concurrent with or immediately after seeding, where necessary to stabilize the soil surface and to reduce wind and water erosion. Spread mulch uniformly over the area to cover at least 75 percent of the ground surface at a rate of 3 tons/acre of straw unless the County Soil and Water Conservation District, landowner, or land managing agency approves otherwise in writing. In agricultural lands, straw mulch application will be conducted at the discretion of the Agricultural inspector.
- Mulch can consist of weed-free straw, hay, wood fiber hydro-mulch, erosion control fabric, or some functional equivalent. Hay will not be utilized in agricultural lands.
- If mulching before seeding: increase mulch application on all slopes within 100 feet of waterbodies and wetlands to a rate of 3 tons/acre of straw or equivalent.
- Mulch before seeding if: Final cleanup, including final grading and installation of permanent erosion control measures, is not completed in an area within 20 days after the trench in that area is backfilled (10 days in residential areas); or, Construction or restoration activity is interrupted for extended periods, such as when seeding cannot be completed due to seeding period restrictions.
- On all dry, sandy sites and slopes greater than 8%, spread mulch uniformly over the area to cover at least 75% of the ground surface at a rate of 3 tons/acre of straw or hay or its equivalent, unless the County Soil and Water Conservation District makes other recommendations in writing. Hay will not be utilized in agricultural lands.
- If a mulch blower is used, the strands of the mulching material shall be at least 8 inches long to allow anchoring.
- Ensure that mulch is adequately anchored to minimize loss due to wind and water.
- When anchoring by mechanical means, use a mulch-anchoring tool to properly crimp the mulch to a depth of 2 to 3 inches. When anchoring with liquid mulch binders, use rates recommended by the manufacturer. Do not use liquid mulch binders within 100 feet of wetlands or waterbodies.
- Install erosion control fabric, such as jute thatching or bonded fiber blankets, at a minimum, on waterbody banks at the time of final bank stabilization. Anchor the erosion control fabric with staples or other appropriate devices.

### 4.10 Trench Dewatering

Trench dewatering is the removal of excess runoff and groundwater (that has accumulated and is occupying the ditch line) to allow for the installation of the pipe or the completion of a pipeline tie-in, and the dry backfilling (as defined below) of the ditch. The removal of any excess water within the ditch line prior to backfilling is critical in agricultural lands; and permits ditch inspection and allows for a drier

ditch to backfill the spoil material. This enables the right-of-way to be effectively restored sooner, by the relatively faster return of workable conditions, as opposed to extended waiting until spoil material backfilled in a wet ditchline dries enough to be able to have the heavy equipment work over. Typically, the trench is dewatered, and is maintained in a dewatered state not higher in water level than six inches above the top of the trench bottom sand bag pipe supports, during the backfilling activity ("dry backfilling").

Trench dewatering management will be accomplished by using a combination of efforts or BMPs (See *BMP Drawing Nos. 5, 22, 28, 31, 35 and 39*) dependent upon the specific site conditions and may include the following:

- Sediment filtering bags *(BMP Drawing No. 28)* and/or other equivalent sediment control structures for pumped water should be used whenever water is pumped from the pipeline trench. Sediment filter bags (use only Non-woven Geotextile filter bags), when implemented and maintained properly, prevent the discharge of heavily silt-laden water - effectively trapping particles larger than approximately 150 microns. Filter bags shall be used in well-vegetated areas, providing additional filtration upon discharge. Discharge to agricultural lands will not be conducted in active crop areas unless dry conditions are present and with landowner permission. The pumping rate should not exceed the maximum recommended by the Manufacturer (for example: Pumping rate through the filter bags shall be no greater than 750 gpm or ½ the maximum specified by the manufacturer, whichever is less). The filter bags will be changed when they become half full. Their silt contents will not be deposited on agricultural lands.
- Discharge into approved upland vegetated (grassy) areas onto stable erosion resistant areas, located such that it does not allow the water to return to the right-of-way ditchline.
- Based on previous experience, filter bags have provided successful means in controlling the discharge of turbid waters If the water being discharged from the filter bag appears "milky" or excessively cloudy, then sediment corrals can be utilized to augment filter bag use, positioned at least 25 feet from any waterbody and closely monitored to ensure proper function to prevent turbid water from entering a waterbody.
- Trench dewatering using floating pump or supporting pump intakes to reduce sediments suspended in water.
- Use a splashboard or dissipation device at the point of discharge to prevent scouring of the ground.
- Filtration bags, a straw bale basin, filter cloth basins or a combination of these devices are acceptable methods of filtration for discharge of water in an insufficiently vegetated or wetland area.
- Pumping water to temporary holding areas (e.g., other sections of pipeline trench, nearby or crossed ditches, external portable tanks).
- Planning dewatering into construction sequencing to minimize amount of dewatering required. For example, during the lowering-in phase, dewatering should be accomplished before requisite construction activity occurs (such as in the morning) and backfill activity should be initiated as soon as possible following pipe installation to prevent the ditch from refilling with water when a high ground water table is present. In agricultural lands, dewatering level will be maintained, throughout backfilling operations, to no more than six inches above the top of the trench-bottom pipe support sand bags to ensure dry backfilling.
- In agricultural lands trench dewatering activities will be coordinated with the Environmental Inspector by the Agricultural Inspector/Drainage Specialists.

## 4.11 Trench Breakers

- Trench breakers are intended to slow the flow of subsurface water along the trench. Trench breakers may be constructed of materials such as sand bags, secrete bags, subsoil earth filled bags or equivalent. Topsoil shall not be used for filling trench breaker bags.
- An Engineer or similarly qualified professional shall determine the need for and spacing of trench breakers. Otherwise, trench breakers shall be installed at the same spacing as and upslope of permanent slope breakers (See BMP Drawing Nos. 6 and 8).
- In agricultural fields and residential areas where slope breakers are not typically required, install trench breakers at the same spacing as if permanent slope breakers were required (See BMP Drawing Nos. 6 and 8).
- At a minimum, install a trench breaker at the base of slopes greater than 5 percent where the base of the slope is less than 50 feet from a waterbody or wetland and where needed to avoid draining a waterbody or wetland.
- Trench breakers will be installed at intervals according to the table below and at additional locations, if necessary, in agricultural lands as recommended by the Agricultural Inspector. The base level of each breaker is established on the trench floor, prior to pipe laying, to ensure the completed breaker's control against significant water-piping and internal erosion. The bulk remainder of each trench breaker will be installed after the pipe is laid in the ditch and prior to backfill. *(See BMP Drawing No. 6*)

| Slope | Distance |
|---|---|
| 5 - 15% | 300 Feet |
| 15 - 30% | 200 Feet |
| > 30% | 100 Feet |

In agricultural lands, at the direction of the Environmental/Agricultural Inspector trench breaker heights may be adjusted to full, one-half, two-thirds, or alternating heights based on field conditions.

## 4.12 Maintenance of Erosion Control Devices

Inspecting and ensuring the maintenance of temporary erosion control measures will be conducted at least:

- On a daily basis in areas of active construction or equipment operation.
- On a weekly basis in areas with no construction or equipment operation.
- Within 24 hours of 0.5 inch of rainfall.
- Slope breakers will be checked and repaired at the end of each day where construction traffic has disturbed them.

# 5 WATERBODY CROSSINGS

**A summary of the waterbody crossings is presented in FERC Resource Report 2. Locations of the waterbody crossings are shown on the Project Alignment Sheets (Appendix 1A).**

## 5.1 Construction Restrictions

***No construction may take place in or affecting banks of these streams (based on NYSDEC guidance) during the following periods:***

**Fish Spawning or Migration**

**Wild Brown Trout, October 1 through May 15 (Shequaga Creek)**
**Stocked Brown Trout, April 1 through May 15 (Keuka Outlet)**
**Wild Brook Trout, October 1 through May 15 (Post Creek)**
**Warm water fishery of significance, May 1 through June 30 (Canandaigua Outlet)**

## 5.2 Stream Buffer Area

**Stream buffer areas must be maintained at all times. The buffer area is that area 50 feet from the top of banks on both sides of stream. Activities such as stacking cut logs, burning cleared brush, discharging water from trenches, welding pipe sections, refueling and maintaining equipment should be done outside of buffer areas. These areas should also be seeded and mulched immediately after pipeline installation. Stream crossings will be treated as a special construction crossing in order to minimize the amount of time required to complete construction. Construction equipment will not be parked or stored in the buffer area. No fuel storage, fuel transfer, oil change or hydraulic fluid additions shall occur within 100 feet of any waterway.**

## 5.3 Maintenance of Stream Crossing Control Devices

**Construction erosion control devices will be installed prior to earth disturbance of the area. They will be maintained at all times. Inspecting and ensuring the maintenance of temporary erosion control measures will be conducted at least:**

- **On a daily basis in areas of active construction or equipment operation.**
- **On a weekly basis in areas with no construction or equipment operation.**
- **Within 24 hours of 0.5 inch of rainfall.**

## 5.4 Additional Work Space Areas

**Construction staging areas for waterbody crossings will be as small as possible while still allowing for prefabrication of pipe segments that will cross the waterbody. Other additional workspaces, such as additional spoil storage areas, at waterbody crossings will also be limited to the size necessary to perform the required function. All temporary workspace areas will be located beyond the stream banks. A buffer strip of trees/vegetation is to be left undisturbed along high banks of all waterbodies and drainage's in temporary workspace areas (and permanent easement areas wherever practical). Sediment control barriers**

shall be installed and maintained along the edge of the buffer strips (width of the buffer strips is to be specified and/or approved by Empire during construction.)

Where waterbody crossings and their workspace areas are contiguous with agricultural land, the soil resource of affected agricultural land will be protected against mixing of topsoil, subsoil, and substratum by the locating of extra workspace areas, as needed, for: soil segregation and stockpiling.

### 5.5 Spoil Pile Placement/Control

Trench spoil will be stored at least 10 feet beyond stream banks at waterbody crossings, unless specified otherwise. Spoil places up gradient of stream banks will be contained with sediment control devices to prevent spoil materials from flowing into waterbodies or off of the ROW. Spoil shall not be stored within waterbodies, unless specified otherwise.

### 5.6 Waterbody Crossing Procedures

Leave at least 10 feet of ground on either side of the waterbody as a natural, vegetative strip (except for the equipment crossings). Trees greater than 4 inches in diameter may be removed from the vegetative strip at the time of initial clearing, reducing the need for large clearing equipment to return to the site during ditching or lowering-in.

### 5.7 Pipeline Construction at Streams

- Install filter fence across the right-of-way prior to construction. (See *BMP Drawing No*. 5 for proper fence installation) Make any repairs to fence as necessary after each working day. Replace filter fence across the travel area with straw bales during construction. (See *BMP Drawing No*. 22 for proper installation of straw bales)
- The stream is not to be diverted or the flow restricted. No filter fence or straw bales are to be placed directly into stream flow.
- The pipe is to be readied outside the stream buffer area prior to trenching and then installed immediately.
- Install trench breakers at the edge of stream and at base of slopes during construction as per *BMP Drawing No*. 6. Spoil from banks is to be placed > 10 feet away from the stream behind filter fence or straw bales. Ditching is to be performed from stream banks where possible.

# 6 WETLAND CROSSINGS

**A summary of the wetland crossings is presented in FERC Resource Report 2. Locations of the wetland crossings are shown on the Project Alignment Sheets (Appendix 1A).**

## 6.1 General Guidelines

**Pipeline construction will be necessary in wet areas or wetlands. Empire will insure that all construction personnel are informed that impacts on all vegetation will be kept to a minimum. Wide tracked equipment will be used and standing water will be maintained at normal levels to insure that water level and flow are kept at pre-construction levels. Where water levels are temporarily high, as a result of a recent heavy rainfall, the Company Representative may direct that the construction be postponed until after the water levels subside.**

**Vehicular traffic in wetlands and wet areas will be restricted to a minimum and access avoided to the extent possible. Wetland crossings will be treated as a special construction crossing in order to minimize the amount of time required to complete construction. Construction equipment will not be parked or stored in the wetland. No fuel storage, fuel transfer, oil change or hydraulic fluid additions shall occur within 100 feet of any wetland.**

**The following narratives described the proposed wetland crossing techniques to reduce construction-related impacts. Typical wetland crossing information is shown in *BMP Drawing Nos. 4 and 4A*. Modification to this plan may be made as dictated by soil moisture conditions at the time of construction.**

### 6.1.1 Construction in Dry Wetlands

**Dry Wetland: No standing water or saturated soil at time of construction.**

- **Standard pipeline construction methods can be used in wetlands where soils are dry enough at the time of construction to support equipment.**
- **In dry wetlands topsoil segregation must be used (as long as there is sufficient topsoil present to allow for mechanical separation by equipment).**
- **Install filter fence across ROW at edge of wetland.**
- **If spoil and silt cannot be contained within the ROW (i.e., approved working limits), install filter fence at the edge of the construction ROW; remove during cleanup.**
- **Minimize vegetation clearing and stump removal within the wetland.**
- **Remove cut vegetation and stumps in trench line.**
- **Segregate topsoil over trench-line.**
- **Install trench breakers at each wetland boundary (on upland side).**
- **Restore topsoil and seed with Annual Ryegrass (see Revegetation section of this Plan).**

### 6.1.2 Construction in Saturated Wetlands

**Saturated Wetland: Standing water or highly saturated soil at time of construction.**

- Wetlands topsoil segregation is not required.
- Minimize vegetation clearing and stump removal.
- Only remove cut vegetation and stumps in trench line.
- Permanent slope breakers will be installed at the base of all slopes adjacent to wetlands.
- Clean rock with Geo-textile or timber mats can be used for the temporary road.
- Timber mats can only be two (2) layers deep.
- Remove any timber mats used during construction in wetlands.
- Weld pipe outside the wetlands and carry in or use the push pull method.
- Install trench breaker at each wetland boundary (on upland side).
- Do not use brush mats.
- Do not use upland soils for temporary roads.

## 6.2 Standard Pipeline Construction

Standard Pipeline Construction can be used in wetlands where soils are dry enough at the time of construction to support equipment. This crossing method requires the segregation of topsoil from subsoil (as long as there is sufficient topsoil present to allow for mechanical separation by equipment).

The construction procedures that will be used to cross small wetlands will be similar to those used on dry land areas. However, if the trench contains water, trench breakers will be left in the trench prior to entering the wetland. This procedure will minimize silt discharges into the wetland. If construction activities breach a permeable layer, the bottom of the trench will be sealed.

In addition, the point at which the trench enters and exits a wetland will be sealed with trench breakers to insure the wetlands hydrologic integrity. Backfill will be well compacted, especially at the edges of the wetland. Original topographic conditions will be restored after the completion of construction.

Wetlands crossed in short segments (less than 200 feet) or where hydrologic characteristics exist at the time of construction, construction will proceed similar to that on dry land. Except for the improvements needed for the construction travel area (equipment mat) and the possible use of certain special equipment such as a dragline for trenching and backfilling.

Construction in the larger wetland areas will generally use the "push technique". Board mats will be used to provide a working surface for the movement of equipment, personnel, and materials. The trench may be excavated using a dragline or clamshell dredge. The excavated material will be stored adjacent to the trench.

The pipe will be stored and joined at staging areas located outside the wetland. As necessary, the pipe will be weighted to provide negative buoyancy and temporary floats may be attached to the pipe to provide short-term positive buoyancy. After floating the pipe into place, these floats will be cut and the pipe will settle to the bottom of the trench. This operation will be repeated, with pipe sections fabricated, pushed into place, and subsequent sections welded together until the wetland crossing is complete. The excavated material will then be placed over the pipe to backfill the trench. To maintain flow patterns within the wetland, excess soil will be removed and spread over the banks and stabilized rather than mounded over the pipe.

Revegetation of most wetland areas disturbed during construction should occur naturally and is generally favored. Emergent and shrub wetland vegetation will be allowed to become re-established; however, tree size vegetation will be controlled within the permanently maintained right-of-way.

### 6.3 Equipment Pads

In wetlands with standing water the Empire representatives may direct that equipment pads be used to prevent unnecessary damage to the soil structure. Generally several equipment pads will be laid end to end in the construction travel area.

### 6.4 Clearing

- This method requires no special stabilization techniques because conditions can support construction equipment.
- No rubber tired equipment will be allowed to work in wetlands unless the equipment will not damage existing root systems and is approved by the Chief Inspector. Bulldozers will not be used to remove timber, trees, or brush. Trees and brush will be cut at ground level by tree shears, grinders, or chain saws.
- Tree stumps will be left in place, except within the trenchline or unless their removal is necessary to ensure the safety of workers (such as on steep side hill slopes). Tree stumps may only be removed from outside the trenchline if specifically authorized by the Chief Inspector. Leaving stumps in place will facilitate rapid vegetation of the wetland by indigenous tree species following construction. Stumps may be ground to a suitable height for safety reasons.
- All timber, brush, and grindings will be removed from the wetland.
- Debris and stumps will not be buried within wetlands but may be buried in the ROW outside of wetlands (in non-agricultural lands), where permitted.
- Trees located outside of the ROW will not be cut.
- The Environmental Inspector will photo document areas before and after clearing for use in later revegetation/restoration.

### 6.5 Grading

Extensive grading will normally be unnecessary because the topography of most wetlands is level. Grading will be limited to the areas directly over the trenchline, except where topography, such as side lopes, requires additional grading for safety reasons. Where grading is required, topsoil will be segregated and returned as an even layer to all graded areas.

### 6.6 Trenching

- The topsoil in wetlands will be stripped from the ditchline and segregated if: it is not saturated and of sufficient depth to allow mechanical separation. Topsoil stripping (in non-saturated conditions) will be performed up to a depth of 12 inches (e.g., all the topsoil material present or 12 inches will be segregated in areas with greater than 12 inches of topsoil). The segregated topsoil will be stockpiled separately from subsoil for later restoration of the ROW.

- **Spoil will be contained with straw bales or silt fences to prevent the spoil from flowing off of the ROW or into waterbodies.**

**6.7 Lowering-in/Backfilling**

- **The trench will be backfilled with subsoil first. After the subsoil has been rough graded, topsoil will be replaced in an even layer. The topsoil contains seeds, rhizomes, and other plant propagules, which will aid rapid recolonization by indigenous wetland species.**
- **The Environmental Inspector must approve any additional spoil material imported from off the ROW.**
- **Where rock (boulders, etc.) was part of the surface features prior to construction of the pipeline, rock will be placed back in the wetland in approximately the same configuration, as had been the pre-construction situation. Photos will be taken of the ROW in these situations, both before and after, in order to document the nature of the situation.**
- **Trench breakers will be installed at both ends of the wetland.**

# 7 RESTORATION

## 7.1 Cleanup

- Commence cleanup operations immediately following backfill operations. Complete final grading, topsoil replacement, and installation of permanent erosion control structures within 20 days after backfilling the trench (10 days in residential areas). In agricultural lands, deep ripping of the exposed right-of-way, rock cleanup, and disposal prior to topsoil replacement and deep subsoiling are part of the restoration process prior to grading (for details on agricultural land decompaction refer to Attachment 1). If seasonal or other weather conditions prevent compliance with these time frames, maintain temporary erosion controls (temporary slope breakers and sediment barriers) until conditions allow completion of cleanup. The project sponsor will file with the Secretary for the review and written approval of the Director, a winterization plan if construction will continue into the late autumn or winter season, or if restoration will not have been completed on agricultural lands by October 1, when moisture or temperature conditions could delay successful decompaction, topsoil replacement, or permanent seeding until the following year.
- A travel lane may be left open temporarily to allow access by construction traffic if the temporary erosion control structures are installed and inspected and maintained. When access is no longer required the travel lane must be removed and the right-of-way restored.
- Rock excavated from the trench may be used to backfill the trench only to the top of the existing bedrock profile. Generally, in agricultural lands, rock will not be returned to the trench any higher than 24 inches below the exposed (topsoil-stripped) construction surface in Ontario and Yates Counties and not higher than 30 inches below the exposed construction surface in Schuyler and Chemung Counties. However, if extensive areas of shallow bedrock (within 24 to 30 inches from native surface) are encountered, Empire will limit backfill of rock to a depth of not less than 30" below pre-existing grade. Rock that is not returned to the trench should be considered construction debris, unless approved for use as cover/surface stabilization or for some other use on the construction work areas by the landowner or land managing agency.
- Remove excess rock from at least the top 12 inches of soil in all actively cultivated or rotated cropland and pastures, hayfields, and residential areas. The size, density, and distribution of rock on the construction work area should be similar to adjacent areas not disturbed by construction.
- Grade the construction right-of-way to restore pre-construction contours and leave the soil in the proper condition for planting.
- No construction debris will be left on or buried in agricultural lands.
- Remove temporary sediment barriers when replaced by permanent erosion control measures or when revegetation is successful.
- Contractor shall restore and revegetate all disturbed pipe yard areas, including lime, fertilizer, seed and mulch or restore equivalent to pre-construction conditions.

## 7.2 Permanent Slope Breakers

- Permanent slope breakers are intended to reduce runoff velocity and divert water off the construction ROW, and prevent sediment deposition into sensitive resources. Permanent slope breakers may be constructed of materials such as soil, sandbags, or some functional equivalent.

- Construct and maintain permanent slope breakers in all areas, except cultivated areas (including rotation hayland and pastures) and lawns, using the spacing recommendations obtained from the local soil conservation authority or land managing agency.
- In the absence of written recommendations, use the following spacing unless closer spacing is necessary to avoid excessive erosion on the construction right-of-way: (See *BMP Drawing No*. 8)

| Slope | Distance |
|---|---|
| 5 - 15% | 150 Feet |
| 15 - 30% | 100 Feet |
| > 30% | 50 Feet |

- Construct slope breakers with a 2 to 3% outslope to divert surface flow to a stable area without causing water to pool or erode behind the breaker. In the absence of a stable area, construct appropriate energy-dissipating devices at the end of the breaker.
- Slope breakers may extend slightly (about 4 feet) beyond the edge of the construction right-of-way to effectively drain water off the disturbed area. Where slope breakers extend beyond the edge of the construction right-of-way, they are subject to compliance with all applicable survey requirements.

## 7.3 Permanent Restoration Measures

Permanent restoration and revegetation measures serve to control erosion and sedimentation by establishing a vegetative cover which protects the soil and by using mechanical structures which can divert or slow runoff and trap sediment. The Contractor shall restore all disturbed portions of the construction ROW and supplemental work areas, as approved by Company.

- Final grading shall be completed within 10 days after the ditch is backfilled, weather and soil moisture permitting.
- All construction debris shall be removed from the ROW and the ROW shall be graded so that the soil is left in the proper condition for planting.
- Where trench compaction has not been done, the ROW shall be graded to pre-construction contours, as practical, with a small crown of soil left over the ditch to compensate for settling, but not to interfere with natural drainage. Openings shall be left in the trench-line crown to allow for lateral surface drainage, as approved by Empire representatives (Agricultural Inspectors/Drainage Specialists).
- Where topsoil has been segregated, the topsoil shall be spread back along the ROW in an even layer (as further described in Attachment 1 - Soil Protection and Subsoil Decompaction Plan).
- The Environmental Inspector may direct construction of permanent slope breakers to replace temporary erosion control barriers at road, waterbody and wetland crossings, as specified/approved. In addition, in agricultural lands, construction of permanent slope breakers at these areas will be reviewed and coordinated with the Agricultural Inspector.

## 7.4 Wetland and Waterbody Crossing Restoration

### 7.4.1 Wetlands Crossings

- All work mats, timber temporary riprap, and other construction debris shall be removed following backfilling of the pipeline.
- Once backfilling is complete, affected areas original contours and flow regimes will be restored, with the exceptions of unnatural features and unstable grades.
- The ROW will be seeded with annual rye grass (see Revegetation and Maintenance sections of this Plan) to stabilize the area until indigenous wetland species can re-establish themselves. If the affected wetland is within an active agricultural parcel, reseeding will be performed according to landowner agreements.
- If bad weather limits the effectiveness of reseeding efforts, at the discretion of the Environmental Inspector and as allowed by all applicable permits, the ROW should be mulched (with straw only) to minimize erosion until conditions are suitable for reseeding. This temporary mulch cover should be monitored and maintained until conditions are suitable for completing restoration.
- No fertilizer or lime shall be used in wetlands.

### 7.4.2 Waterbody Crossings

- Native rock from the construction right-of-way will be used to stabilize the banks where available. Do not use stream material for stabilization.
- Install slope breakers at base of slopes as per *BMP Drawing No*. 8 prior to seeding and mulching (as described above in Section 7.3).
- Seed and mulch the area immediately after pipeline installation.

## 7.5 Residential Areas Restoration

Cleanup and restoration measures in residential areas will commence upon completion of the pipeline lowering in and backfilling. The restoration and mitigation efforts in residential areas will be completed in accordance with FERC requirements and include site-specific residential mitigation plans for residences located within 25 feet of the construction areas.

In residential areas topsoil replacement (i.e., importation of topsoil) is an acceptable alternative to topsoil segregation.

## 7.6 Agricultural Mitigation

The subsoil shall be decompacted prior to replacement of the segregated topsoil. Decompaction activities shall be conducted only during periods of relatively low soil moisture to ensure the desired mitigation and prevent additional subsurface compaction. Specific additional details are included in Attachment 1 to this Plan - Soil Protection and Subsoil Decompaction Plan.

The project sponsor will file with the Secretary for the review and written approval of the Director, a winterization plan if construction will continue into the late autumn or winter season, or if restoration will not have been completed on agricultural lands by October 1, when moisture or temperature conditions could delay successful restoration until the following year in agricultural lands – including subsoil decompaction, topsoil replacement, or permanent seeding.

### 7.6.1 Subsurface Drainage Systems

Subsurface drainage systems may include a collection of subsurface pipes, such as perforated tubing or tile, that intercepts, collects and transports excess groundwater, within the soil, from a section of land. Systems may also include older emplacements of "stone drains" installed in the late 1800s and early 1900s. Subsurface drainage systems have a number of functions depending on the location and the conditions under which the tile has been installed. Drain tile can have the following impacts:

- Improvement of the seasonal soil condition in an area by regulating the seasonal water table and ground water flow serving to maintain the parcel or area for farming or similar use;
- Providing the ability to control the amount of surface water and groundwater in an existing wet area that is used for agriculture production;
- Intercepting and removing surface runoff through the ground as opposed to allowing the flow across the surface (which would increase the potential for erosion and loss of valuable topsoil):
- Serves as an outlet for an existing system or an area that may have an increase in ground saturation related to pipeline excavation activity;
- Collects groundwater for other uses such as: spring fed, shallow wells for domestic supply; irrigation; watering ponds for livestock or similar activity.

During the pre-construction planning (see Pre-Construction Planning section of this Plan) verification should be obtained from the land department files, the landowner and/or the County Soil and Water Conservation or USDA-NRCS office, as to the existing tile system that will be crossed. It is important to verify that all tiles have been distinctly marked on both sides of the excavated area and right-of-way edges (outer perimeter), for later reference. If necessary, make provisions to be able to maintain the system in working order, so as to limit impacts to existing crops from the excess groundwater for the duration of the construction activities.

During construction, drain tiles shall be identified, marked and information recorded by the drainage specialist (see Agricultural Inspection section of this Plan). If damaged during construction, repair or replacement to equivalent or better condition will be conducted by a qualified drain tile repair specialist. Typical repairs are shown on *BMP Drawing Nos. 30, 30A, and 42*, and generally include the following:

- Repairs should be designed to be installed with substantial support placed beneath the replaced section of tile to prevent the sagging of the tile line when the backfill material placed back in the trench settles, as shown on the attached repair detail.
- It is important to adequately size the repairs to match the existing tile system. Inadequately sized tile can negatively affect the entire system and render it non-functional.
- Should additional tile be necessary due to evident soil saturation, verify that the existing tile system can accommodate the additional amount of flow prior to connecting into that system. If necessary, a new system should be installed to facilitate the new lines or the existing system should be increased in size to accommodate the increase in flow amounts.
- At the time a tile is cut, the exposed ends of the drain pipe should be plugged or covered to prevent the tile from becoming clogged with dirt or rocks.

- **The trenching crew or inspector shall carefully and immediately mark the location of cut or damaged tile in a prominent manner with lath, staking or flagging securely placed in the backfill or at the edge of the right-of-way.**
- **General tile replacement or repairs shall be performed in accordance with the requirements identified in this document including the material engineering details noted in BMP Drawing No. 30, and/or local ordinances or standards which may be higher, but not lower, in their level of requirements.**
- **Any tile that may be proposed for reuse must be approved by the Drainage Specialist prior to being used again.**
- **The original gradient of the tile line shall be re-established with the replacement tile. As an alternative, the tile line can be re-routed and/or replaced, but must function as well as the original line.**

# 8 REVEGETATION

## 8.1 General

- The project sponsor is responsible for ensuring successful revegetation of soils disturbed by project-related activities.
- Restore agricultural lands based on site-specific soil data.
- Restore all turf, ornamental shrubs, and specialized landscaping in accordance with the landowners request, or compensate the landowner. Restoration work must be performed by personnel familiar with local horticultural and turf establishment practices.

## 8.2 Revegetation Operations

In general, rough grading will occur 0-3 days after backfilling. The right-of-way will then be limed and fertilized (no fertilizer or lime shall be used in wetlands). The lime and fertilizer will then be disked or blended into the worked soil. If necessary, a rock rake will then be run or stones will be hand picked by laborers. The right-of-way will then be finished with a final grade. Then seed and mulch will be applied at specified rates.

In agricultural areas, additional procedures for restoration and revegetation will be performed in accordance with those outlined in the Soil Protection and Subsoil Decompaction Plan (Attachment 1)

## 8.3 Soil Additives

Each affected farmland operator will be interviewed, by one of the respective workspread's project representatives within the appropriate time frame during planning prior to construction, for data on the most recent preconstruction application of soil additives per field. Also within the appropriate time frame, site-referenced soil testing of all affected agricultural land along the project at appropriate intervals to determine the respective soil's pH, percent of organic material, cation exchange capacity, and NPK (nitrogen, phosphorus, potassium) will be implemented. This information will be used to help establish the specific rate of lime and nutrients to be applied per field for: temporary seed cover applications; permanent seed mixtures; and (depending on time of restoration and other seasonal factors), row crop production the same season as restoration. Additional written data concerning soil modifiers will be obtained from the County Soil and Water Conservation District, or land management agencies. Based on the results of the site testing and other information, the site-specific fertilizer and soil pH modifiers will be incorporated into the top two inches of soil during or as soon as practicable after application.

## 8.4 Seeding Requirements

- In non-agricultural areas, prepare a seedbed in disturbed areas to a depth of 3 to 4 inches using appropriate equipment to provide a firm seedbed. When hydro-seeding, scarify the seedbed to facilitate lodging and germination of seed.
- Seed disturbed areas in accordance with written recommendations for seed mixes, rates, and dates in Attachment A unless a specific request is put forth by a property the landowner/operator, County Soil and Water Conservation District, the NYSDA&M, or land management agency. Unless requested by the farmland owner or operator, a long-term seeding is not required in actively cultivated croplands;

however, a temporary seeding for winter cover that is consistent with the cropland's specific management will be applied. Permanent seeding, consistent with the affected field's specific management will be applied in long-term and rotation haylands and in pastures, and agricultural croplands, as well as agricultural CRP lands.

- Perform seeding of permanent vegetation within the recommended seeding dates. If seeding cannot be done within those dates, use appropriate temporary erosion control measures and perform seeding of permanent vegetation at the appropriate time within the next recommended seeding season based on ROW soil workability (further described in Attachment 4 – NYSDA&M's Seeding, Fertilizing, and Lime Recommendation for Gas Pipeline Right-of-Way Restoration in Farmlands). Lawns may be seeded on a schedule established with the landowner.
- In the absence of written recommendations from the County Soil and Water Conservation Districts, seed all disturbed soils within 6 working days of final grading, weather and soil conditions permitting.
- Base seeding rates on Pure Live Seed. Use seed within 12 months of seed testing.
- Treat legume seed with an inoculant specific to the species using the manufacturer's recommended rate of inoculant appropriate for the seeding method (broadcast, drill, or hydro).
- In the absence of written recommendations from the local soil conservation authorities, landowner, or land managing agency to the contrary, a seed drill equipped with a cultipacker is preferred for seed application.
- Broadcast or hydro-seeding can be used in lieu of drilling at double the recommended seeding rates. Where seed is broadcast, firm the seedbed with a cultipacker or roller after seeding. In rocky soils or where site conditions may limit the effectiveness of this equipment, other alternatives may be appropriate (e.g., use of a chain drag) to lightly cover seed after application, as approved by the Environmental Inspector.
- Seed slopes steeper than 33% immediately after final grading, weather permitting.
- For two-year project timelines, the topsoil berm will be seeded when the soil in the pile is loose and fresh. The top of the berm will be flattened to allow for lightweight broadcast seeding over the entire berm.

## 8.5 Temporary Mixtures - October 1 through March 31

General site preparation, lime and fertilizer application rates and temporary seed mixtures are detailed in Attachment 4 – NYSDA&M's Seeding, Fertilizing, and Lime Recommendation for Gas Pipeline Right-of-Way Restoration in Farmlands.

## 8.6 Permanent Mixtures - April 1 through September 30

General site preparation, lime and fertilizer application rates and permanent seed mixtures are detailed in Attachment 4 – NYSDA&M's Seeding, Fertilizing, and Lime Recommendation for Gas Pipeline Right-of-Way Restoration in Farmlands.

In agricultural lands soils will be tested prior to construction by the Agricultural Inspector to determine appropriate site-specific lime and fertilizer application rates (modifying the general rates in Attachment 4 up or down accordingly).

## 9 POST CONSTRUCTION ACTIVITIES

**Conduct follow-up inspections of all disturbed areas up to two to three growing seasons (as specified below) to determine the success of revegetation.**

### 9.1 Monitoring and Maintenance

- **Revegetation in non-agricultural areas shall be considered successful if upon visual survey the density and cover of non-nuisance vegetation (or crops in cultivated cropland) is similar in density and cover to adjacent undisturbed lands.**
- **In agricultural areas, revegetation shall be considered successful if crop yields are similar to adjacent undisturbed portions of the same field. Monitoring will be performed by the Agricultural Inspector for not less than two seasons following the project's completion of initial restoration, or extended until restoration is deemed successful, to determine whether any follow up restoration activities are required. The monitoring shall include an assessment of plant populations, general appearance, and yields appropriate to the crops being monitored – as outlined in New York State Department of Agriculture and Markets – Special Crop Productivity Monitoring Procedures Paper (February 1993), included as Attachment 3 to this document.**
- **In wetland areas, revegetation and restoration progress will be recorded annually for three years post construction or until restoration is deemed successful.**
- **Continue revegetation efforts until revegetation is successful.**
- **Monitor and correct problems with topsoil replacement, soil-profile compaction, rocks, drainage and irrigation systems resulting from pipeline construction in active agricultural areas until restoration is successful.**
- **Restoration shall be considered successful if the ROW surface condition, including the topsoil and the horizon of the upper subsoil is similar to adjacent undisturbed lands, construction debris is removed (unless requested otherwise by the landowner or land managing agency), revegetation is successful, and proper drainage for agriculture, including the mitigation of right-of-way water boils and saturation, has been restored.**
- **Routine vegetation maintenance clearing shall not be done more frequently than every 3 years. However, to facilitate periodic corrosion and leak surveys, a corridor not exceeding 10 feet in width centered on the pipeline may be maintained annually in a herbaceous state. In no case shall routine vegetation maintenance clearing occur between April 15 and August 1 of any year.**
- **Efforts to control unauthorized off-road vehicle use, in cooperation with the landowner, shall continue throughout the life of the project. Maintain signs, gates, and vehicle trails as necessary.**

### 9.2 Reporting

**The project sponsor shall maintain records that identify by milepost:**

- **Method of application, application rate, and type of fertilizer, pH modifying agent, seed, and mulch used.**
- **Acreage treated**
- **Dates of backfilling and seeding**
- **Names of landowners requesting special seeding treatment and a description of the follow-up actions.**

- **Any problem areas (including details on type or nature of issue) and how they were addressed.**
- **If requested by the landowner or operator, locations of installed or repaired drainage tile lines and outlets (maps) will be provided to the landowner.**

**The project sponsor shall file with the Secretary quarterly activity reports documenting problems, including those identified by the landowner, the NYSDA&M or the County Soil and Water Conservation District, and corrective actions taken for at least 2 years following construction.**

### 9.3 Off Road Vehicle Control

**Install and maintain measures to control unauthorized vehicle access to the ROW (see also Maintenance Section of this Plan). These measures may include:**

- **Signs**
- **Fences with locking gates**
- **Slash and timber barriers, pipe barriers, or a line of boulders across the ROW**
- **Conifers or other appropriate trees or shrubs across the ROW**

## 10 GENERAL PIPELINE CONSTRUCTION SEQUENCING

### 10.1 Pre-Construction

Prior to mobilization, the Drainage Specialist/Agricultural Inspector will review drain tile systems, potential dewatering outlets, and potential outlets for interceptor systems to mitigate subsequent ROW water boils and saturation (see Pre-Construction Planning section of this Plan). In conjunction with the Environmental Inspector and the Project's construction management, the Drainage Specialist/Agricultural Inspector will review nearby or crossed ditches (see Section 4.10), for their adequacy as temporary holding areas for trench dewatering, at a minimum covering those segments of the Project's ROW through agricultural lands that are identified with high water table (HWT) soil. The staff will review the construction ROW plan, concerning agricultural lands for: a) the topsoil stockpiling locations being consistent with the upslope side of the ROW; b) the "extra work space areas" for their sufficiency of size to accommodate effective soil segregation and protection, for various special construction related activities (e.g., bore set ups and corresponding spoil areas; staging sites for waterway or road crossings, etc.); and c) location of all natural drainage swales on affected farmscapes, where adequate surface drainage gaps (through soil berms) are to be left as openings during topsoil stripping and spoil excavation management.

Before construction begins, the R.O.W. will be surveyed and staked. Other utility lines will be located and marked to prevent accidental damage during pipeline construction.

### 10.2 Staging Area

Staging areas will be set up when the contractor moves in to begin work. Proper access BMPs will be implemented prior to any sustained heavy traffic. If vehicles enter or exit the staging area onto a paved road, an entrance pad will be installed as per *BMP Drawing No.1*. Strip topsoil and segregate for staging areas (if any) residential or agricultural lands.

### 10.3 Handling of Hazardous Materials

All fuels, oils, chemicals, or other hazardous materials will be maintained in tightly sealed containers during transportation and storage. Fuels will be stored in equipment staging areas in stationary tanks. The tanks will be diked at the time of their placement in the staging area. Refueling will be performed in accordance with Section IV.A.1 of the FERC's Wetland and Waterbody Construction and Mitigation Procedures (Procedures); this includes storage of hazardous materials and the application of concrete coating. The FERC procedure is to store fuels and perform refueling at distances no less than 100 feet from a stream or wetland. In addition to the FERC's procedures, the project will not allow the maintenance of equipment within 100 feet of streams and wetlands unless not doing so may create a greater hazard if not corrected before moving equipment (e.g., patching an oil leak from a stranded backhoe). This is also shown on *BMP Drawing Nos. 4 and 4A*, note 2.

In the event of a spill or leakage, the contents will be transferred to another tank. The empty tank will be removed as well as all standing liquids caught by the dike. All obviously contaminated soils will be removed and photo-ionization meters will be used to identify any further contaminated soils. The excavated area will be backfilled with clean soil.

## 10.4 Access Roads

The project will make use of the existing ROW for access along the pipeline. Where additional access is necessary, existing access roads may be used upon agreement with the landowner. Expansion of existing access roads or creation of new access roads are subject to routine construction requirements (e.g., topsoil stripping in residential or agricultural areas). BMPs will be installed and maintained on these roads, and they will be reclaimed to a condition at least equal to their pre-construction condition unless otherwise agreed to with a landowner.

## 10.5 Clearing

This consists of the removal of trees and other obstructions from the ROW Clearing will be restricted to only that portion of the ROW necessary for actual construction. Trees, brush, and other obstructions will be cleared to permit safe and efficient use of machinery and other construction equipment. Permission will be obtained from landowners for use of access roads across their property to the ROW, for cutting trees and erecting temporary gates where necessary.

Various clearing methods will be employed, depending on tree size, contour of the land, and the ability of the ground to support clearing equipment. Marketable timber will be cut to specified lengths and stacked. All brush may be disposed of in one of several ways, depending on local restrictions and the terms of applicable permits and/or easement agreements: piled on the edge of the R.O.W. to provide cover for wildlife, burned, or chipped. Chipped wood must be removed from the ROW. After the removal of ROW vegetation temporary and permanent interceptor diversions will be installed as necessary to prevent erosion.

## 10.6 Grading

Rock outcrops, ridges, boulders, and tree stumps will be removed from the working area, and sharp topographical irregularities will be graded to ensure rapid and safe passage of the work crews. Backhoes and bulldozers will be employed for removal of tree stumps, rocks, and boulders. Burying them or setting them outside the construction area will serve to dispose of tree stumps in an approved manner, typically. No tree stumps will be buried or placed in agricultural lands. In agricultural lands as identified in Section 4.3.1 Topsoil Segregation, topsoil will be carefully stripped from the full work area (spoil stockpiling zone, trench area, pipe stringing/welding, and traffic areas) segregated from the subsoil, and preserved for later restoration of the ROW. Leveling the ROW may entail rock blasting in certain areas. Qualified, experienced personnel will conduct blasting operations. Licensed blasting experts will be employed, and blasting permits will be obtained when required by government authorities. Disposal of excess rock will be in accordance with the terms of any applicable permit and/or easement agreements.

## 10.7 Rock Entrances

The Grading Crew will install rock entrances at public roads in accordance with BMP Drawing No. 1, Entrance Pad. If the job kicks off at a point where an entrance pad is required, the entrance pad will be installed as soon as the immediate area required for the pad is stumped and rock can be brought in. This shall be within forty-eight (48) hours from the time the Grading Crew move onto the location.

For other locations along the pipeline where entrance pads are required, the pads will be installed as the Grading Crew progresses to these locations, but no later than forty-eight (48) hours from the time they reach these locations.

## 10.8 Temporary Diversions

Diversion ditches will be installed by the Grading Crew each time the crew progresses to a location where an additional diversion ditch is required according to this Plan. Example information on diversion ditches and controls are included on *BMP Drawing Nos. 11, 14, 16, 17 and 25*. The Rough Grading Crew (at the leading edge of the grading process) will install rough diversions each day for that section of the ROW, which has been rough graded. The Finish Grade Crew (at the trailing edge of the grading process) will finalize the construction of the temporary diversion ditches. After that, each succeeding crew will be responsible for maintaining the diversion ditches on a daily basis.

## 10.9 Ditching

The ditch centerline will be staked following completion of grading. The ditch will be excavated by mechanical backhoe to a depth that provides at least three (3) feet of cover on top of the pipe, except in bedrock areas, where a minimum cover of two (2) feet will be provided. In agricultural lands a minimum of (4) feet of cover will be maintained. In areas where temporary filling has been utilized, the depth will be measured from the original ground surface. During construction, excavated material is typically stored along one side of the trench while the other side is used as a work area.

The method of excavation used will depend on the specific soil conditions encountered, however, it is expected that track excavators will be required. Ditch-line breakers, usually composed of sandbags or staked straw bales, will be installed on steep slopes. Where bedrock is encountered, attempt to rip the ditch with a backhoe. Only if this technique proves unsuccessful will blasting be used.

Landowners will be contacted sufficiently in advance of construction, regarding access ways across the trench. The owner, as well as the operator (if different from the owner), of affected agricultural land will be met with by one of the respective workspread's project representatives to designate farming related access ways across the trench. Where requested by either by landowners or farmland operators, access ways across the trench will be spaced at convenient intervals to allow landowners and land operators, all sizes of farming equipment requiring access, domestic livestock, and wildlife to cross the construction area.

Drainage Specialists in coordination with Empire land agents will contact landowners to locate drainage systems installed along the pipeline. If drainage tile is present, excavation of the trench will be to a depth sufficient to meet drainage tile clearance requirements. Damaged drain tiles will be promptly repaired or replaced (see Restoration section of this Plan).

## 10.10 Lowering In

Prior to lowering in, the ditch will be cleaned of all debris; the bottom smoothed and sand bags placed at a spacing of 15 feet or less, along the ditch bottom. The pipe string will be lifted from the skid supports

and lowered directly into the ditch by using a sufficient number of sideboom tractors equipped with rubber-tired cradles and/or slings and belts to prevent damage to the pipe and pipe coating.

In areas where the ditch bottom is irregularly shaped due to consolidated rock and/or where the excavated spoil materials are unacceptable for backfilling around the pipe, padding materials may be required. Sand or screened subsoil material from the ditch excavation, or a combination of each, will be used for padding. This padding material will be placed on the bottom of the ditch, at a depth of six (6) inches, just prior to lowering in the pipe.

## 10.11 Backfilling

Before backfilling begins, a final inspection will be made to assure that all debris has been removed from the ditch and that the pipe and pipe coating are undamaged.

Where rock, gravel, or other materials are encountered of a size and shape that could cause damage to the pipe or pipe coating, select padding material will be placed around the pipe to a thickness of six (6) inches, or rock shield will be applied.

While the ditch is open the Drainage Specialist will supervise the repair or replacement of drain lines. During backfilling, the Drainage Specialist or Agricultural Inspector (in conjunction with backfill inspector) will supervise the application of the necessary measures to ensure protection from damage and permanent drain line support for gravity flow. Prior to backfilling the trench, any drain tiles across the working side of the ROW will be inspected to ensure its integrity. Tiles crushed or otherwise damaged by construction activity will be repaired or replaced to pre-construction or better condition.

In the event dewatering is required for pipe installation and backfilling additional efforts described in Section 4.10 will be employed.

On steep slopes, trench breakers consisting of sandbags, gravel, cement, or cement-filled sacks will be installed in the trench over and around the pipe to provide full protection against wash-away in areas that are vulnerable. Compacted earth or other suitable low-permeability material will be used on gentler slopes and wet areas to minimize channeling of groundwater along the ditch line.

The ditch will be backfilled using either subsoil excavated from the pipeline ditch or fill from a remote source. Multiple passes of heavy equipment will be used to compact the fill material.

Restoration and cleanup activities will occur following the pipe installation and backfill as described in Section 7.

## 10.12 Hydrostatic Testing

Before any segment of new pipeline is placed in-service, it will be hydrostatically tested to ensure it conforms to ESP SC and D.O.T. specifications. Test water will be withdrawn from nearby ponds or streams or trucked in from an off-site location. This water will be pumped into the pipeline behind a fill pig. A high-pressure pump will be used to pressurize the pipeline to designed test pressure. The test pressure will be maintained for eight (8) hours. After test, the pipe section is depressurized and test water

is discharged to an approved location where it is released back into the environment (in accordance with the project Hydrostatic Test Plan). (Reference *BMP Drawing No. 3*.)

### 10.13 Restoration and Revegetation

Final grading, topsoil replacement, and installation of permanent erosion control structures will be completed within 20 days after backfilling the trench (10 days in residential areas). If soil moisture, seasonal or other weather conditions prevent compliance with these time frames, temporary erosion controls (temporary slope breakers and sediment barriers) will be maintained until conditions allow completion of cleanup.

The pipeline ROW will be carefully cleaned up and restored following construction. When the backfilling is completed, excess rock and similar materials will be removed from the ROW along with accumulated construction debris, and the ROW will be re-graded.

Topsoil will be re-spread over the ROW in areas where it had been segregated prior to ditching. Drainage ditches, terraces, roads, and fences will be restored to their former condition. Slope breakers will be installed to divert runoff away from disturbed areas. Agricultural lands will be restored to equal or better condition (see the Restoration section and attached Soil Protection and Subsoil Decompaction Plan).

Construction equipment and surplus materials will be removed from the ROW. Pipeline markers and warning signs will be erected at roads and interspersed at points along the ROW. The ROW will be re-seeded, fertilized, and mulched unless the landowner stipulates otherwise. Revegetation will be monitored periodically. If excessive erosion occurs, these areas will be stabilized and revegetated.

## 11 REFERENCES


- Federal Energy Regulatory Commission. Upland Erosion Control, Revegetation, and Maintenance Plan, January 2003.
- Federal Energy Regulatory Commission. Wetland and Waterbody Construction and Mitigation Procedures, January 2003.
- New York State Department of Agriculture & Markets. Pipeline Construction Projects- Agricultural Mitigation through Stages of Project Planning, Construction/Restoration and Follow-Up Monitoring, November 1997.
- New York State Department of Agriculture & Markets – Special Crop Productivity Monitoring Procedures, February 1993.
- New York State Department of Agriculture & Markets – New York State Farmlands Seeding, Fertilizer, and Lime Recommendations for Gas Pipeline Right-of-Way Restoration in Farmlands, undated.
- New York State Department of Environmental Conservation. SPDES General Permit for Stormwater Discharges from Construction Activity (Permit No. GP-02-01), January 2003.

**Attachment 1**
**Soil Protection and Subsoil Decompaction Plan**

# EMPIRE CONNECTOR PROJECT

## SOIL PROTECTION
## and
## SUBSOIL DECOMPACTION MITIGATION PLAN

**January 2005**
***Revised May 2006***

## OVERVIEW OF PROCEDURES

**Successful soil protection and subsoil decompaction includes procedures generally associated with the following steps, with the detailed technical process outlined in the following Detailed Procedures Section:**

### Agency Coordination

**During project planning, construction, restoration and monitoring, agency coordination will be conducted at levels appropriate to meet the objectives in this Plan, including:**

1. **Coordinate with the appropriate agencies regarding:**
   - **Drain Tile and Irrigation Systems**
   - **Grazing Deferment**
   - **Soils**
   - **Agricultural Biological Security**
2. **Obtain written recommendations from the County Soil and Water Conservation District and the NYSDA&M regarding erosion control and revegetation specifications, both temporary and permanent. Have available all written recommendations from these or other agencies for erosion control and revegetation specifications at the project location.**
3. **The project sponsor agrees to consult with the appropriate agencies regarding agricultural biosecurity (noxious weeds and soil-borne pathogens). If necessary, based on this consultation, Empire will develop specific practical cost-effective procedures to mitigate significant agricultural biosecurity risks, if they are determined to exist in the project area.**

### Topsoil Segregation

1. **Use topsoil segregation (or topsoil replacement) methods in residential areas, and topsoil segregation when the construction right of way is wider than 30 feet in agricultural lands (as defined by the Detailed Procedures in the following section):**
   - **Annually cultivated or rotated agricultural lands or developed improved pasture lands**
   - **Hayfields**
   - **Land enrolled in USDA Conservation Reserve Program and maintained for return to tillable use, and other areas at the landowners request**
2. **Prevent the mixing of topsoil with subsoil in agricultural lands by stripping all topsoil from the full work area.**
3. **In deep agricultural soils strip topsoil in accordance with Detailed Procedures outlined in the following section.**
4. **At stream crossings, segregate topsoil from pipe trench on stream banks to facilitate re-stabilization.**

### Drain Tiles

**All drainage tiles encountered shall be marked, maintained during construction, and restored or replaced to as good or better condition upon completion of construction. Tiles shall be referenced and flagged with stakes located adjacent to the ditch and the temporary construction right-of-way edges (outer perimeter).**

**Additional details regarding drain tile maintenance, repair and/or replacement are provided in Section 4.3.2 and along with the associated BMP drawings.**

**Soil Compaction Mitigation**

**Subsoil compaction of all agricultural lands shall be relieved in two phases. First the subsoil shall be deep ripped (at times of appropriately low soil moisture) with uplifted stone removal (using standard rock-picking equipment) occurring prior or replacement of the segregated topsoil. Following topsoil replacement a second phase of decompaction will occur, that includes Paratill® deep subsoiling, and supplemental excess stone removal, of the right-of-way (including the topsoil storage area).**

## DETAILED PROCEDURES

**Topsoil Segregation**

**1.0 Use topsoil segregation methods in all the following areas:**

- **Annually cultivated or rotated agricultural lands.**
- **Hayfields, improved pastures[1], and rotation hay land/pastures.**
- **Other areas at the landowners' request**

**2.0 Prevent the mixing of topsoil with subsoil by stripping topsoil from the full work area and limit all excavating, spoil stockpiling, and traffic/equipment to the area cleared of topsoil.**

- **Note: Less than full available width of construction right-of-way may be used, provided that the topsoil and subsoil are segregated and all traffic/equipment and subsoil storage are limited to the area cleared of topsoil.**

**3.0 Stockpile both the spoil and topsoil in a manner that prevents pooling of water behind the soil piles (prevents excessive saturation of the soil), e.g.: cut a surface drainage gap through the segregated soil piles (lineal berms), and across the right-of-way, at swale crossings, and protect outlet points.**

**4.0 In deep agricultural soils (more than 12 inches of topsoil), stripping down to the actual depth of subsoil or 16 inches for segregation, whichever is less will be implemented. In soils with less than 12 inches of topsoil the entire topsoil layer and 1-2 inches of friable subsoil (as approved by the Agricultural Inspector) will be segregated.**

**5.0 At stream crossings, only segregate topsoil from pipe trench on stream banks to facilitate re-stabilization. Don't disturb the remainder of the actual bank. Agricultural topsoil stripping shall proceed out to the field's fringe, near, but not beyond the edge of the stream's riparian strip.**

**Soil Compaction Mitigation: Two Phases**

**1.0 First phase, deep-ripping the exposed subsoil. In all agricultural sections of the right-of-way where topsoil is stripped, the Contractor shall deep rip the exposed, construction surface subsoil with deep tillage devices such as a heavy duty ripping chisel or ripping chisel-plow, e.g.: V-frame or straight-frame ripper; or a heavy duty Paratill®.**

**The subsoil shall be thoroughly deep-ripped and rock picked prior to the replacement of segregated topsoil. The subsoil shall be deep-ripped to a depth of 18 to 22 inches as determined by the Agricultural Inspector. At least 40 hp of pull should be available per leg of implement, e.g.: 4 legs / 160 hp tractor.**

**Note: Due to the spacing between ripping legs (about 24 to 30 inches) a series of staggered, overlapping, "parallel rips" is employed to help ensure thorough breakup of the compacted mass of**

[1] Improved pastures: land of generally tillable quality, used predominantly for grazing but largely open (free of trees, brush, and boulders).

subsoil material. "Kittering" or a broad "S" series of cross rips will immediately follow for sites where the former "parallel" technique is inadequate for breakup of larger chunks into smaller clods.

1.1. All stones greater than 4 inches in dimension, which are brought to the surface during the de-compaction process, shall be removed, during alternating passes of the deep ripper, rock rake, wind rower, and mechanical rock picker.

1.2. Upon approval by the Agricultural Inspector of the subsoil deep ripping and the stone removal, the topsoil that has been temporarily removed for the period of construction shall then be uniformly replaced, preferably using a light to moderate weight, LGP (low ground pressure), wide-track bulldozer.

1.3. All of the first phase deep-ripping and rock picking activities, as well as topsoil replacement and second phase de-compaction activities shall be conducted only during periods of relatively low soil moisture (i.e., not in a state of plastic consistency), as verified by the Atterberg field test, to ensure the desired mitigation and prevent additional soil profile compaction. Further technical details are provided in the Soil Moisture (Workability) section below.

1.4. Once the deep-ripping phase begins, further use of the right-of-way for any traffic is prohibited.

2.0 Second phase: Following topsoil replacement - Paratill® the right-of-way preferably with a deep angled-leg subsoiler so the soil profile will be loosened to a depth of 20 to 22 inches achieving the necessary shattering of the subsoil and remove any large size uplifted rocks.

2.1. Deep soil profile shattering (by Paratill® or other approved deep tillage implement) includes the entire width of the temporary construction right-of-way: all areas that where the topsoil was stripped and replaced plus the area where the topsoil berm had been stored.

2.2. Deep soil profile shattering tools with angled legs include the 3 to 5 leg Paratill ®.

2.3. Alternative deep sub-soiling tools include such implements as but not limited to the straight leg Unverferth Zone Builder ® with 5 legs and (for narrower right-of-ways or limited hp tractors) 3 leg parabolic shanks, heavy duty subsoilers (either straight frame or V-frame). Manufacturers' such as but not limited to John Deere ® and Brillion ®.

2.4. As noted for deep ripping (above) at least 40 hp of pull should be available per leg of implement for full depth effectiveness in right-of-way conditions.

2.5. If subsequent construction and cleanup activities result in further compaction, conduct additional deep subsoiling of the agricultural soil profile, as needed.

3.0 After the completion of deep, soil profile shattering the right-of-way is lightly to moderately disked and then limed, fertilized and seeded during friable (workable) soil moisture conditions to minimize re-compaction.

## Trench Crowning and Mitigation of Trench Settling

Prior to trench crowning and during the trench backfilling, ripped or blasted bedrock or concentrated volumes of excavated stone or rock material (excavated from the trench) may be used to backfill the trench only to the top of the existing bedrock profile. Generally, in agricultural lands, rock will not be returned to the trench any higher than 24 inches below the exposed (topsoil-stripped) construction surface in Ontario and Yates Counties and not higher than 30 inches below the exposed construction surface in Steuben, Schuyler and Chemung Counties. However, if extensive areas of shallow bedrock (within 24 to 30 inches

**from native surface) are encountered, Empire will limit backfill of rock to a depth of not less than 30" below pre-existing grade.**

**All excess rock not utilized, as trench backfill, will be hauled away. The remaining backfill materials will consist of suitable subsoil over the rock fill material.**

**1.0 Rough trench crowning will occur during the backfill operation of the construction phase, using subsoil materials over the trench to allow, and compensate, for trench settling to the extent possible prior to restoration. Right-of-way crowning is the placement of a small berm or crown using two distinct layers of soil materials over the trench line in agricultural areas. Installing a berm or crown along the trenchline compensates for the settling of backfilled soils following pipeline restoration. Typically, when backfilling, air pockets or voids will remain below grade. Eventually, the below grade soils will move into the voids and creates depressions at the surface. The crown material will compensate for this settling and can be used to fill in the area that would have otherwise been a depression. *BMP No. Drawing No. 38* shows typifies the procedure.**

**<u>Note:</u> For the Empire Connector Project, if construction backfilling occurs between early autumn through winter Agricultural restoration will not be initiated until relatively drier soil conditions in late spring or early summer. Nearly all the trench settling will have occurred by mid-spring, giving the opportunity to compensate for trench settling using surplus, on site subsoil material immediately before restoration**

**Note: For the Empire Connector Project, the stockpiled topsoil (with the proper low moisture content) will be uniformly spread over the stripped portion of the affected right-of-way, after the initial deep ripping of the exposed subsoil and the rock cleanup has been completed, in late spring or early summer.**

**2.0 In areas where trench settling occurs after topsoil spreading, imported topsoil will be used to fill each depression. Attempts will be made to identify sources of topsoil free of weeds, including soliciting input from landowners of potential sources.**

**3.0 Topsoil from the right-of-way or from adjacent agricultural land will not be used to backfill depressions.**

**Soil Moisture (Workability) during Restoration, Compaction Testing during Monitoring and Remedial Action**

**1.0 <u>Soil Moisture</u> – During restoration activities check the soils for not exceeding friable (workable) moisture content using the following procedures (Atterberg field test for plastic soil consistency):**

**1.1 Exposed construction surface subsoil**

**1.1.1 Take a sample with a soil auger at a depth of 16 inches.**

**1.1.2 Roll the soil in your hand (Worm Method), to the diameter of an earthworm (1/8" diameter), and if the soil remains intact, in increments beyond 3/8" long, the soil is too wet (or "plastic"). If it breaks (crumbles) apart into 3/8" or shorter sections, the moisture content is correct (workable for deep ripping).**

**1.2 Topsoil stockpile (berm)**

1.2.1 Take samples from vicinity of the berms' lower outside and inside slopes, 9 inches deep, and from the berms' inner core (at least 24 inches inside of the berm).

1.2.2 Administer the same test for each individual sample of topsoil material, as above in 1.1.2 (worm method). If all samples test friable (workable) topsoil replacement may proceed as long as favorable soil conditions remain.

1.2.3 If the topsoil is too wet, break open the topsoil stockpile (berm) and rough spread the soil partially across the right-of-way, allow it to air dry, and then conduct re-tests, until friable (usually about 2 days minimum of clear, dry weather) and then complete the topsoil replacement.

2.0 Compaction Testing during the Post Restoration Monitoring and Maintenance - Once the moisture of the restored, full soil profile on the affected right-of-way is at or near equilibrium with the adjacent off right-of-way land, soil profile compaction testing will be conducted by the Agricultural Inspector using an appropriate soil penetrometer or other soil compaction-measuring device (in the early spring following the year of initial restoration).

2.1 Cone-type soil penetrometer, using the 3/4 inch diameter cone, or similar cone-type soil compaction measuring tool, capable of withstanding applications of at least 400 pounds-per-square-inch (psi). When the readings inside the right-of-way are less than, equal with, or no more than twenty percent greater than the subsoil density readings outside the right-of-way, the subsoil de-compaction/shattering restoration is satisfactory.

2.2 Test for soil compaction, obtaining readings at every 3-inch vertical interval from surface to 21 inches, or to the point of resistance (300 psi), through the topsoil and subsoil, across the project right-of-way in agricultural areas. These cross section tests shall be conducted at right-of-way inter-spacing (not to exceed 200 feet) sufficient to determine the need for remedial measures.

2.3 Tests shall be done on the same soil type under the similar moisture conditions and should include the following areas

2.3.1 Temporary stockpile areas

2.3.2 The trenched zone

2.3.3 Soil from undisturbed areas

2.3.4 The work area

2.3.5 Any traffic areas related to the project

2.4 It is standard to test each sampling site of a multi-site cross section at five to eight separate points of measurement of the soil profile's density, all taken in roughly the area of a thirty-inch diameter circle. The single highest and single lowest mechanical samples of the complete soil profile, per test site, are "thrown out". The remainder of the complete test samples recorded in 3-inch increments is used to calculate the soil profile's average density per 3-inch increment.

2.5 The soil profile compaction test results within the right-of-way will be compared with those of the adjacent off right-of-way portion of the affected farm field/soil unit.

2.6 If the "higher-than-threshold" measurements occur (for instance) in one out of six representative cross-sections of one long field and no similar excesses are measured in its neighboring croplands along the right-of-way, this should be viewed as an "isolated anomaly" and the soil restoration work on the subject field is generally considered adequate.

**3.0** **Where representative subsoil density on the right-of-way, or a repetitive zone within the right-of-way, exceeds the representative subsoil density outside the right-of-way, follow-up shattering of the soil profile will be performed using a deep, angled-leg subsoil tool in the respective areas of the right-of-way.**

**4.0** **Follow-up deep shattering will be applied during periods of relatively low soil moisture to ensure the desired mitigation and to prevent additional subsoil compaction. (Refer to Soil Moisture section 1.0, above)**

**5.0** **Oversized stone/rock material, which is uplifted to the surface as a result of the deep shattering, will be removed.**

**General Monitoring and Remediation**

**1.0** **General right-of-way conditions to be monitored include topsoil thickness, relative soil density (compaction), relative content of rock and large stones, trench settling, crop development, drainage and repair of severed fences, etc, for not less than two years following the project's completion.**

**Topsoil deficiency and trench settling shall be mitigated with imported topsoil that is consistent with the quality of topsoil on the affected site. Crop development/production problems maybe the result of right-of-way trench saturation or residual compaction, in which case appropriate interceptor drainage and/or de-compaction mitigation will be implemented. Results will be compared to portions of the same field located outside of the right-of-way.**

**Attachment 2**
**Best Management Practices (BMP) Drawings**

**(Included as Appendix 2B of FERC Submittal)**

| BMP Number | Title |
|---|---|
| 1. | Entrance Pad |
| 2. | Stream Crossing – Dam & Pump Energy Dissipater |
| 3. | Pipe Test Energy Dissipater |
| 4. | Wetland Crossing |
| 4A. | Wetland Travel Area |
| 5. | Filter Fence |
| 6. | Trench Breaker |
| 7. | Stream Bank Stabilization |
| 8. | Slope Breakers |
| 9. | Stream Mat |
| 10. | Road Crossing (Open Cut) |
| 11. | Diversion Ditch |
| 12. | Road Crossing (Bore) |
| 13. | Flume (Dry Ditch) Stream |
| 14. | Run Off Ditch |
| 15. | Erosion Blankets Channel Installation |
| 15A. | Specifications Erosion Blankets Channel Installation |
| 16. | Straw Bale Drop Structures For Drainage Channels |
| 17. | Rock Channel Filter |
| 18. | Road Culvert Extension Across Pipeline Trench |
| 19. | Temporary Culvert With Clean Rock Fill |
| 20. | Temporary Culvert Across Open Trench |
| 21. | Dam And Pump Stream Crossing |
| 22. | Straw Bale Installation |
| 23. | Topsoil Segregation |
| 24. | Erosion Blankets Slope Installation |
| 24A. | Specifications Erosion Blankets Slope Installation |
| 25. | Block And Gravel Drop Inlet Sediment Barrier |
| 26. | Cathodic Protection Anode Installation |
| 27. | Storm Water Channel |
| 28. | Dewatering Filter Bag |
| 29. | Road Culvert |
| 30. | Typical Drain Tile Repair Across Trench |
| 30A. | Typical Drain Tile Repair Across Trench |
| 31. | Energy Dissipater |
| 32. | Wooden Mat Bridge Pipeline Crossing |
| 33. | Bell Hole Next To Waterbody |
| 34. | Bell Hole Next To Wetland |
| 35. | Bell Hole Agricultural Field |
| 36. | Bell Hole Adjacent To Paved Road |
| 37. | Extra Work Spaces |
| 38. | Right-Of-Way Crowning |
| 39. | Discharge Method For Trench Dewatering |
| 40. | Parallel/New Submain Tile Installation |
| 41. | Lateral Intercept Drain |
| 42. | Typical Drain Tile Outlet |

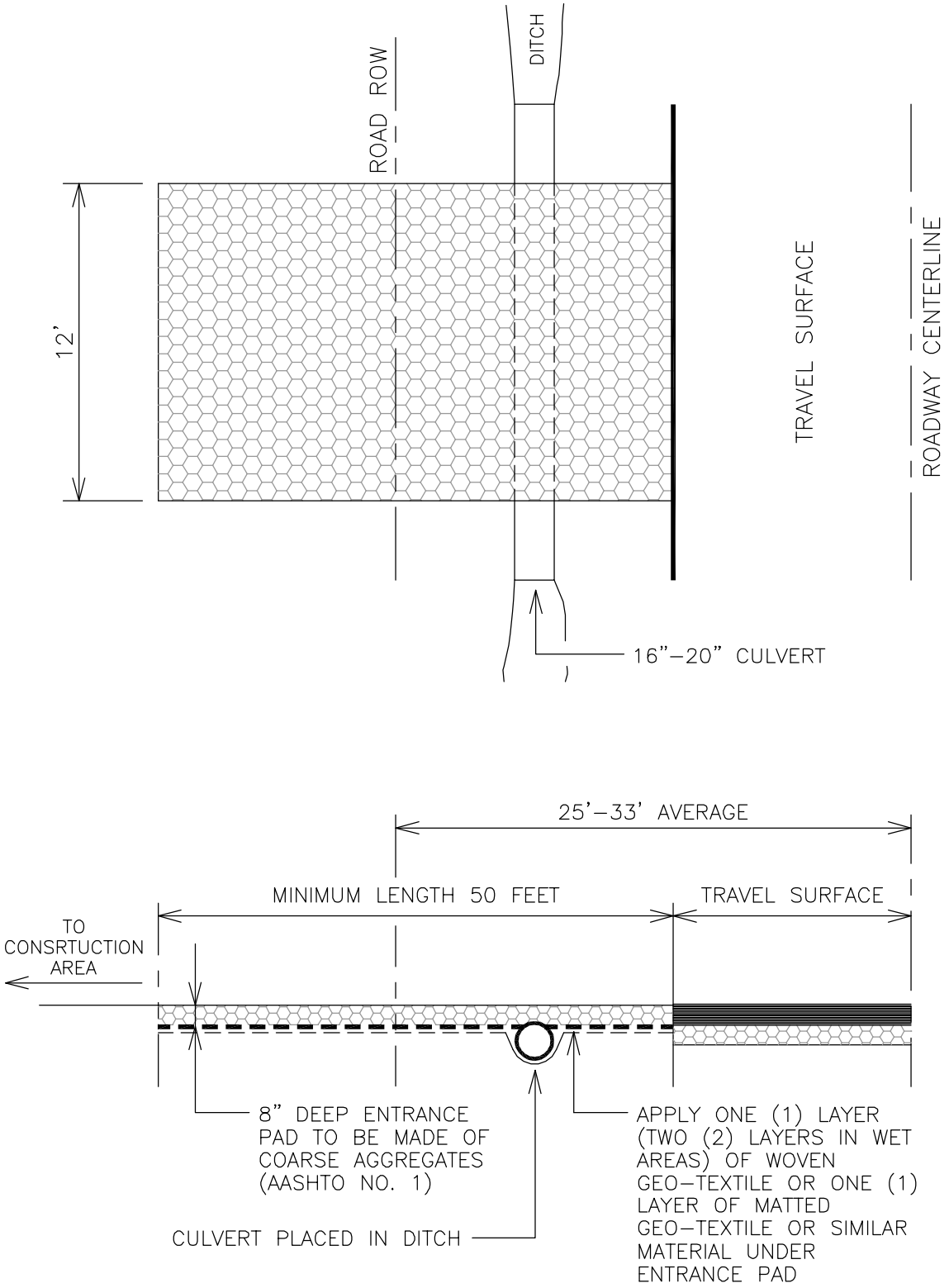


**ENTRANCE PAD TO BE USED ON BOTH SIDES OF ROADWAY**

| | | | | |
|---|---|---|---|---|
| Empire Pipeline<br>A National Fuel Gas Company | ENGINEERING DEPT.<br>1100 STATE STREET<br>P.O. BOX 2081<br>ERIE, PA. 16512<br>(814) 871–8676 | DRAWN BY: L. A. PHILLIPS<br>FILENAME: EPC\BMP01.dwg<br>DATE: 01/14/1997 | ENTRANCE PAD | DRAWING NUMBER: 1 |

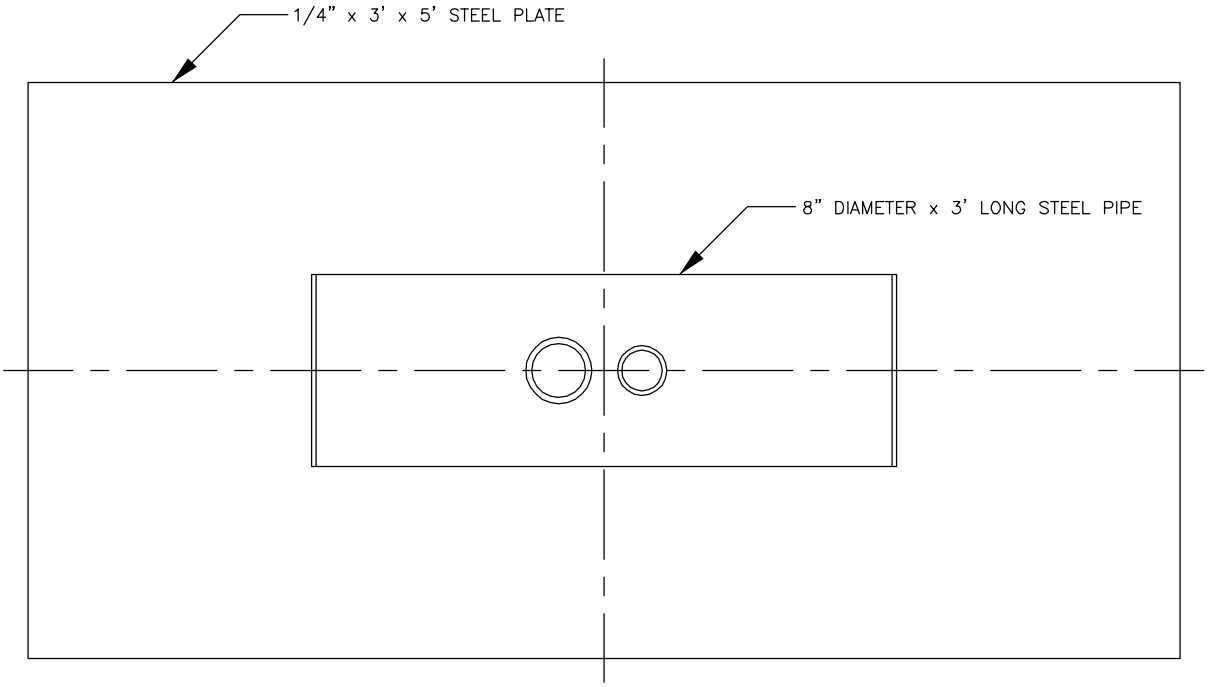


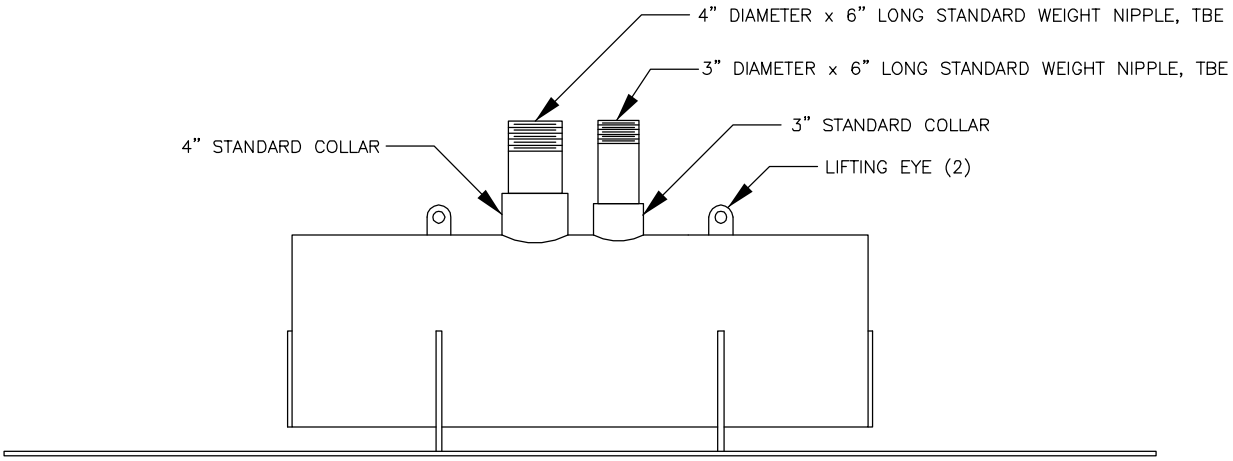


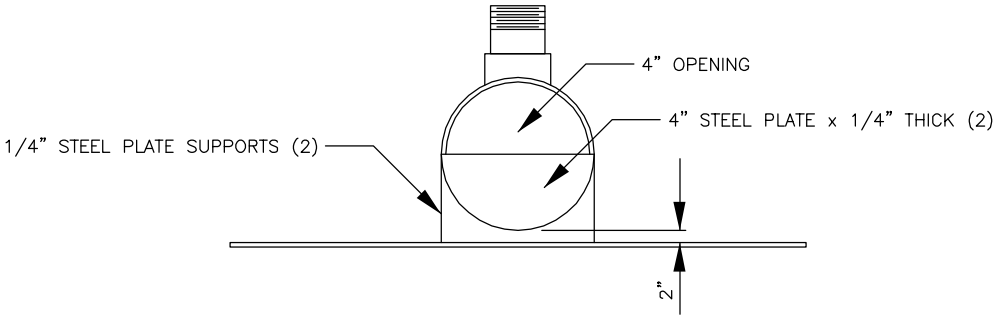


| | | | | |
|---|---|---|---|---|
| Empire Pipeline<br>A National Fuel Gas Company | ENGINEERING DEPT.<br>1100 STATE STREET<br>P.O. BOX 2081<br>ERIE, PA. 16512<br>(814) 871-8676 | DRAWN BY: L.A.P./P.A.B.<br>FILENAME: EPC\BMP02.dwg<br>DATE: 05/16/2002 | STREAM CROSSING - DAM & PUMP<br>ENERGY DISSIPATER | DRAWING NUMBER:<br>2 |

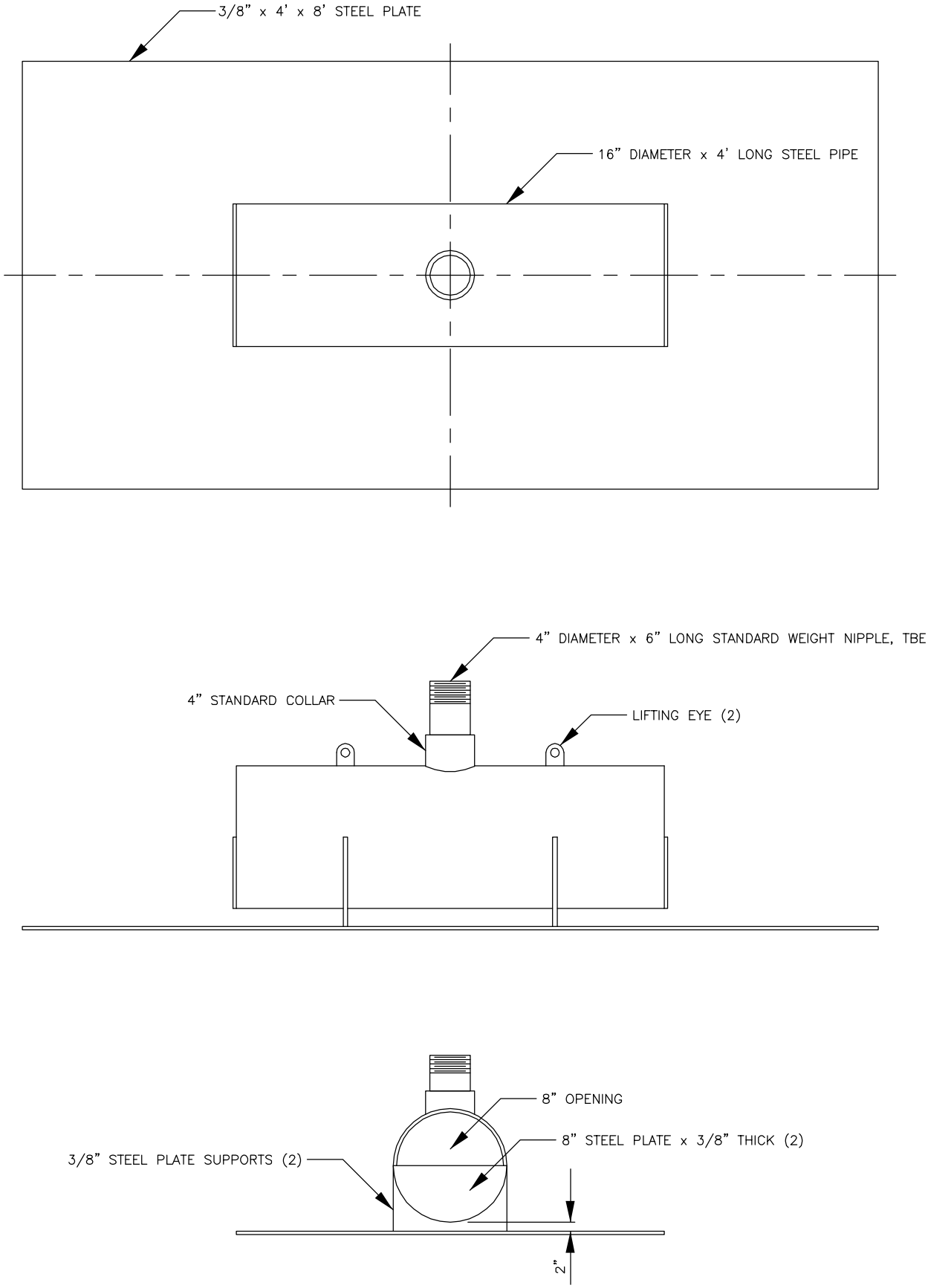


| | | | | |
|---|---|---|---|---|
| Empire Pipeline<br>A National Fuel Gas Company | ENGINEERING DEPT.<br>1100 STATE STREET<br>P.O. BOX 2081<br>ERIE, PA. 16512<br>(814) 871-8676 | DRAWN BY: L.A.P./P.A.B.<br>FILENAME: EPC\BMP03.dwg<br>DATE: 05/16/2002 | PIPE TEST<br>ENERGY DISSIPATER | DRAWING NUMBER:<br>3 |

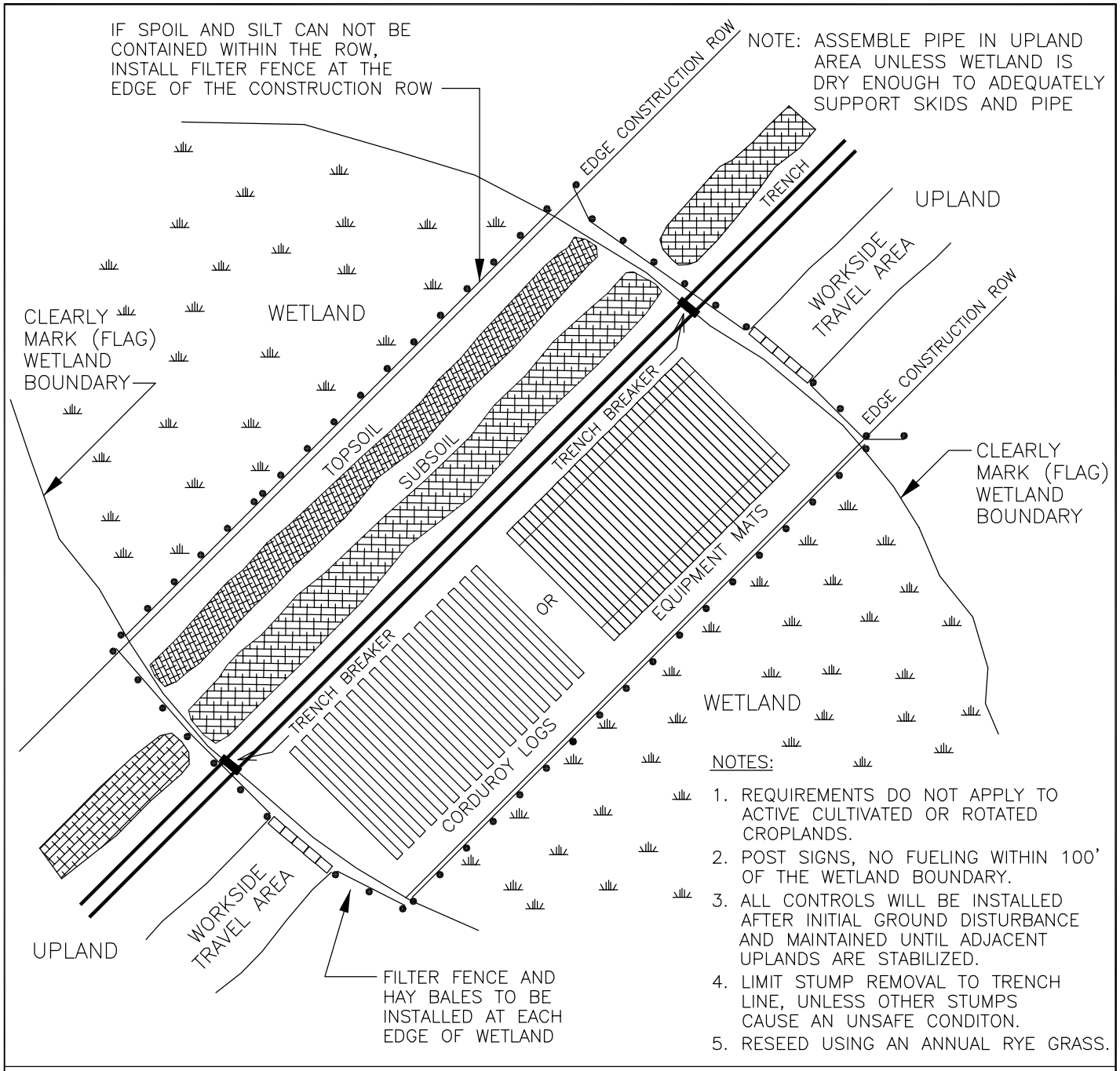


NOTES:

1. REQUIREMENTS DO NOT APPLY TO ACTIVE CULTIVATED OR ROTATED CROPLANDS.
2. POST SIGNS, NO FUELING WITHIN 100' OF THE WETLAND BOUNDARY.
3. ALL CONTROLS WILL BE INSTALLED AFTER INITIAL GROUND DISTURBANCE AND MAINTAINED UNTIL ADJACENT UPLANDS ARE STABILIZED.
4. LIMIT STUMP REMOVAL TO TRENCH LINE, UNLESS OTHER STUMPS CAUSE AN UNSAFE CONDITON.
5. RESEED USING AN ANNUAL RYE GRASS.

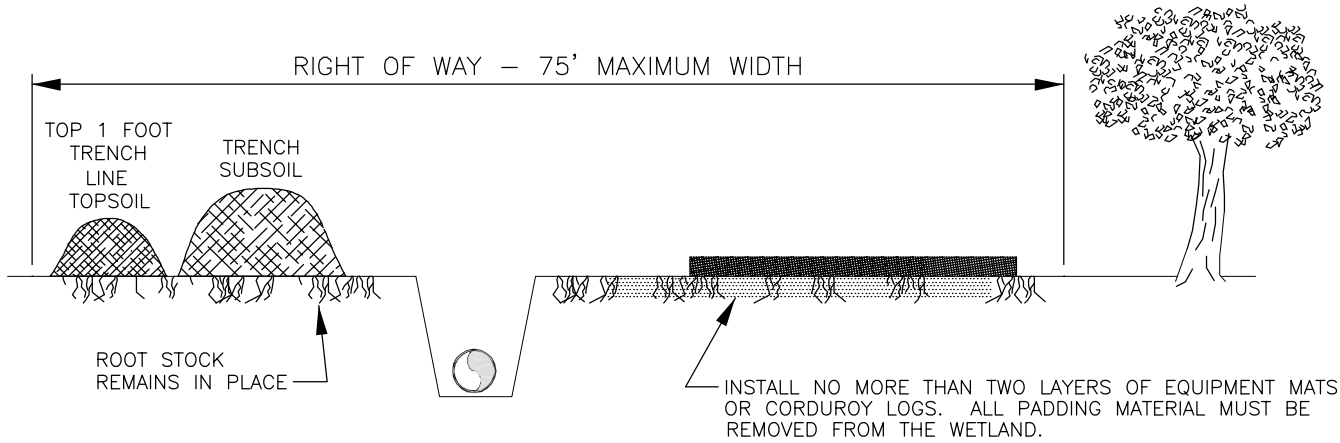


RESTORE TO ORIGINAL CONTOUR AND DRAINAGE; RESTORE TOPSOIL

| | | | | |
|---|---|---|---|---|
| Empire Pipeline — A National Fuel Gas Company | ENGINEERING DEPT. 1100 STATE STREET P.O. BOX 2081 ERIE, PA. 16512 (814) 871–8676 | DRAWN BY: DRISCOLL/PHILLIPS<br>FILENAME: EPC\BMP04.dwg<br>LAST REVISION DATE: 09/15/2003 | WETLAND CROSSING | DRAWING NUMBER: 4 |

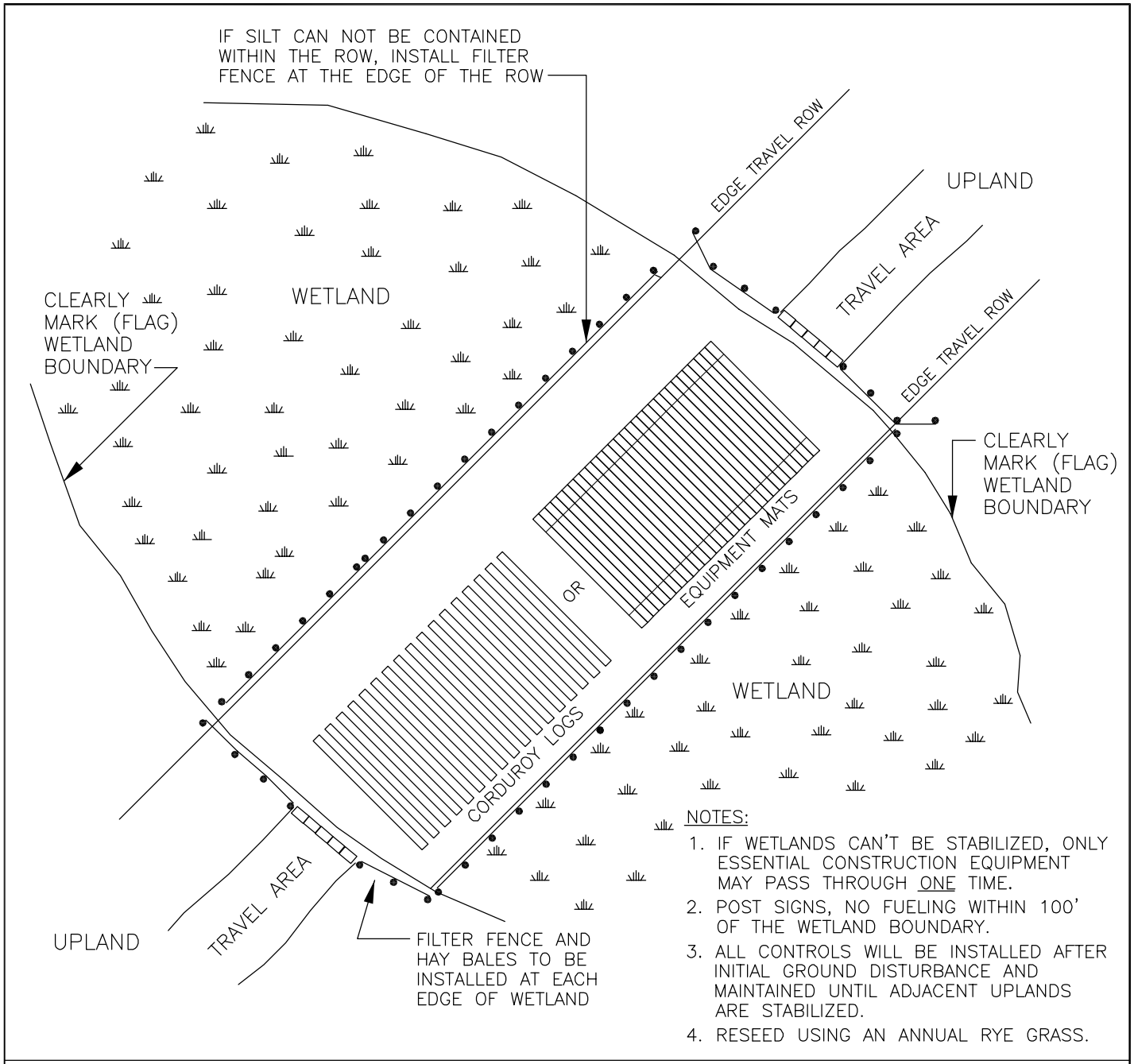


NOTES:

1. IF WETLANDS CAN'T BE STABILIZED, ONLY ESSENTIAL CONSTRUCTION EQUIPMENT MAY PASS THROUGH ONE TIME.
2. POST SIGNS, NO FUELING WITHIN 100' OF THE WETLAND BOUNDARY.
3. ALL CONTROLS WILL BE INSTALLED AFTER INITIAL GROUND DISTURBANCE AND MAINTAINED UNTIL ADJACENT UPLANDS ARE STABILIZED.
4. RESEED USING AN ANNUAL RYE GRASS.

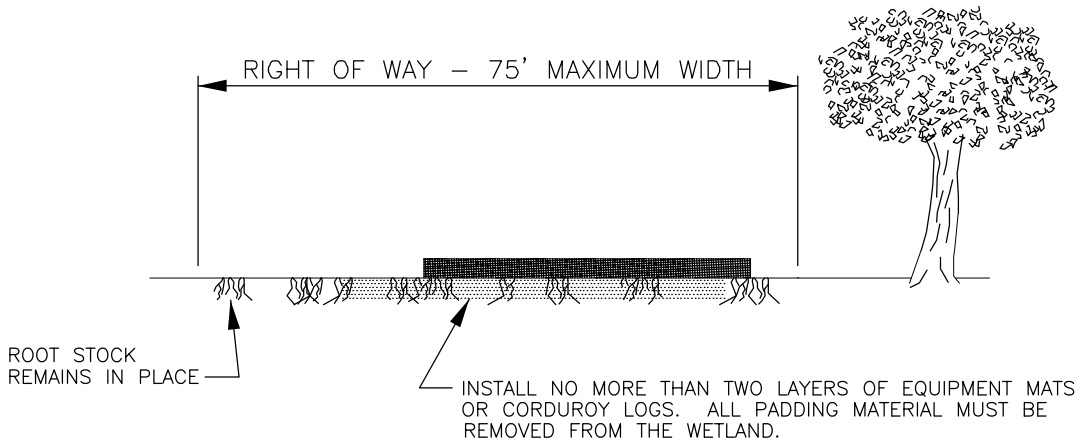


RESTORE TO ORIGINAL CONTOUR AND DRAINAGE; RESTORE TOPSOIL

| | | | | |
|---|---|---|---|---|
| Empire Pipeline — A National Fuel Gas Company | ENGINEERING DEPT. 1100 STATE STREET P.O. BOX 2081 ERIE, PA. 16512 (814) 871–8676 | DRAWN BY: DRISCOLL/PHILLIPS<br>FILENAME: EPC\BMP04A.dwg<br>LAST REVISION DATE: 09/15/2003 | WETLAND TRAVEL AREA | DRAWING NUMBER: 4A |

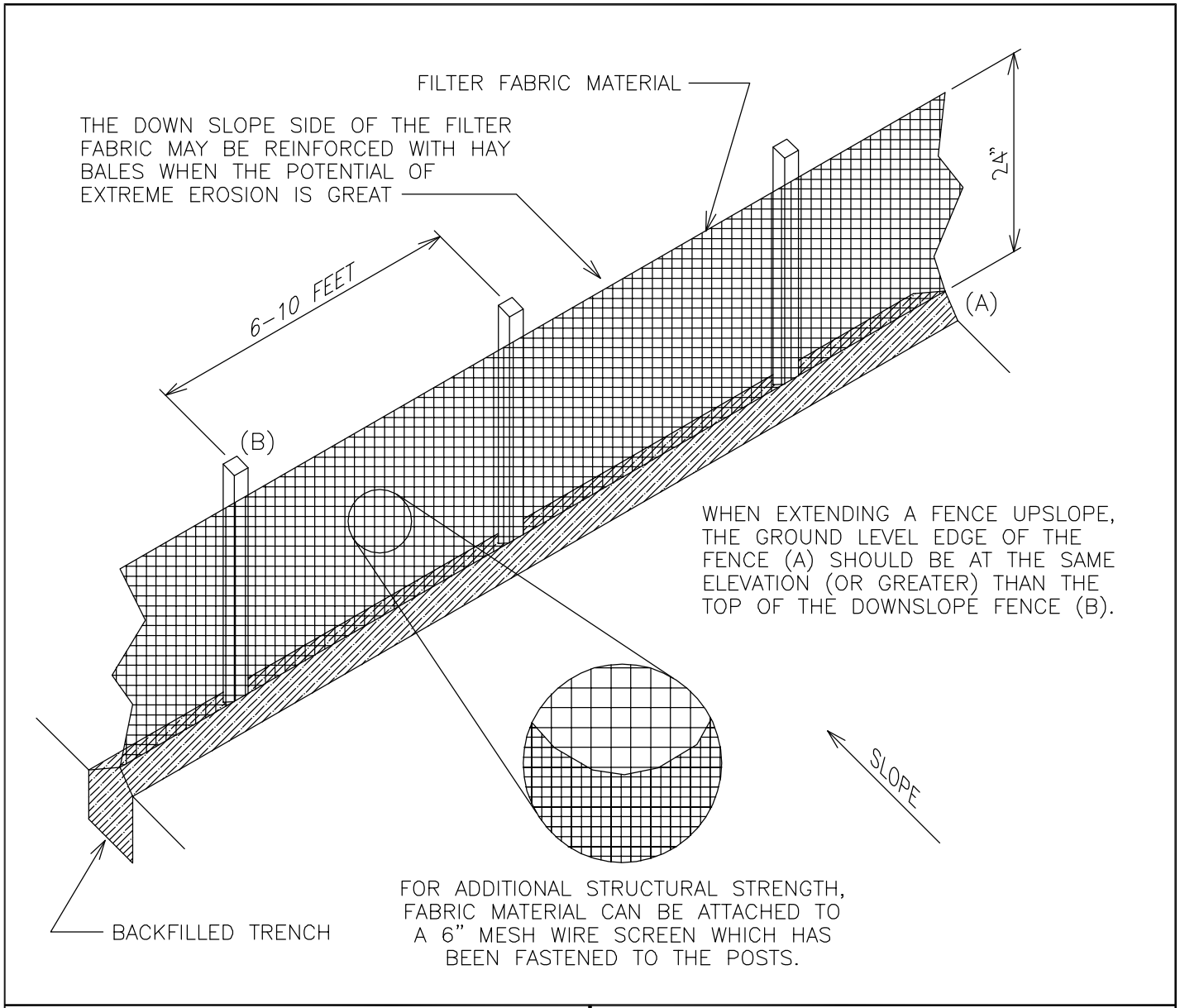


## FENCE DETAIL

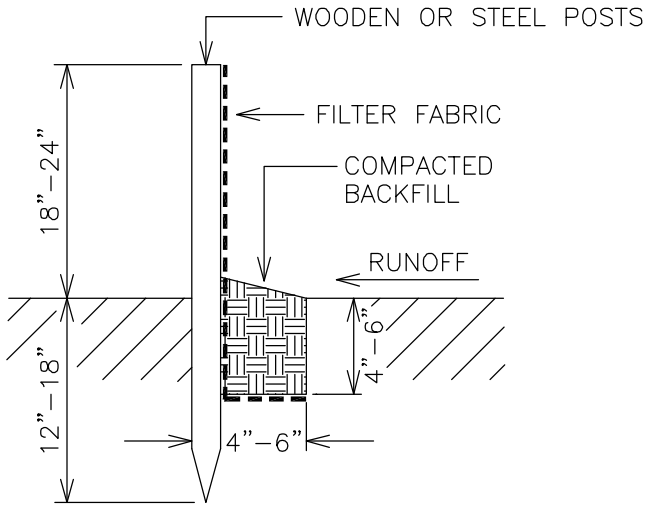


## ATTACHING TWO SILT FENCES

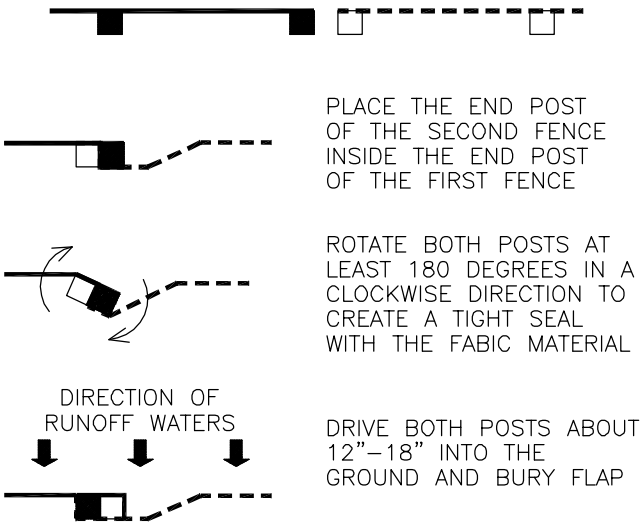


| | | | | |
|---|---|---|---|---|
| Empire Pipeline — A National Fuel Gas Company | ENGINEERING DEPT. 1100 STATE STREET P.O. BOX 2081 ERIE, PA. 16512 (814) 871-8676 | DRAWN BY: L. A. PHILLIPS<br>FILENAME: EPC\BMP05.dwg<br>LAST REVISION DATE: 09/08/2003 | FILTER FENCE | DRAWING NUMBER: 5 |

## TRENCH BREAKER SLOPE SPACING

- AS DESCRIBED IN THE ES&C PLAN, OR
- AT THE SAME SPACING AS THE PERMANENT SLOPE BREAKERS (UPSLOPE OF THE SLOPE BREAKERS), OR
- AT THE SPACING LISTED IN THE CHART ON THIS DRAWING, OR
- AT ADDITIONAL LOCATIONS IN AGRICULTURAL LANDS BASED ON RECOMMENDATIONS FROM THE AGRICULTURAL INSPECTOR.

## ADDITIONAL LOCATIONS

AS A MINIMUM, INSTALL A TRENCH BREAKER AT THE BASE OF SLOPES GREATER THAN 5% WHERE THE BASE OF SLOPE IS LESS THAN 50' FROM A WATER BODY OR WETLAND AND WHERE NEEDED TO AVOID DRAINING A WATER BODY OR WETLAND.

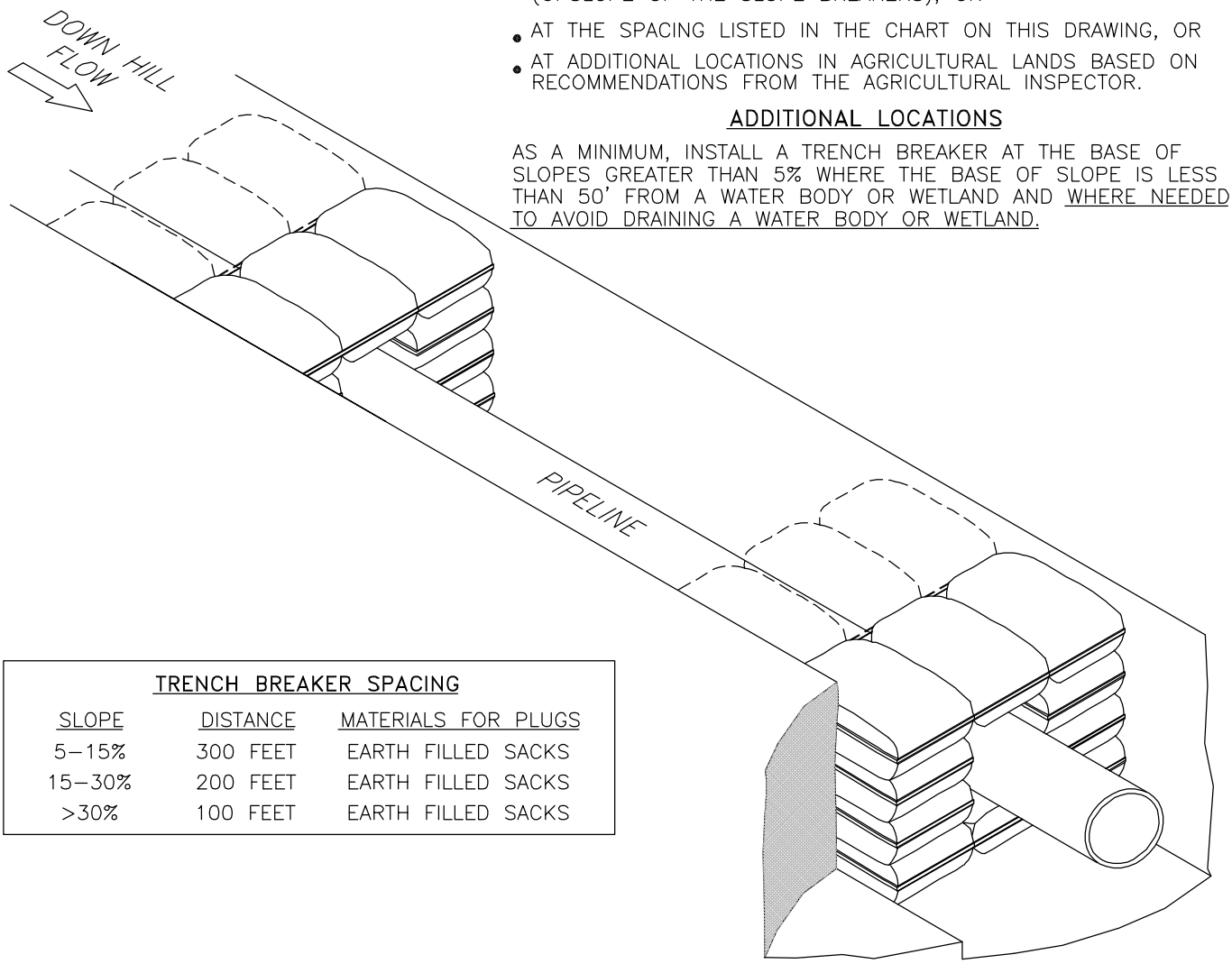


CUT–AWAY VIEW OF TRENCH BREAKER

**TRENCH BREAKER SPACING**

| SLOPE | DISTANCE | MATERIALS FOR PLUGS |
|---|---|---|
| 5–15% | 300 FEET | EARTH FILLED SACKS |
| 15–30% | 200 FEET | EARTH FILLED SACKS |
| >30% | 100 FEET | EARTH FILLED SACKS |

A SECOND ROW OF SAND BAGS MAYBE NEEDED IN AGRICULTURAL LANDS, DETERMINED BY THE AGRICULTURAL INSPECTOR.

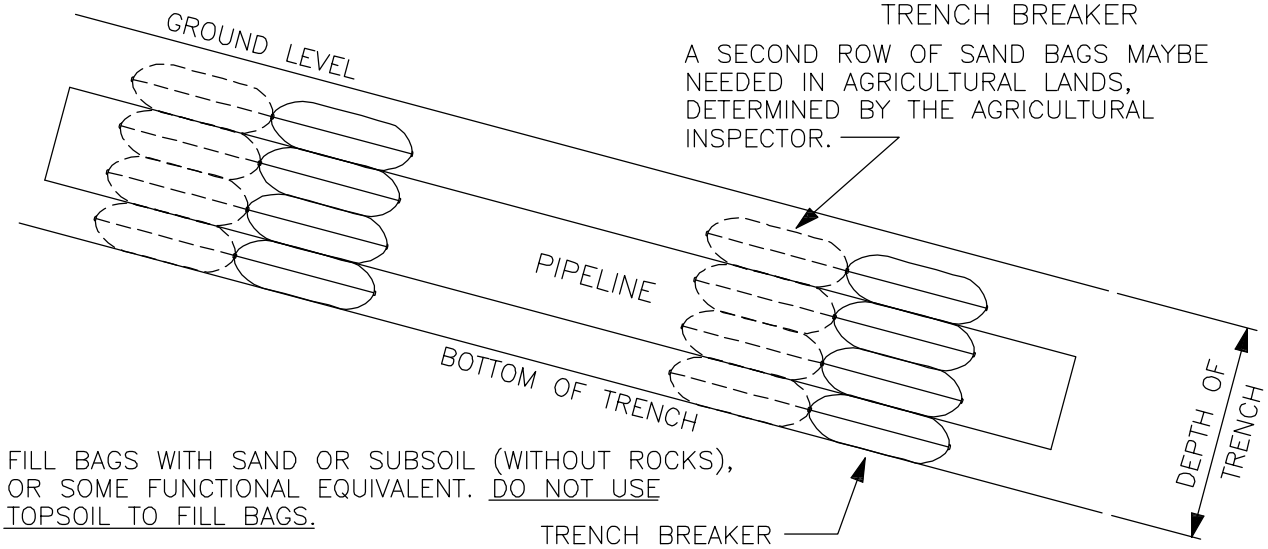


FILL BAGS WITH SAND OR SUBSOIL (WITHOUT ROCKS), OR SOME FUNCTIONAL EQUIVALENT. DO NOT USE TOPSOIL TO FILL BAGS.

| | | | | |
|---|---|---|---|---|
| Empire Pipeline — A National Fuel Gas Company | ENGINEERING DEPT. 1100 STATE STREET P.O. BOX 2081 ERIE, PA. 16512 (814) 871–8676 | DRAWN BY: L. A. PHILLIPS<br>FILENAME: EPC\BMP06.dwg<br>LAST REVISION DATE: 05/11/2006 | TRENCH BREAKER | DRAWING NUMBER: 6 |

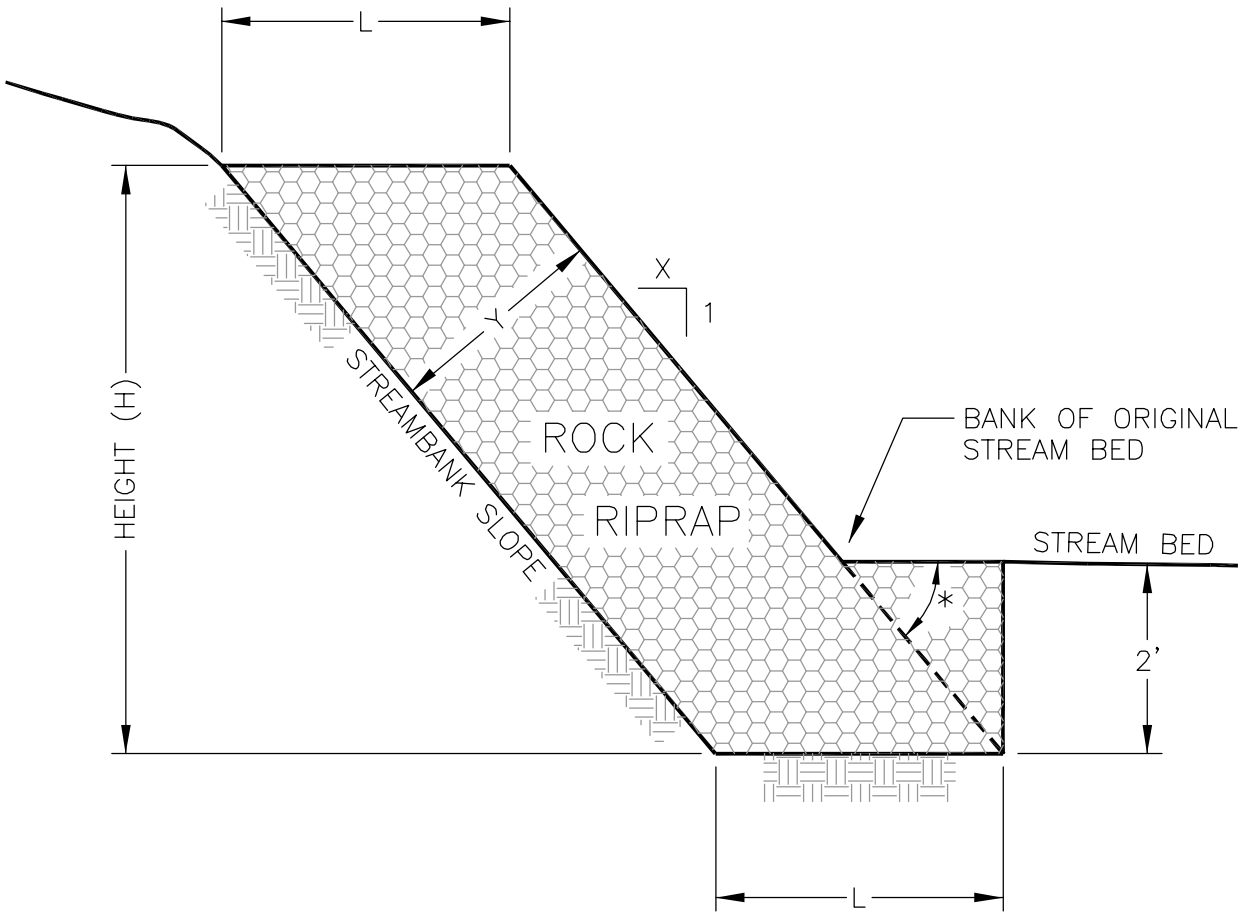


| | TABLE OF L VALUES | | | |
|---|---|---|---|---|
| (Y) ROCK THICKNESS | SIDE SLOPES | | | |
| | 1.5:1 | 2:1 | 2.5:1 | 3:1 |
| 12" | 1.8' | 2.2' | 2.7' | 3.2' |
| 18" | 2.7' | 3.4' | 4.0' | 4.7' |
| 24" | 3.6' | 4.5' | 5.4' | 6.3' |
| 30" | 4.5' | 5.6' | 6.7' | 7.9' |
| 36" | 5.4' | 6.7' | 8.1' | 9.5' |
| 42" | 6.3' | 7.8' | 9.4' | 11.1' |
| 48" | 7.2' | 8.9' | 10.8' | 12.7' |
| * | 33.69° | 26.57° | 21.80° | 18.43° |

FORMULAS TO CALCULATE LENGTH OF RIPRAP (L)

$$L = \frac{Y}{\sin *} \quad \text{OR} \quad L = Y\sqrt{X^2 + 1}$$

(ENTER "Y" IN FEET)

| | | | | |
|---|---|---|---|---|
| Empire Pipeline — A National Fuel Gas Company | ENGINEERING DEPT. 1100 STATE STREET P.O. BOX 2081 ERIE, PA. 16512 (814) 871-8676 | DRAWN BY: L. A. PHILLIPS<br>FILENAME: EPC\BMP07.dwg<br>DATE: 01/07/1997 | STREAM BANK STABILIZATION | DRAWING NUMBER: 7 |

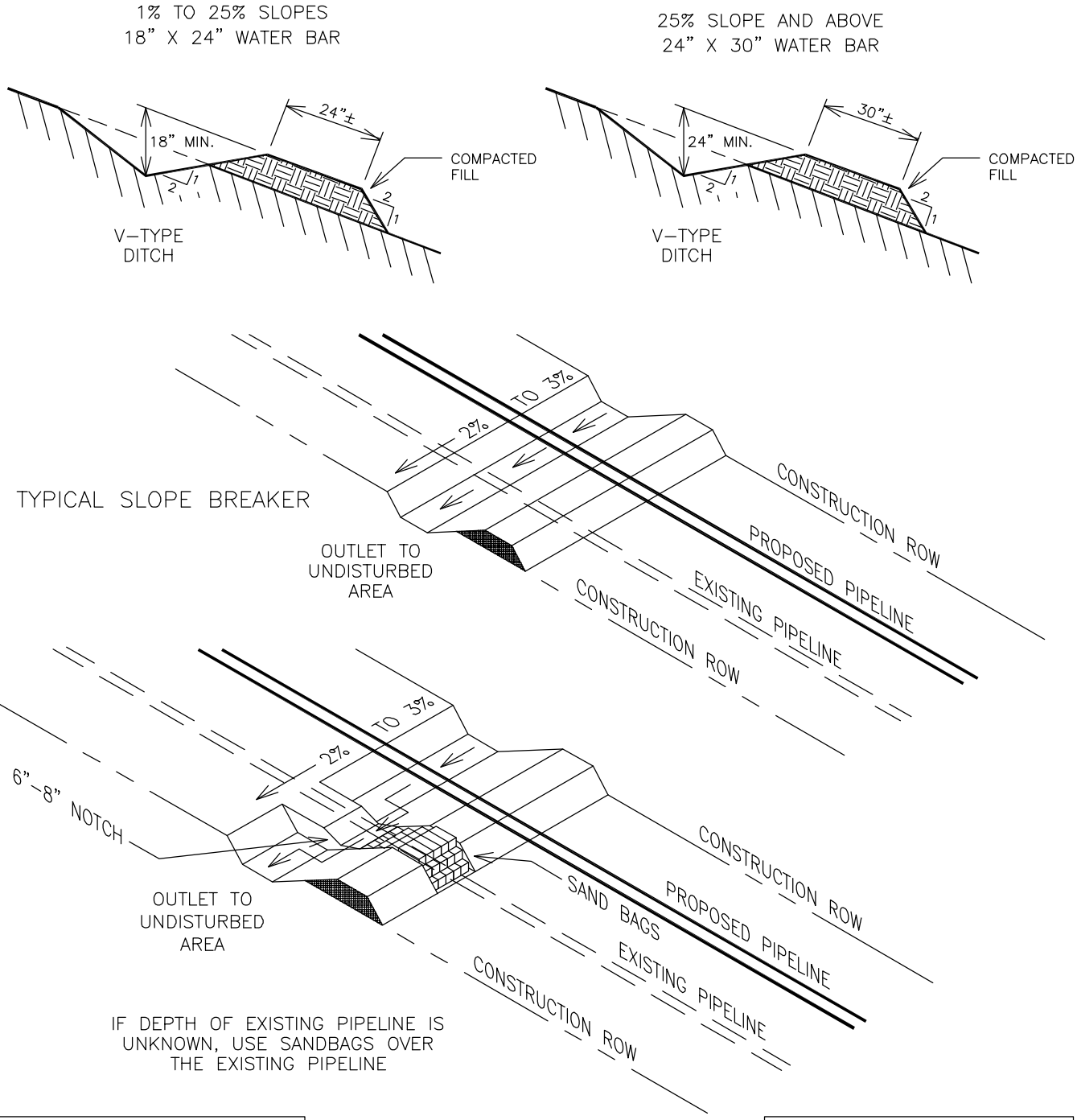


| TEMPORARY SLOPE BREAKER SPACING | |
|---|---|
| SLOPE | DISTANCE |
| 5–15% | 300 FEET |
| 15–30% | 200 FEET |
| >30% | 100 FEET |

| PERMANENT SLOPE BREAKER SPACING | |
|---|---|
| SLOPE | DISTANCE |
| 5–15% | 150 FEET |
| 15–30% | 100 FEET |
| >30% | 50 FEET |

NOTES:

1. DO NOT INSTALL SLOPE BREAKERS TO OUTLET IN THE DIRECTION OF HOUSES OR BUILDINGS.
2. ANY BREAKERS THAT OUTLET ONTO A GRASS YARD WILL BE FILTERED BY A FILTER FENCE.
3. INSTALL AT THE BASE OF SLOPES ADJACENT TO WATERBODIES AND WETLANDS.
4. BREAKERS MAY EXTEND UP TO 4' BEYOND THE EDGE OF CONSTRUCTION IF THE AREA IS ENVIRONMENTALLY CLEARED.

| | | | | |
|---|---|---|---|---|
| Empire Pipeline — A National Fuel Gas Company | ENGINEERING DEPT. 1100 STATE STREET P.O. BOX 2081 ERIE, PA. 16512 (814) 871–8676 | DRAWN BY: L. A. PHILLIPS<br>FILENAME: EPC\BMP08.dwg<br>LAST REVISION DATE: 02/23/2005 | SLOPE BREAKERS | DRAWING NUMBER: 8 |

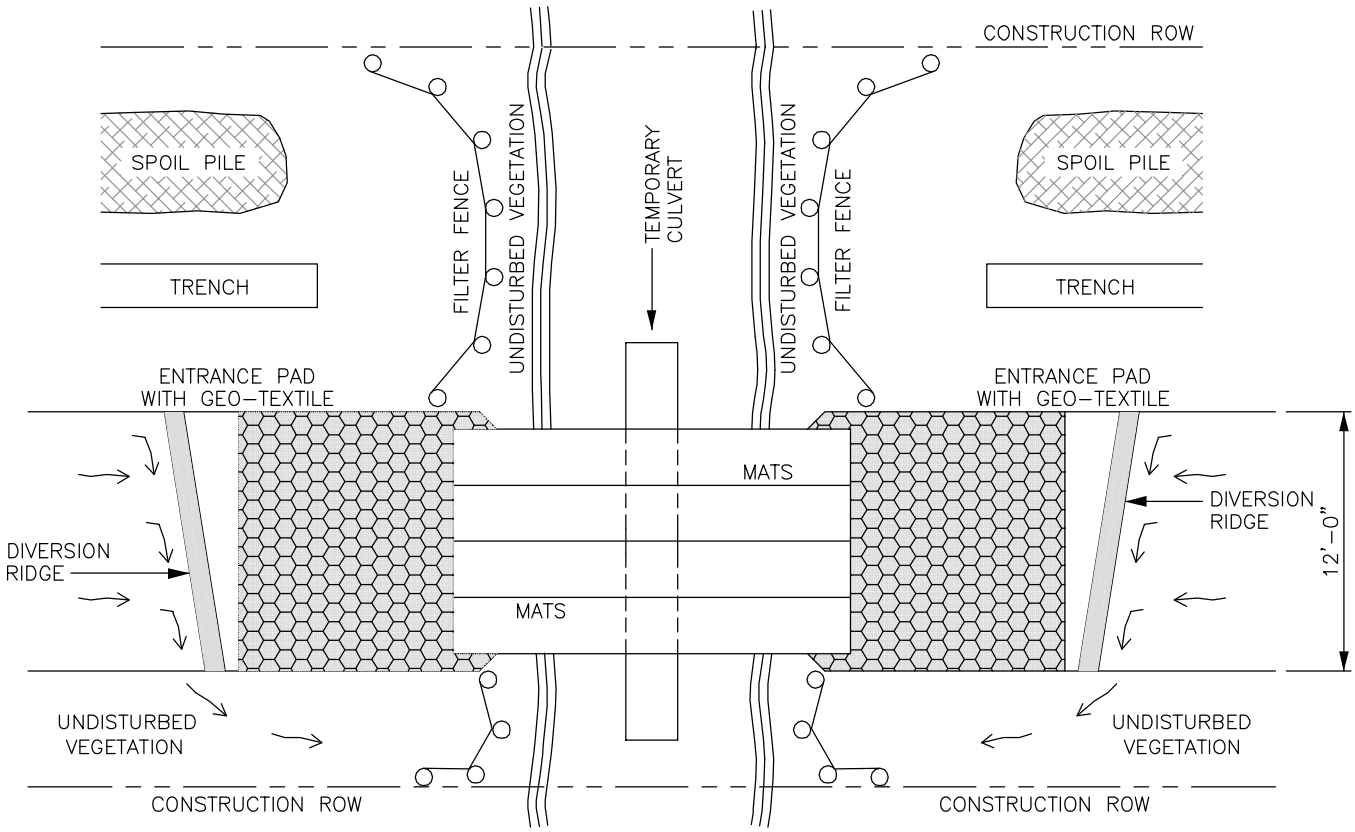


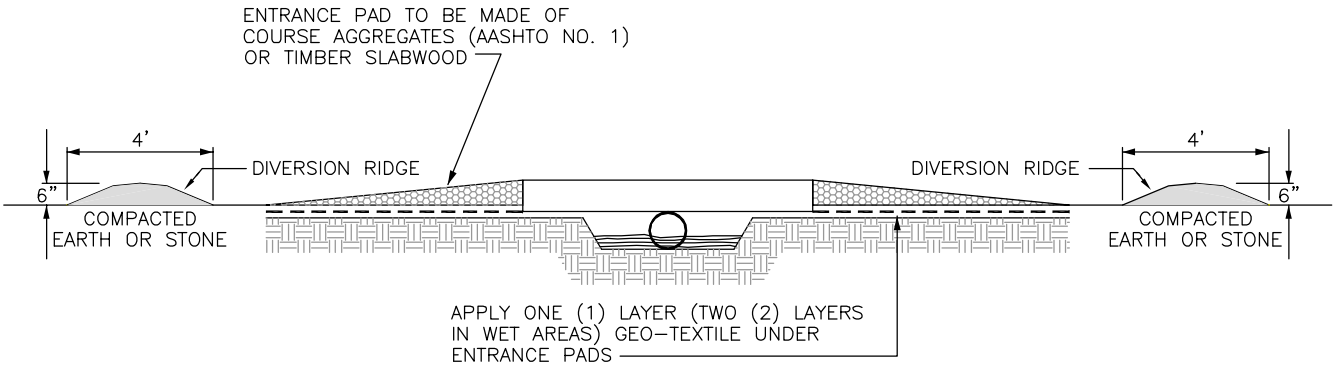


1. ONLY CLEARING EQUIPMENT AND EQUIPMENT NECESSARY FOR INSTALLATION OF EQUIPMENT BRIDGES MAY CROSS WATERBODIES PRIOR TO BRIDGE INSTALLATION. LIMIT THE CROSSING OF EACH WATERBODY TO ONE PER PIECE OF CLEARING EQUIPMENT.
2. INSTALL FILTER FENCE ACROSS THE DISTURBED AREA OF THE R.O.W.
3. APPLY GEO–TEXTILE UNDER ENTRANCE PADS.
4. EXCESS MUD IS TO BE REMOVED FROM THE ENTRANCE PADS AND MATS DURING CONSTRUCTION.
5. DURING FINAL CLEAN UP WHEN MATS, CULVERT, CLEAN ROCK FILL, ETC. ARE REMOVED, INSTALL FILTER FENCE ACROSS THE ENTIRE R.O.W. ON BOTH SIDES OF STREAM.
6. LOCATE ALL SPOIL A MINIMUM OF 10 FEET FROM THE WATERS EDGE.

| | | | | |
|---|---|---|---|---|
| Empire Pipeline<br>A National Fuel Gas Company | ENGINEERING DEPT.<br>1100 STATE STREET<br>P.O. BOX 2081<br>ERIE, PA. 16512<br>(814) 871–8676 | DRAWN BY: L. A. PHILLIPS<br>FILENAME: EPC\BMP09.dwg<br>LAST REVISION DATE: 09/09/2003 | STREAM MAT | DRAWING NUMBER: 9 |

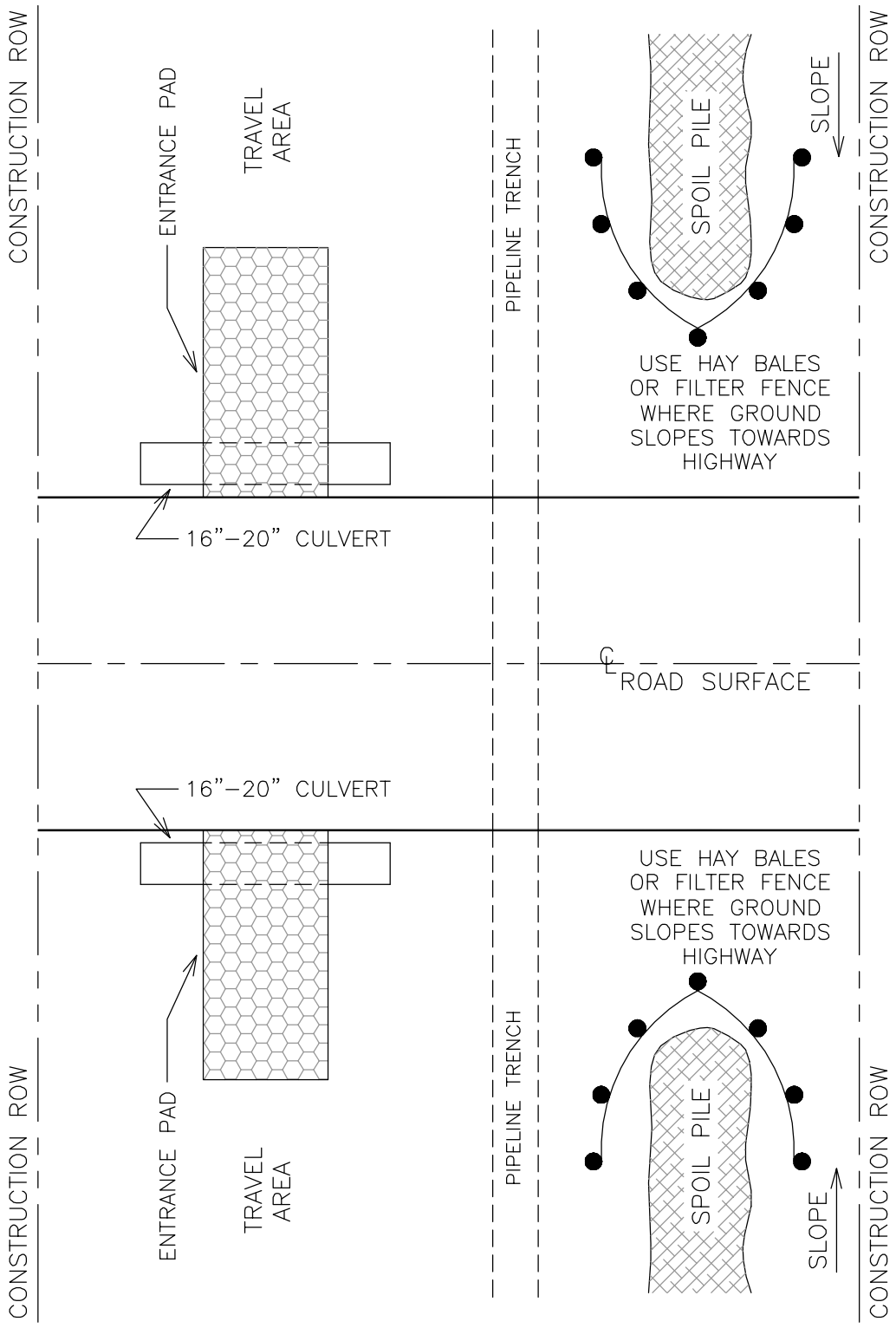


| | | | | |
|---|---|---|---|---|
| Empire Pipeline — A National Fuel Gas Company | ENGINEERING DEPT.<br>1100 STATE STREET<br>P.O. BOX 2081<br>ERIE, PA. 16512<br>(814) 871–8676 | DRAWN BY: L. A. PHILLIPS<br>FILENAME: EPC\BMP10.dwg<br>DATE: 01/14/1997 | ROAD CROSSING<br>(OPEN CUT) | DRAWING NUMBER:<br>10 |

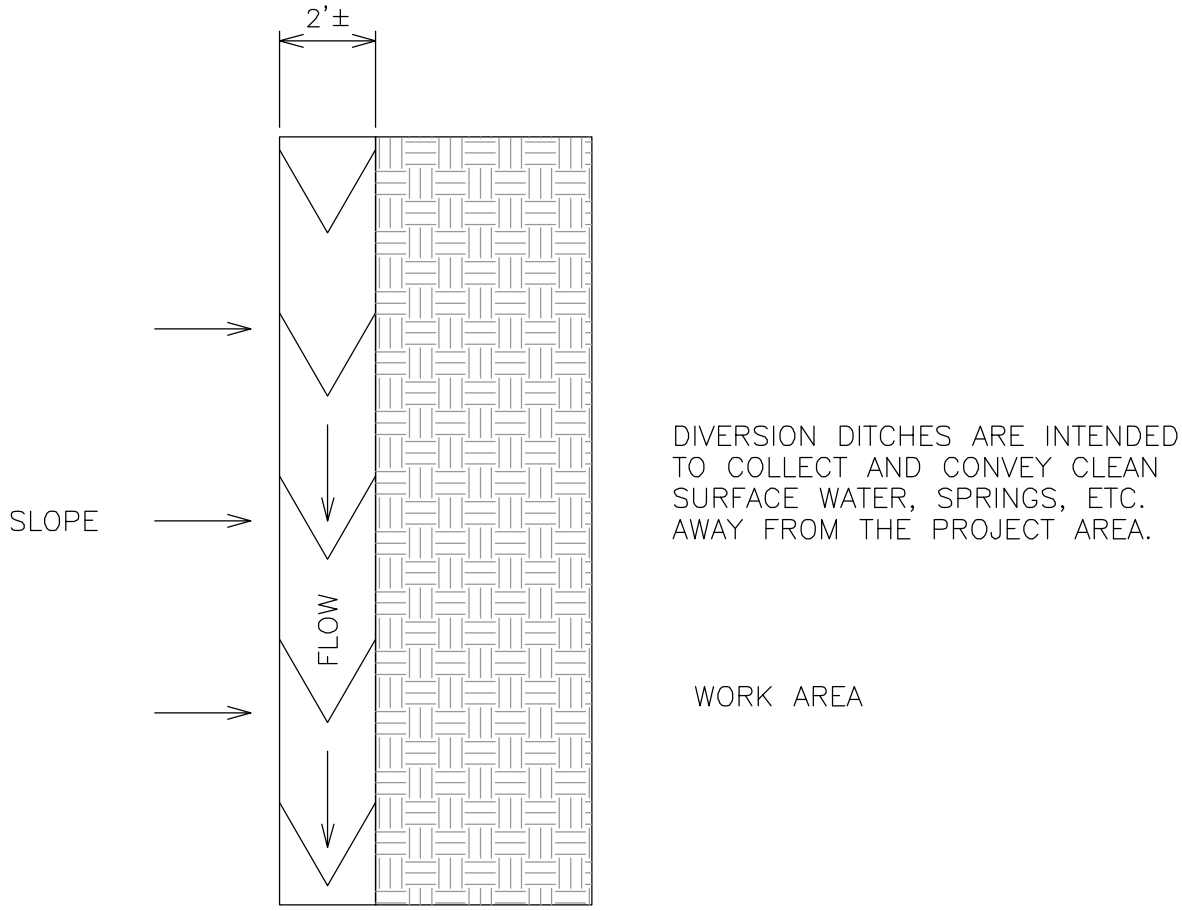


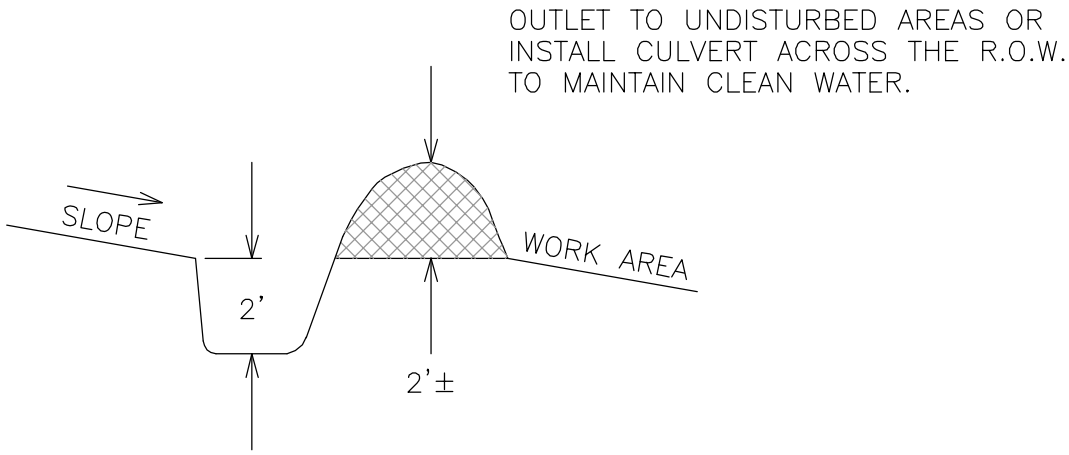


| | | | | |
|---|---|---|---|---|
| Empire Pipeline — A National Fuel Gas Company | ENGINEERING DEPT. 1100 STATE STREET P.O. BOX 2081 ERIE, PA. 16512 (814) 871-8676 | DRAWN BY: L. A. PHILLIPS<br>FILENAME: EPC\BMP11.dwg<br>DATE: 01/08/1997 | DIVERSION DITCH | DRAWING NUMBER: 11 |

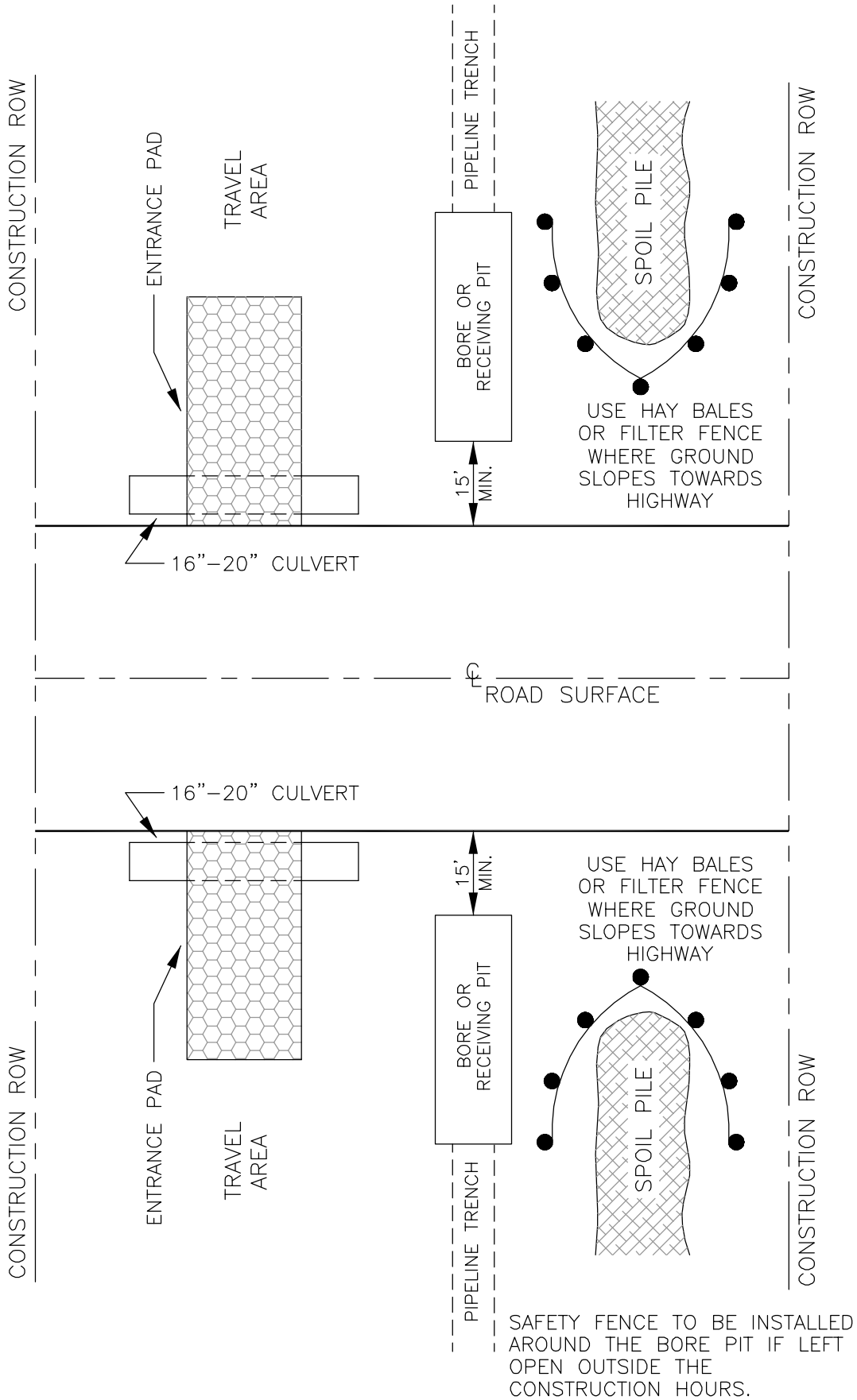


| | | | | |
|---|---|---|---|---|
| Empire Pipeline — A National Fuel Gas Company | ENGINEERING DEPT.<br>1100 STATE STREET<br>P.O. BOX 2081<br>ERIE, PA. 16512<br>(814) 871–8676 | DRAWN BY: L. A. PHILLIPS<br>FILENAME: EPC\BMP12.dwg<br>LAST REVISION DATE: 09/09/2003 | ROAD CROSSING (BORE) | DRAWING NUMBER: 12 |

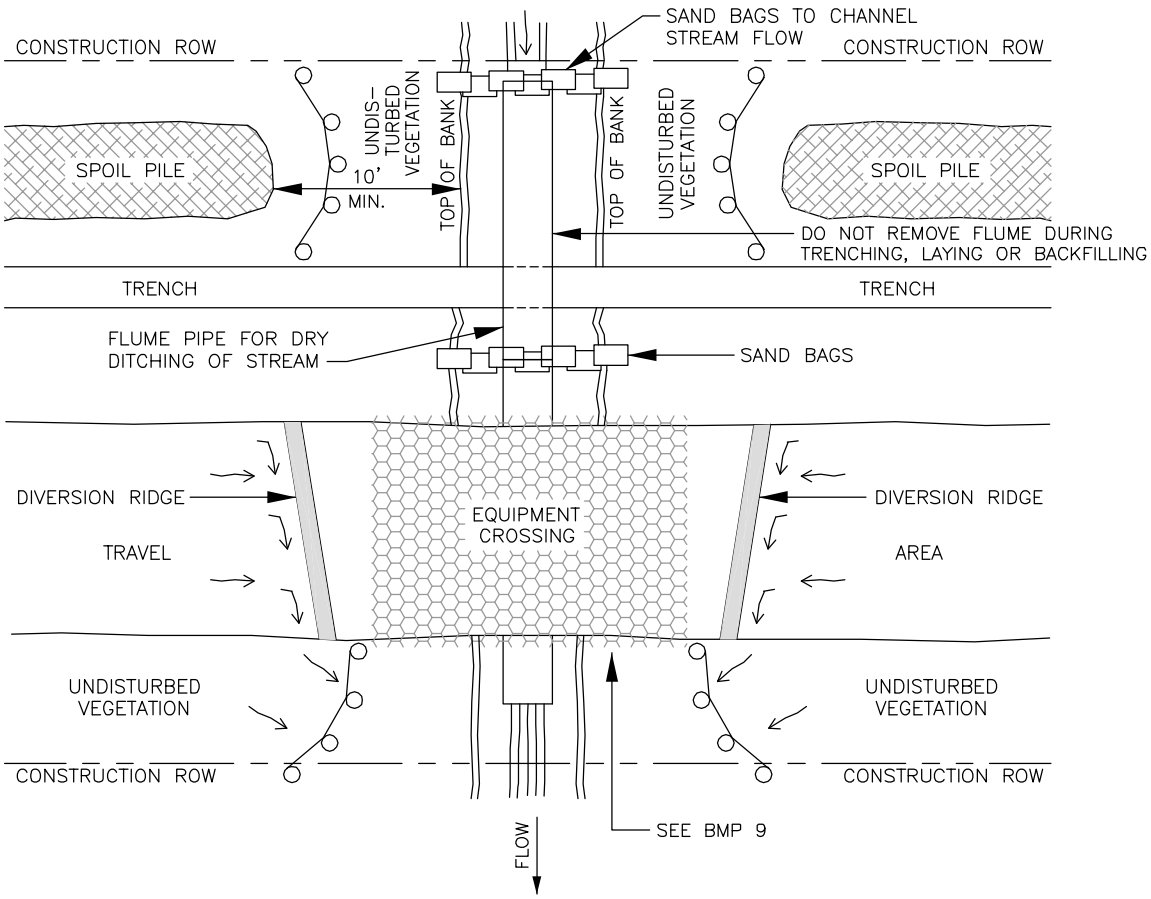


DURING CONSTRUCTION

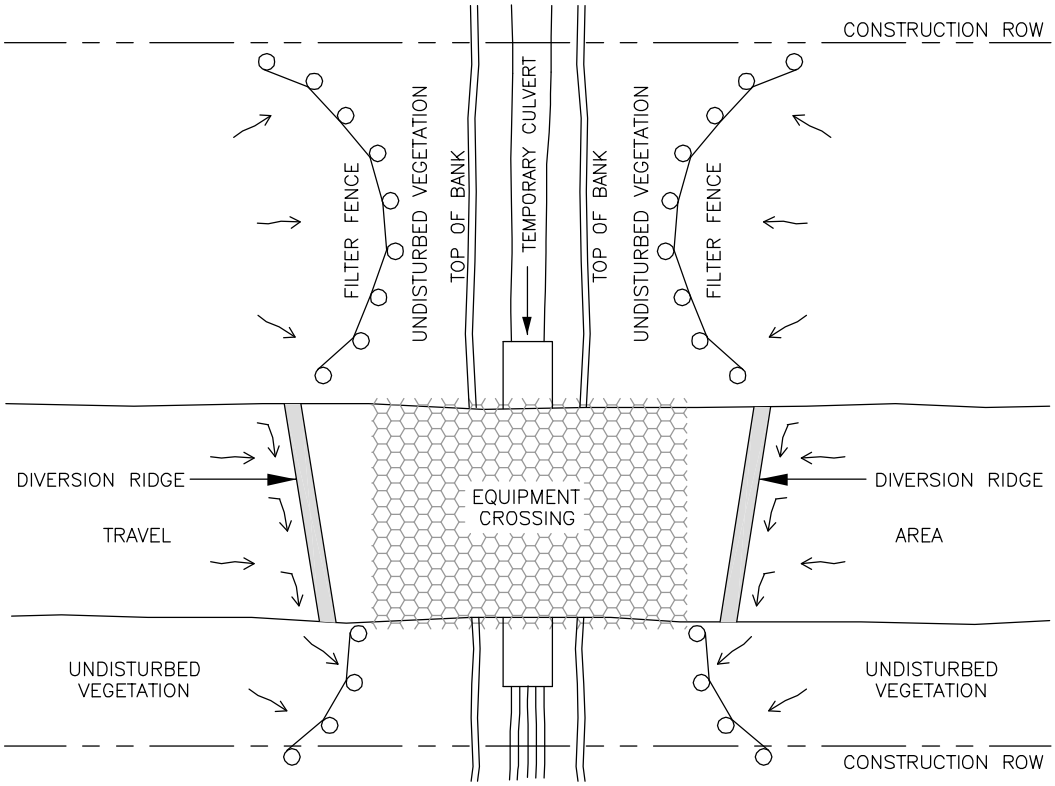


AFTER CONSTRUCTION

NOTE:
DRY–DITCH CROSSING METHODS CAN BE USED FOR WATERBODIES UP TO 30'.

| | | | | |
|---|---|---|---|---|
| Empire Pipeline — A National Fuel Gas Company | ENGINEERING DEPT. 1100 STATE STREET P.O. BOX 2081 ERIE, PA. 16512 (814) 871–8676 | DRAWN BY: DRISCOLL/PHILLIPS<br>FILENAME: EPC\BMP13.dwg<br>LAST REVISION DATE: 09/09/02003 | FLUME (DRY DITCH) STREAM | DRAWING NUMBER: 13 |

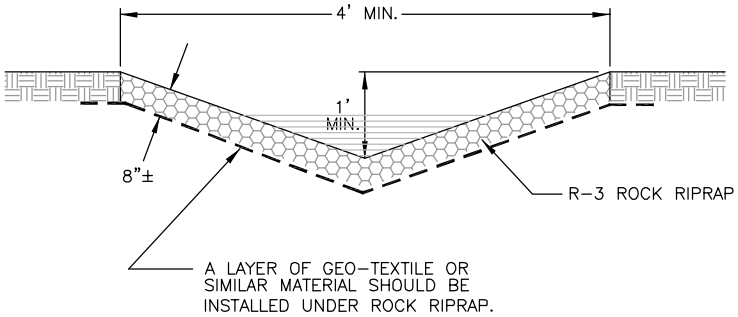


ROCK SIZE (INCHES)
MAX. 6"
AVG. 3"
MIN. 2"

VELOCITY = 6.5'/SEC.
Q = 13 CFS

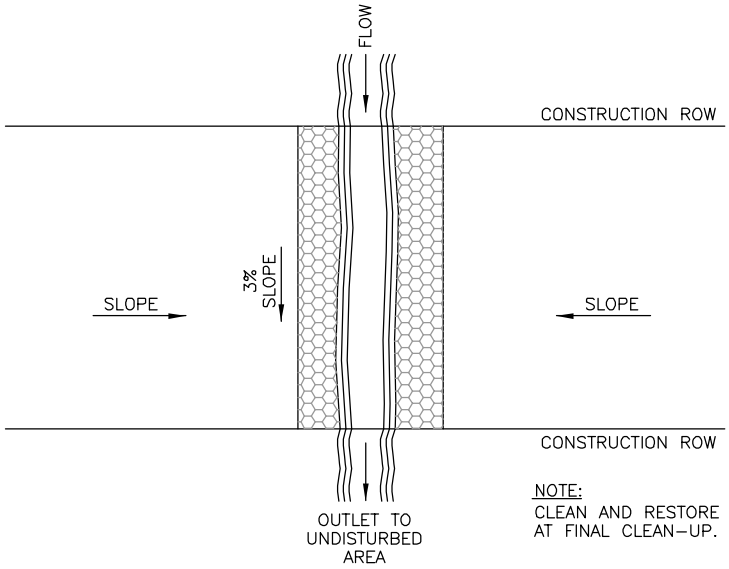


NOTE:
CLEAN AND RESTORE DITCH AT FINAL CLEAN-UP.

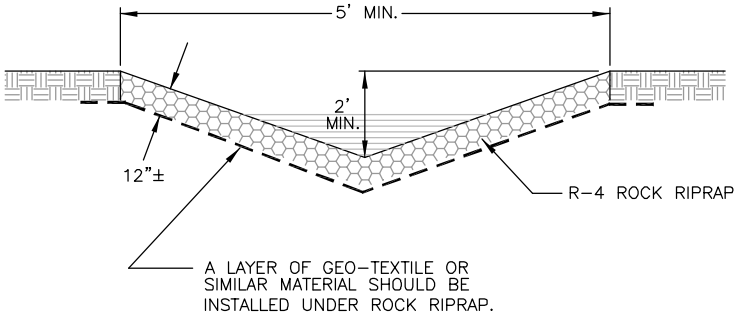


ROCK SIZE (INCHES)
MAX. 12"
AVG. 6"
MIN. 3"

VELOCITY = 8.7'/SEC.
Q = 43 CFS

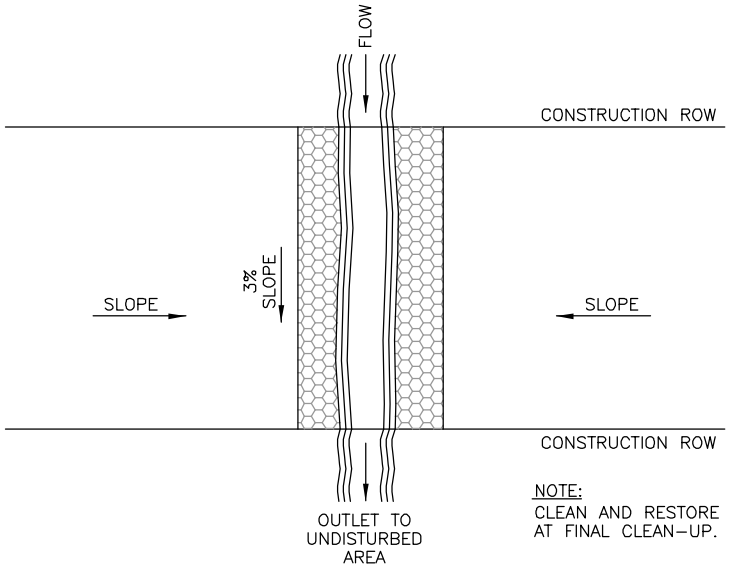


NOTE:
CLEAN AND RESTORE DITCH AT FINAL CLEAN-UP.

| | | | | |
|---|---|---|---|---|
| Empire Pipeline — A National Fuel Gas Company | ENGINEERING DEPT.<br>1100 STATE STREET<br>P.O. BOX 2081<br>ERIE, PA. 16512<br>(814) 871-8676 | DRAWN BY: L. A. PHILLIPS<br>FILENAME: EPC\BMP14.dwg<br>DATE: 01/09/1997 | RUN OFF DITCH | DRAWING NUMBER: 14 |

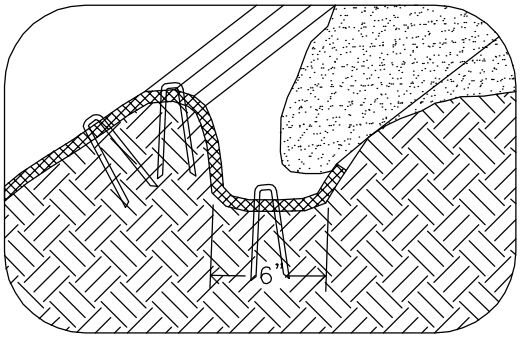


LONGITUDINAL ANCHOR TRENCH

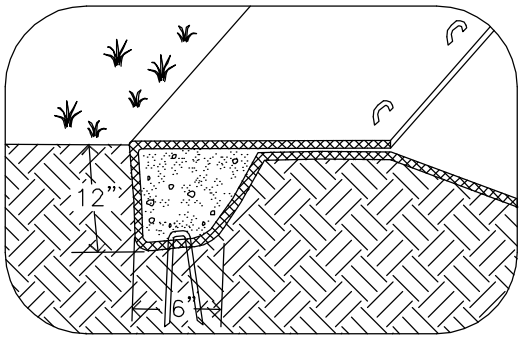


TERMINAL SLOPE AND CHANNEL ANCHOR TRENCH

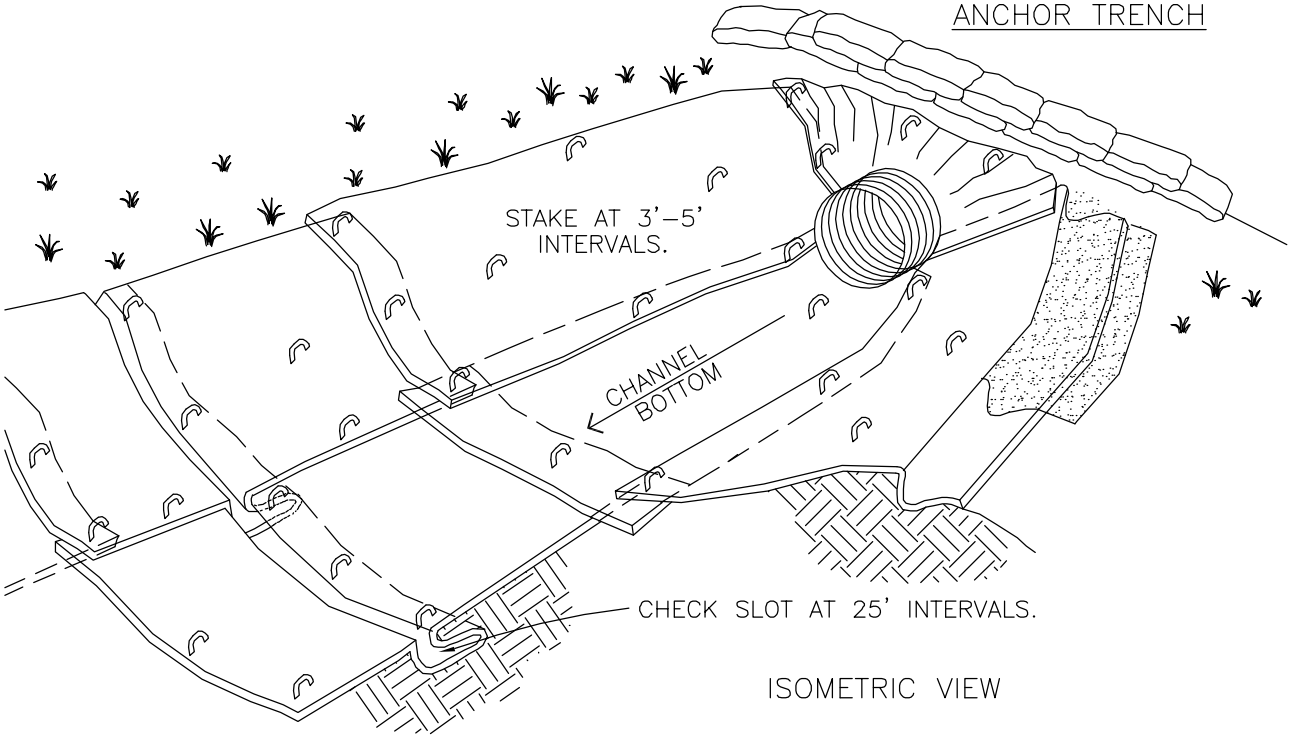


ISOMETRIC VIEW

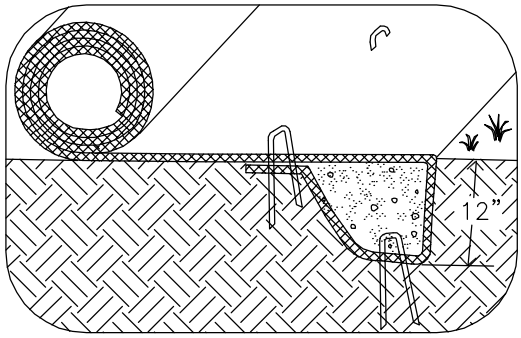


INITIAL CHANNEL ANCHOR TRENCH

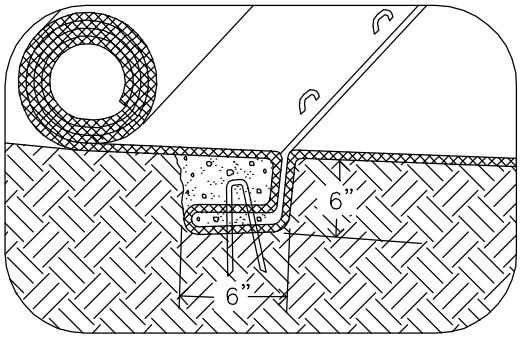


INTERMITTENT CHECK SLOT

NOTES:

1. CHECK SLOTS TO BE CONSTRUCTED PER MANUFACTURERS SPECIFICATIONS.
2. STAKING OR STAPLING LAYOUT PER MANUFACTURERS SPECIFICATIONS.
3. SEE DRAWING NO. 15A FOR INSTALLATION SPECIFICATIONS.

© 1994 JOHN McCULLAH

| | | | | |
|---|---|---|---|---|
| Empire Pipeline<br>A National Fuel Gas Company | ENGINEERING DEPT.<br>1100 STATE STREET<br>P.O. BOX 2081<br>ERIE, PA. 16512<br>(814) 871–8676 | MODIFIED BY: L. A. PHILLIPS<br>FILENAME: NFGSC\BMP15.dwg<br>DATE: 01/09/1997 | EROSION BLANKETS<br>CHANNEL INSTALLATION | DRAWING NUMBER:<br>15 |

CONSTRUCTION SPECIFICATIONS:

SITE PREPARATION

1. PROPER SITE PREPARATION IS ESSENTIAL TO ENSURE COMPLETE CONTACT OF THE PROTECTION MATTING WITH THE SOIL.
2. GRADE AND SHAPE AREA OF INSTALLATION.
3. REMOVE ALL ROCKS, CLODS, VEGETATIVE OR OTHER OBSTRUCTIONS SO THAT THE INSTALLED BLANKETS, OR MATS WILL HAVE DIRECT CONTACT WITH THE SOIL.
4. PREPARE SEEDBED BY LOOSENING 2"–3" OF TOPSOIL ABOVE FINAL GRADE.
5. INCORPORATE AMENDMENTS, SUCH AS LIME AND FERTILIZER, INTO SOIL ACCORDING TO SOIL TEST AND THE SEEDING PLAN.

SEEDING

SEED AREA BEFORE BLANKET INSTALLATION FOR EROSION CONTROL AND RE–VEGETATION OR SEED AFTER MAT INSTALLATION FOR TURF REINFORCEMENT. WHEN SEEDING PRIOR TO BLANKET INSTALLATION, ALL CHECK SLOTS AND OTHER AREAS DISTURBED DURING INSTALLATION MUST BE RESEEDED. WHERE SOIL FILLING IS SPECIFIED, SEED THE MATTING AND THE ENTIRE DISTURBED AREA AFTER INSTALLATION AND PRIOR TO FILLING THE MAT WITH SOIL.

ANCHORING

U–SHAPED WIRE STAPLES, METAL GEOTEXTILE STAKE PINS OR TRIANGULAR WOODEN STAKES CAN BE USED TO ANCHOR MATS TO THE GROUND SURFACE. WIRE STAPLES SHOULD BE A MINIMUM OF 8 GAUGE. METAL STAKE PINS SHOULD BE 3/16" DIAMETER STEEL WITH A 1 1/2" STEEL WASHER AT THE HEAD OF THE PIN. WIRE STAPLES AND METAL STAKE SHOULD BE DRIVEN FLUSH TO THE SOIL SURFACE. WOODEN STAKES SHOULD BE 3" X 1 1/2" TRIANGULAR WOODEN SURVEY STAKES. TWO INCHES OF WOOD STAKING SHOULD REMAIN ABOVE THE SOIL SURFACE. ALL ANCHORS SHOULD BE 8"–18" LONG AND HAVE SUFFICIENT GROUND PENETRATION TO RESIST PULLOUT. LONGER ANCHORS MAY BE REQUIRED FOR LOOSE SOILS.

INSTALLATION IN CHANNELS

1. DIG INITIAL ANCHOR TRENCH 12" DEEP AND 6" WIDE ACROSS THE CHANNEL AT THE LOWER END OF THE PROJECT AREA.
2. EXCAVATE INTERMITTENT CHECK SLOTS, 6" DEEP AND 6" WIDE ACROSS THE CHANNEL AT 25' TO 30' INTERVALS ALONG THE CHANNEL.
3. CUT LONGITUDINAL CHANNEL ANCHOR SLOTS 4" DEEP AND 4" WIDE ALONG EACH SIDE OF THE INSTALLATION TO BURY EDGES OF MATTING, WHENEVER POSSIBLE EXTEND MATTING 2 – 3 ABOVE THE CREST OF CHANNEL SIDE SLOPES.
4. BEGINNING AT THE DOWNSTREAM END AND IN THE CENTER OF THE CHANNEL, PLACE THE INITIAL END OF THE FIRST ROLL IN THE ANCHOR TRENCH AND SECURE WITH FASTENING DEVICES AT 1' INTERVALS. NOTE: MATTING WILL INITIALLY BE UPSIDE DOWN IN ANCHOR TRENCH.
5. IN SAME MANNER, POSITION ADJACENT ROLLS IN ANCHOR TRENCH, OVERLAPPING THE PRECEDING ROLL A MINIMUM OF 3".
6. SECURE THESE INITIAL ENDS OF MATS WITH ANCHORS AT 1' INTERVALS, BACKFILL AND COMPACT SOIL.
7. UNROLL CENTER STRIP OF MATTING UPSTREAM. STOP AT NEXT CHECK SLOT OR TERMINAL ANCHOR TRENCH.
8. UNROLL ADJACENT MATS UPSTREAM IN SIMILAR FASHION, MAINTAINING 3" OVERLAP.
9. FOLD AND SECURE ALL ROLLS OF MATTING SNUGLY INTO ALL TRANSVERSE CHECK SLOTS. LAY MAT IN THE BOTTOM OF THE SLOT THEN FOLD BACK AGAINST ITSELF. ANCHOR THROUGH BOTH LAYERS OF MAT AT 1 INTERVALS THEN BACKFILL AND COMPACT SOIL. CONTINUE ROLLING ALL MAT WIDTHS UPSTREAM TO THE NEXT CHECK SLOT OR TERMINAL ANCHOR TRENCH.
10. ALTERNATE METHOD FOR NONCRITICAL INSTALLATIONS: PLACE TWO ROWS OF ANCHORS ON 6 CENTERS AT 25' TO 30' INTERVALS IN LIEU OF EXCAVATED CHECK SLOTS.
11. SHINGLE–LAP SPLICED ENDS BY A MINIMUM OF 1' WITH UPSTREAM MAT ON TOP TO PREVENT UPLIFTING BY WATER OR BEGIN NEW ROLLS IN A CHECK SLOT. ANCHOR OVERLAPPED AREA BY PLACING TWO ROWS OF ANCHORS, 1' APART ON 1' INTERVALS.
12. PLACE EDGES OF OUTSIDE MATS IN PREVIOUSLY EXCAVATED LONGITUDINAL SLOTS, ANCHOR USING PRESCRIBED STAPLE PATTERN, BACKFILL AND COMPACT SOIL.
13. ANCHOR, FILL AND COMPACT UPSTREAM END OF MAT IN A 12" X 6" TERMINAL TRENCH.
14. SECURE MAT TO GROUND SURFACE USING U–SHAPED WIRE STAPLES GEOTEXTILE PINS OR WOODEN STAKES.
15. SEED AND FILL TURF REINFORCEMENT MATTING WITH SOIL, IF SPECIFIED.

SOIL FILLING IF SPECIFIED FOR TURF REINFORCEMENT.

1. AFTER SEEDING, SPREAD AND LIGHTLY RAKE 1/2" – 3/4" OF FINE TOPSOIL INTO THE MAT APERTURES TO COMPLETELY FILL MAT THICKNESS.
2. USE BACKSIDE OF RAKE OR OTHER FLAT IMPLEMENT.
3. SPREAD TOPSOIL USING LIGHTWEIGHT LOADER, BACKHOE, OR OTHER POWER EQUIPMENT. AVOID SHARP TURNS WITH EQUIPMENT.
4. DO NOT DRIVE TRACKED OR HEAVY EQUIPMENT OVER MAT.
5. AVOID ANY TRAFFIC OVER MATTING IF LOOSE OR WET SOIL CONDITIONS EXIST.
6. USE SHOVELS, RAKES OR BROOMS FOR FINE GRADING AND TOUCH UP.
7. SMOOTH OUT SOIL FILLING JUST EXPOSING TOP NETTING OF MATRIX.

INSPECTION AND MAINTENANCE

1. ALL BLANKET AND MATS SHOULD BE INSPECTED PERIODICALLY FOLLOWING INSTALLATION.
2. INSPECT INSTALLATION AFTER SIGNIFICANT RAINSTORMS TO CHECK FOR EROSION AND UNDERMINING. ANY FAILURE SHOULD BE REPAIRED IMMEDIATELY.
3. IF WASHOUT OR BREAKAGE OCCURS, RE–INSTALL THE MATERIAL AFTER REPAIRING THE DAMAGE TO THE SLOPE OR DRAINAGEWAY.

© 1994 JOHN McCULLAH

| | | | | |
|---|---|---|---|---|
| Empire Pipeline<br>A National Fuel Gas Company | ENGINEERING DEPT.<br>1100 STATE STREET<br>P.O. BOX 2081<br>ERIE, PA. 16512<br>(814) 871–8676 | MODIFIED BY: L. A. PHILLIPS<br>FILENAME: NFGSC\BMP15A.dwg<br>DATE: 01/09/1997 | SPECIFICATIONS<br>EROSION BLANKETS<br>CHANNEL INSTALLATION | DRAWING NUMBER:<br>15A |

## WIDE CHANNELS

END POINTS "A" MUST BE HIGHER THAN FLOW LINE POINT "B"

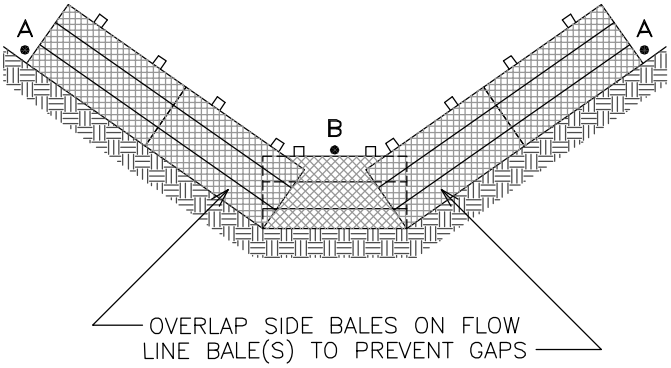


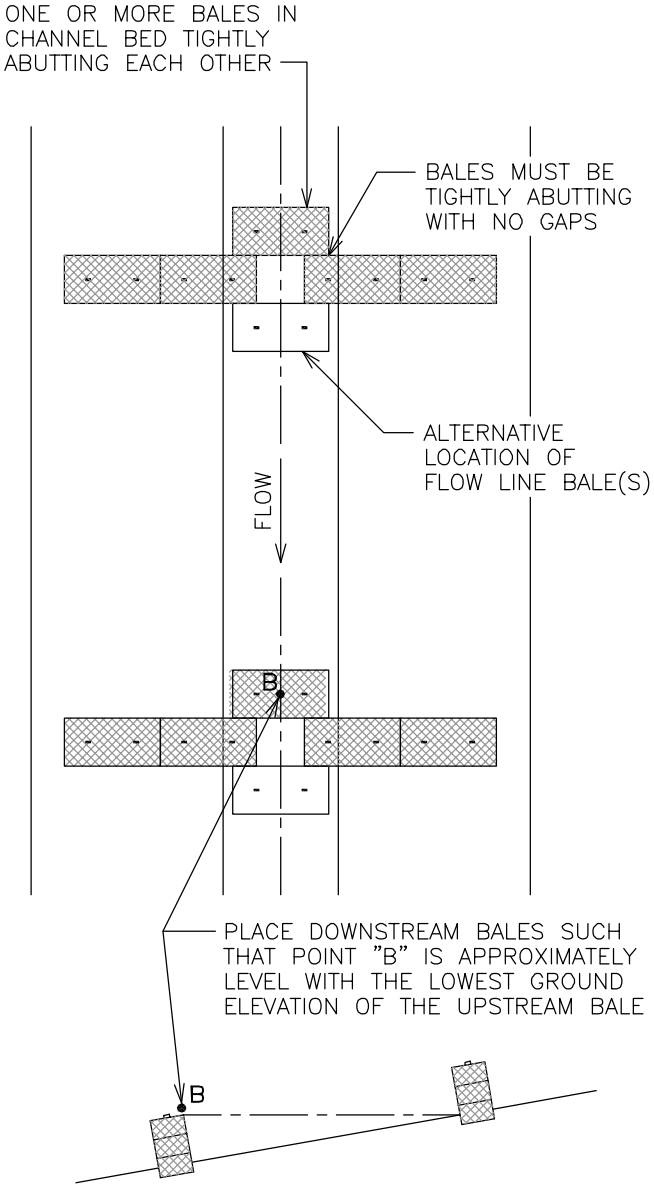


## NARROW CHANNELS

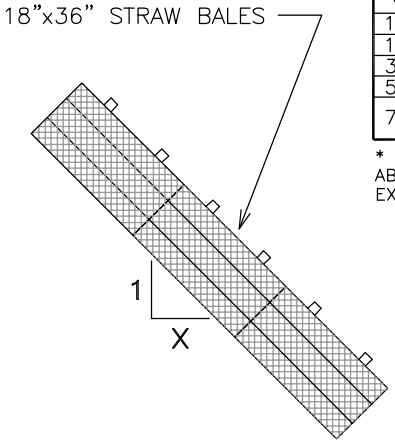


| VALUE OF "X" | MINIMUM NUMBER OF BALES |
|---|---|
| 10 OR < | 1* |
| 10 – 35 | 2* |
| 35 – 50 | 3* |
| 50 – 70 | 4* |
| 70 OR > | NOT RECOMMENDED |

* ASSUMES DEPTH OF WATER ABOVE POINT "B" WILL NOT EXCEED 6"

END POINTS "A" MUST BE HIGHER THAN FLOW LINE POINT "B"

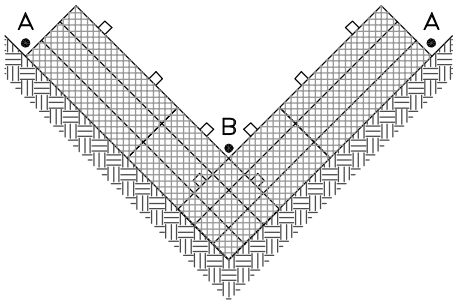


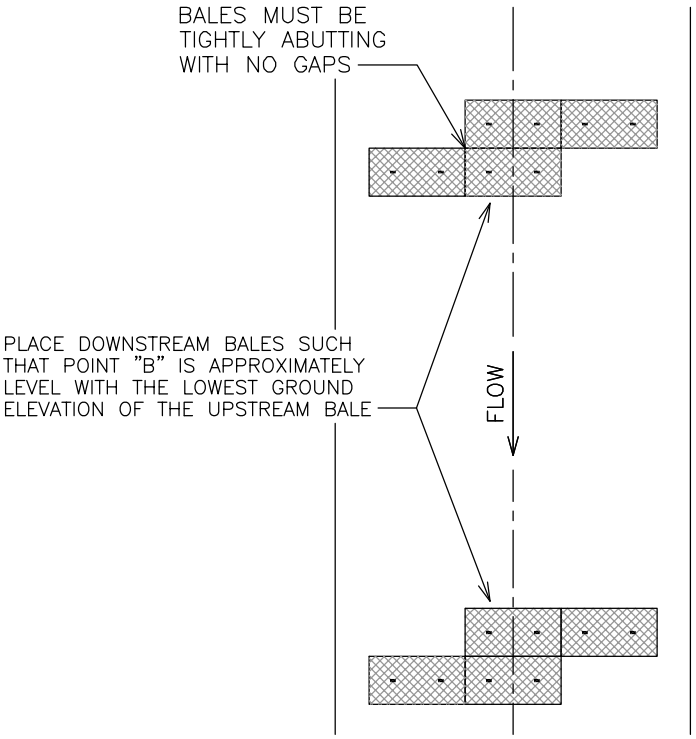


| | | | |
|---|---|---|---|
| Empire Pipeline — A National Fuel Gas Company | ENGINEERING DEPT. 1100 STATE STREET P.O. BOX 2081 ERIE, PA. 16512 (814) 871–8676 | DRAWN BY: L. A. PHILLIPS<br>FILENAME: EPC\BMP16.dwg<br>DATE: 01/14/1997 | STRAW BALE DROP STRUCTURES FOR DRAINAGE CHANNELS | DRAWING NUMBER: 16 |

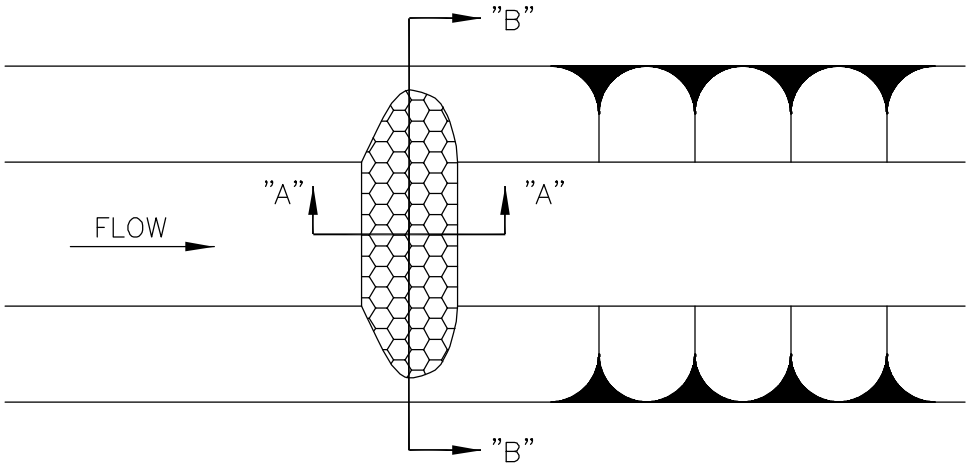


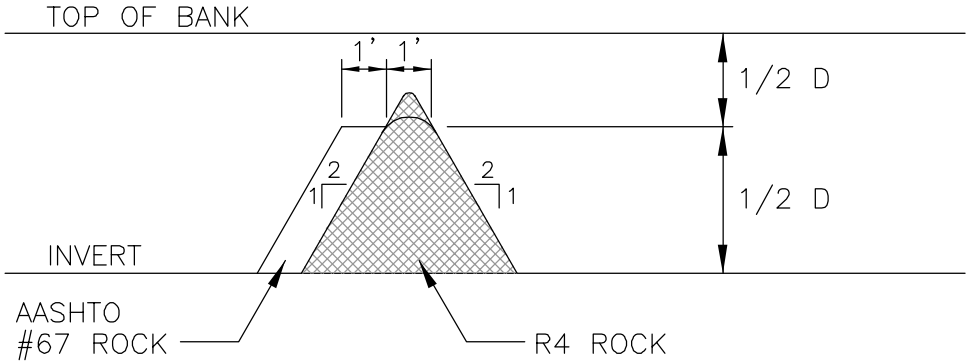


D=DEPTH OF WATER
AT CHANNEL CAPACITY

SECTION "A–A"

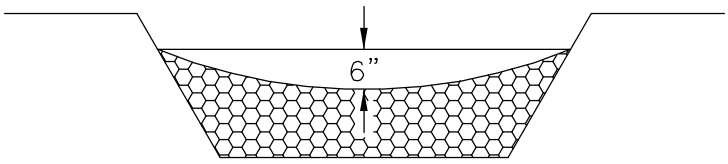


SECTION "B–B"

1. ROCK FILTERS WILL BE CONSTRUCTED WITH AASHTO NUMBER 67 AND R–4 ROCK AS SPECIFIED IN SECTIONS 703.2 AND 850.2 OF PENNDOT'S PUBLICATION 408.
2. FREE STANDING ROCK CHANNEL FILTERS WILL BE CONSTRUCTED TO THE DIMENSIONS SHOWN ABOVE.
3. MAINTENANCE: ROCK FILTERS WILL BE REMOVED WHEN CLOGGED WITH SEDIMENTS. MATERIALS MUST BE WASHED COMPLETELY FREE OF ALL FOREIGN MATERIALS OR NEW ROCK USED TO REBUILD THE FILTER.

| | | | | |
|---|---|---|---|---|
| Empire Pipeline<br>A National Fuel Gas Company | ENGINEERING DEPT.<br>1100 STATE STREET<br>P.O. BOX 2081<br>ERIE, PA. 16512<br>(814) 871–8676 | DRAWN BY: L. A. PHILLIPS<br>FILENAME: EPC\BMP17.dwg<br>DATE: 01/10/1997 | ROCK CHANNEL FILTER | DRAWING NUMBER:<br>17 |

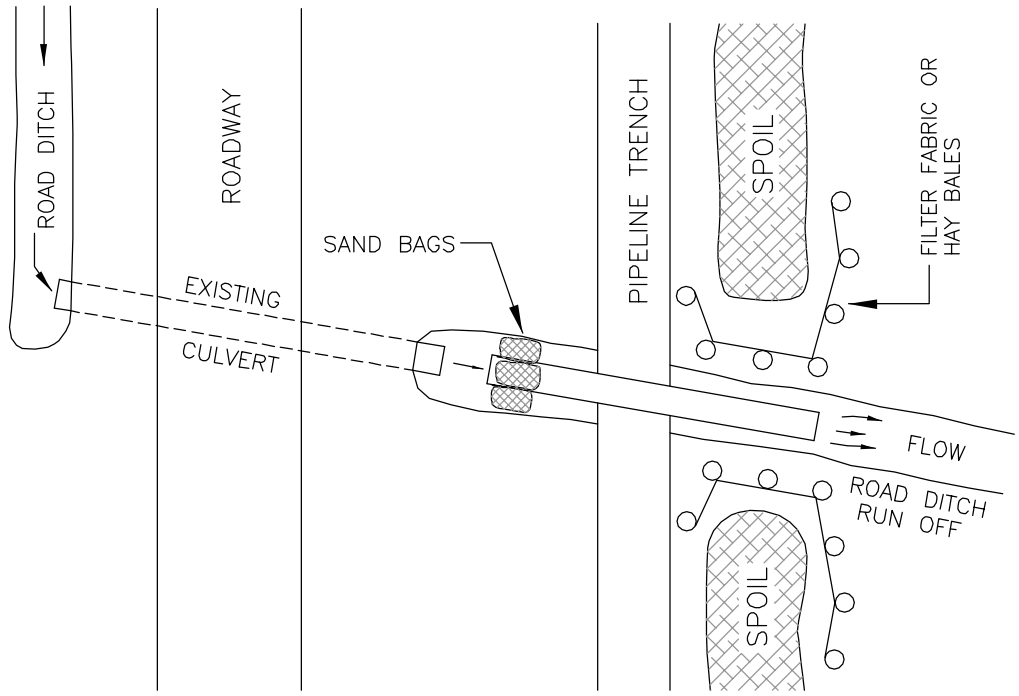


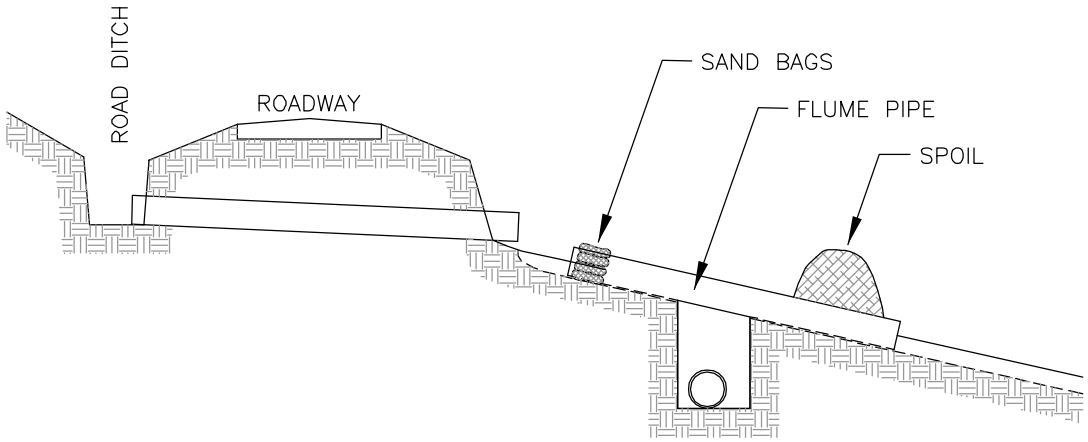


NOTES:

1. INSTALL TEMPORARY CULVERT ACROSS PIPELINE TRENCH AT ROAD CULVERT LOCATIONS WHERE PIPELINE TRENCH IS LOCATED BELOW ROAD SURFACE. AN 8" MINIMUM DIAMETER CULVERT IS TO BE INSTALLED.

2. REMOVE CULVERT WHEN BACK FILLING AND RESTORE ROAD DITCH RUN OFF TO ORIGINAL CONDITION.

| | | | | |
|---|---|---|---|---|
| Empire Pipeline<br>A National Fuel Gas Company | ENGINEERING DEPT.<br>1100 STATE STREET<br>P.O. BOX 2081<br>ERIE, PA. 16512<br>(814) 871-8676 | DRAWN BY: L. A. PHILLIPS<br>FILENAME: EPC\BMP18.dwg<br>LAST REVISION DATE: 09/09/2003 | ROAD CULVERT EXTENSION ACROSS PIPELINE TRENCH | DRAWING NUMBER: 18 |

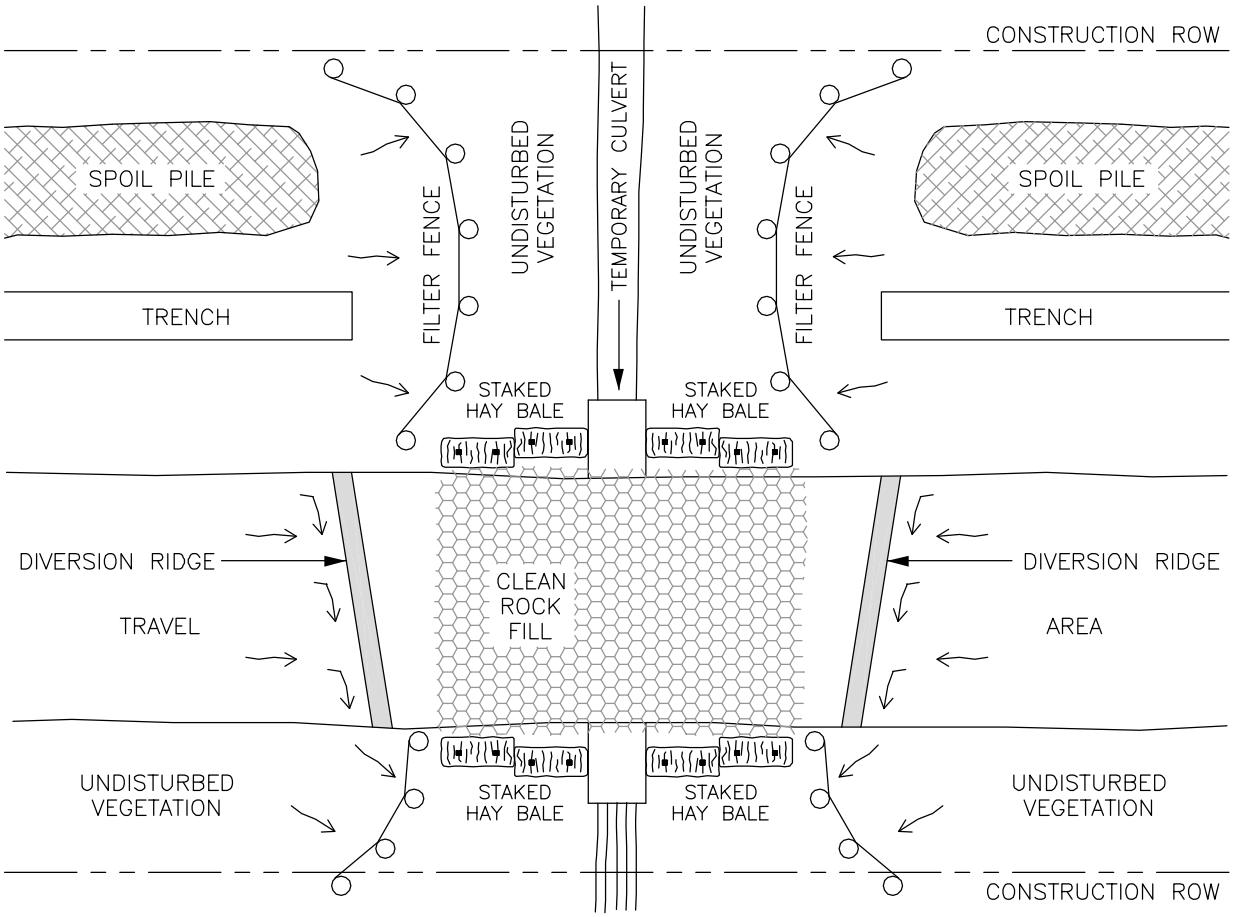


WITH 36" H.W. INLET CONTROL

12" PIPE = 5 CFS
16" PIPE = 9 CFS
1 – 20" PIPE = 13 CFS
2 – 20" PIPE = 26 CFS
3 – 20" PIPE = 39 CFS

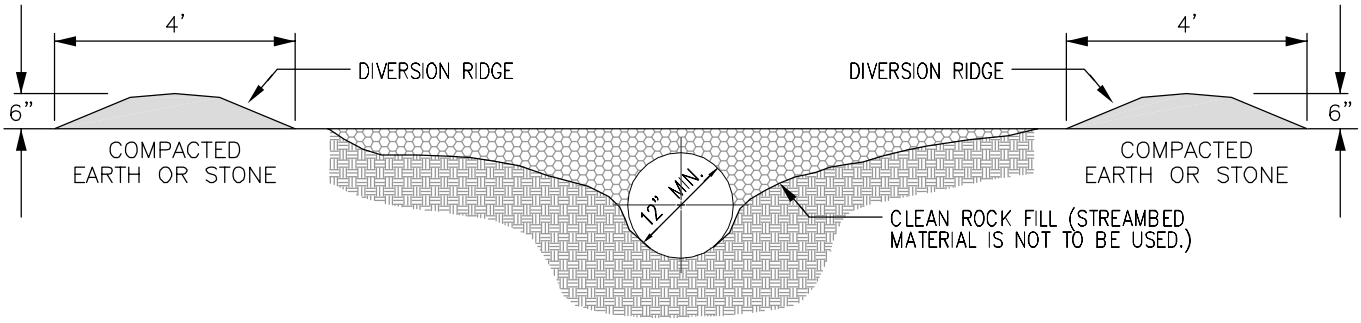


1. TEMPORARY CULVERT SHOULD EXTEND BEYOND TOE OF ROAD.
2. ROADWAY SHOULD BE DEPRESSED OVER CULVERT TO ALLOW FOR OVERFLOW.
3. CLEAN ROCK FILL SHALL BE USED TO GUARD AGAINST EROSION AND SEDIMENTATION. STREAMBED MATERIAL IS NOT TO BE USED.
4. INSTALL FILTER FENCE ACROSS THE DISTURBED AREAS OF THE R.O.W.
5. INSTALL STAKED HAY BALES ALONG TRAVEL AREA ON EACH SIDE OF CULVERT OPENING, TO CONTROL MUD FROM CONSTRUCTION TRAFFIC. THESE AREAS ARE TO BE CLEANED PERIODICALLY DURING CONSTRUCTION. DO NOT INSTALL HAY BALES IN WATERWAY.
6. DURING FINAL CLEAN UP WHEN CULVERT, CLEAN ROCK FILL, ETC. ARE REMOVED, INSTALL FILTER FENCE ACROSS THE ENTIRE R.O.W. ON BOTH SIDES OF STREAM.
7. LOCATE ALL SPOIL A MINIMUM OF 10 FEET FROM THE WATERS EDGE.

| | | | | |
|---|---|---|---|---|
| Empire Pipeline<br>A National Fuel Gas Company | ENGINEERING DEPT.<br>1100 STATE STREET<br>P.O. BOX 2081<br>ERIE, PA. 16512<br>(814) 871–8676 | DRAWN BY: DRISCOLL/PHILLIPS<br>FILENAME: EPC\BMP19.dwg<br>DATE: 05/18/2000 | TEMPORARY CULVERT WITH CLEAN ROCK FILL | DRAWING NUMBER: 19 |

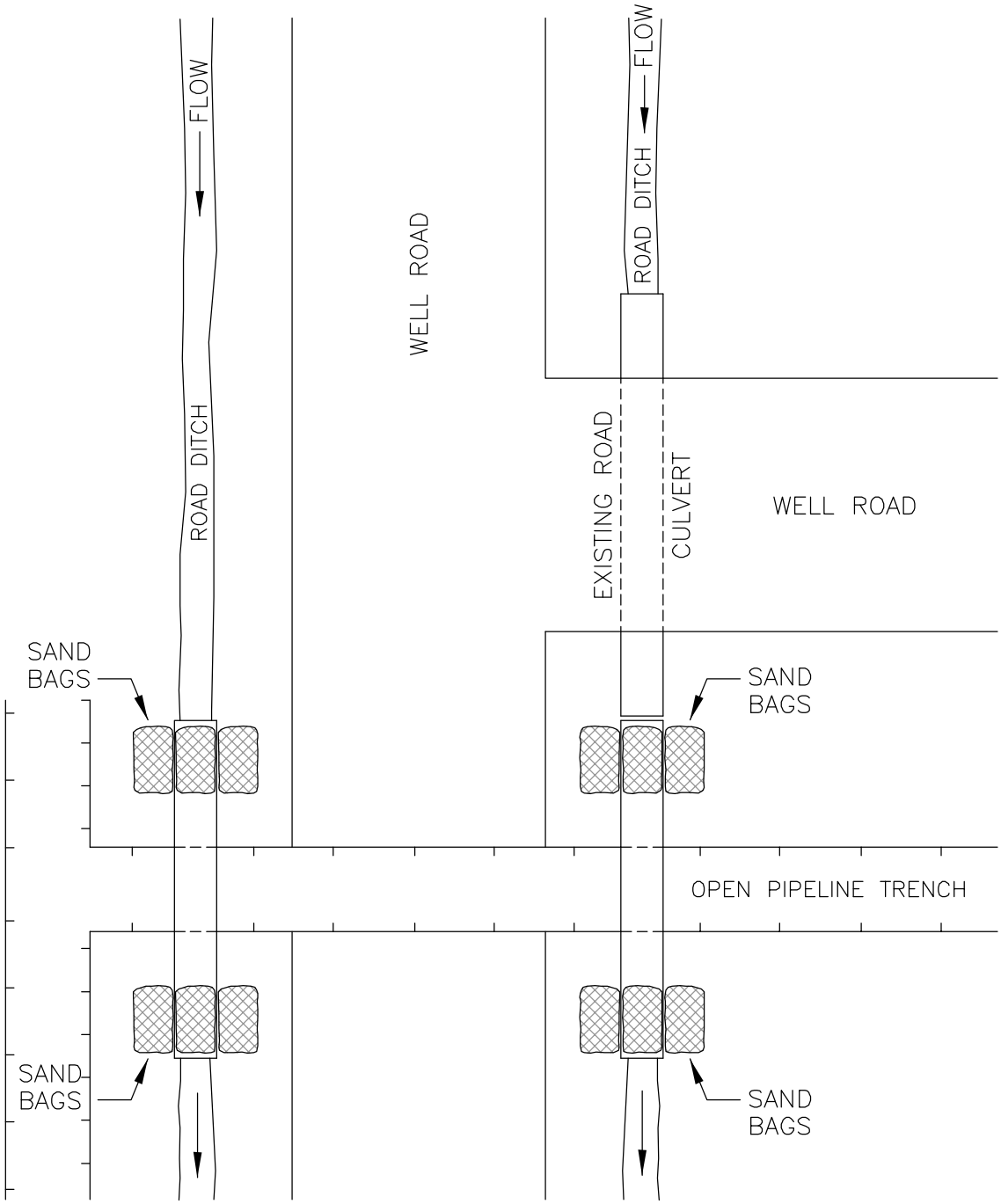


NOTES:

1. INSTALL TEMPORARY CULVERT IN ROAD DITCH, ACROSS OPEN PIPELINE TRENCH. AN 8" MINIMUM DIAMETER CULVERT IS TO BE INSTALLED.

2. REMOVE CULVERT WHEN BACK FILLING AND RESTORE ROAD DITCH TO ORIGINAL CONDITION.

| | | | | |
|---|---|---|---|---|
| Empire Pipeline<br>A National Fuel Gas Company | ENGINEERING DEPT.<br>1100 STATE STREET<br>P.O. BOX 2081<br>ERIE, PA. 16512<br>(814) 871-8676 | DRAWN BY: L. A. PHILLIPS<br>FILENAME: EPC\BMP20.dwg<br>DATE: 01/10/1997 | TEMPORARY CULVERT ACROSS OPEN TRENCH | DRAWING NUMBER: 20 |

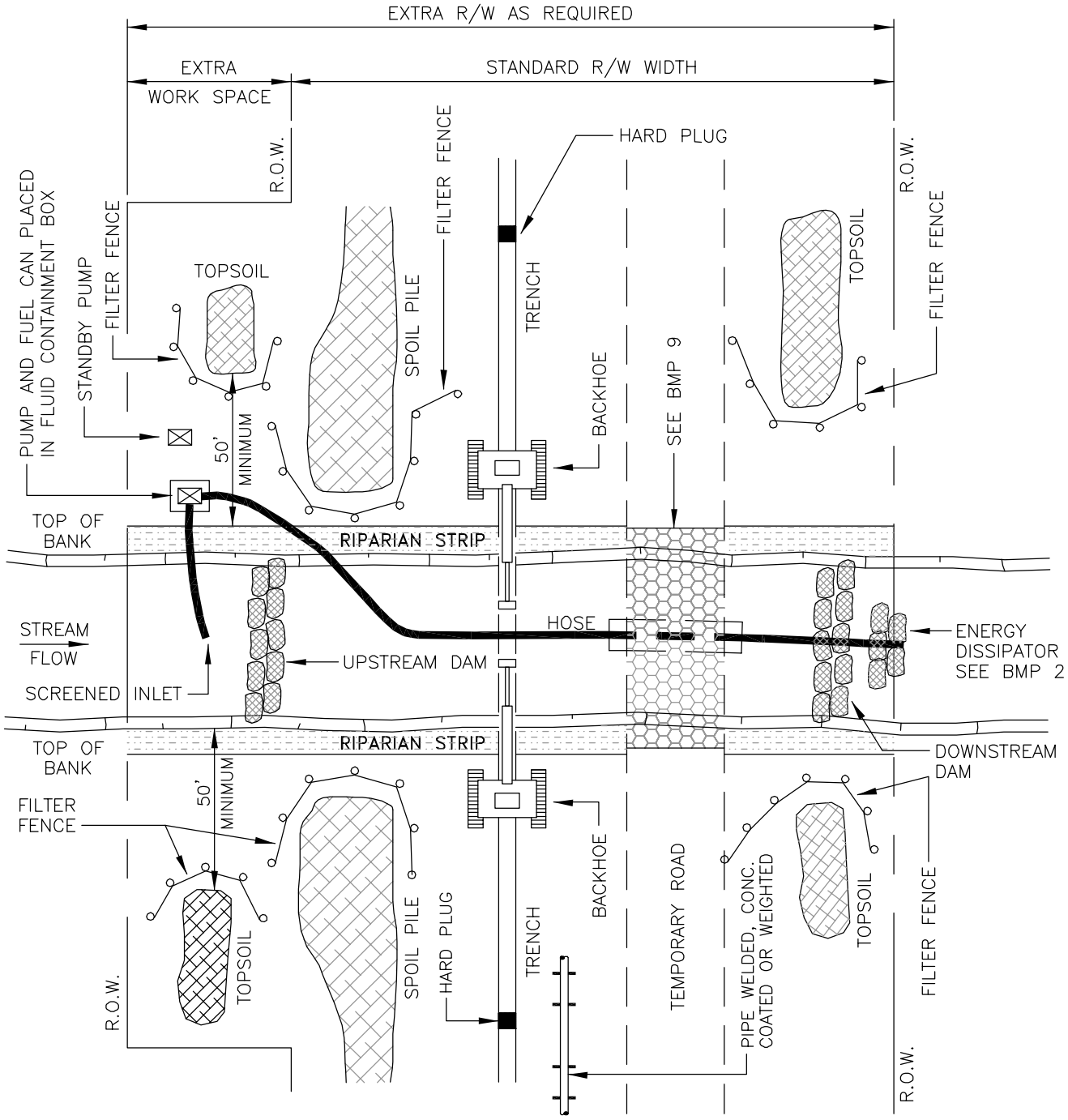


NOTES:

1. GENERALLY DAM AND PUMP METHOD USED ON NARROW WATERCOURSES WITH LIMITED STREAM FLOW TO PREVENT SEDIMENTATION AND INTERRUPTION OF STREAM FLOW DURING CROSSING CONSTRUCTION.
2. SCHEDULE CONSTRUCTION DURING LOW FLOW PERIOD.
3. SET UP PUMP AND HOSE AS SHOWN, OR USE OTHER PRACTICAL ALTERNATIVES. PUMP SHOULD HAVE TWICE THE PUMPING CAPACITY OF ANTICIPATED FLOW. HAVE STANDBY PUMP ON SITE.
4. INSTALL UPSTREAM DAM COMPOSED OF SANDBAGS OR CLEAN GRAVEL WITH PLASTIC LINER. INSTALL DOWNSTREAM DAM IF REQUIRED TO KEEP STREAM BED DRY.
5. EXCAVATE TRENCH AND LOWER IN PIPE UNDER HOSE. MOVE HOSE AS REQUIRED OR DISCONNECT IF TEMPORARY FLOW BLOCKAGE IS ACCEPTABLE. BACKFILL TRENCH.
6. DISMANTLE DOWNSTREAM DAM, THEN UPSTREAM DAM. KEEP PUMP RUNNING TO MAINTAIN FLOW.
7. LOCATE ALL SPOIL A MINIMUM OF 10 FEET FROM THE WATERS EDGE.
8. MONITOR DAM AND PUMP FOR PROPER OPERATION THROUGHOUT THE CROSSING INSTALLATION.

| | | | | |
|---|---|---|---|---|
| Empire Pipeline<br>A National Fuel Gas Company | ENGINEERING DEPT.<br>1100 STATE STREET<br>P.O. BOX 2081<br>ERIE, PA. 16512<br>(814) 871-8676 | DRAWN BY: L. A. PHILLIPS<br>FILENAME: EMP\BMP21.dwg<br>LAST REVISION DATE: 09/09/2003 | DAM AND PUMP - STREAM CROSSING | DRAWING NUMBER: 21 |

## DESIGN RESTRICTIONS:

1. THE FORMATION OF CONCENTRATED FLOWS ON THE UPSLOPE DRAINAGE AREA IS NOT PERMITTED. IF CONCENTRATED FLOWS DO DEVELOP, DIRECT STABILIZATION MEASURES MUST BE EMPLOYED TO PREVENT SUCH CONDITIONS.
2. STRAW BALE BARRIERS MAY NOT BE PLACED IN ANY AREA OF CONCENTRATED FLOWS SUCH AS STREAMS, CHANNELS, DITCHES, SWALES, ETC.
3. STRAW BALE BARRIERS WILL NOT BE USED IN AREAS WHERE ROCK PREVENTS THE FULL AND UNIFORM DEPTH ANCHORING OF THE BARRIER.
4. STRAW BALE BARRIERS WILL BE REPLACED EVERY THREE (3) MONTHS OR MORE OFTEN IF THE BALES DETERIORATE AND BECOME INEFFECTIVE.

## INSTALLATION:

1. THE ANCHORING TRENCH WILL BE CONSTRUCTED TO THE REQUIRED GRADE AND DEPTH AS SHOWN.
2. SUPPORT STAKES WILL BE DRIVEN TO THE REQUIRED DEPTH AS SHOWN.
3. THE ANCHORING TRENCH WILL BE BACKFILLED AND COMPACTED TO A DENSITY EQUAL TO UNDISTURBED SITE SOILS.

1. EXCAVATE ANCHORING TRENCH

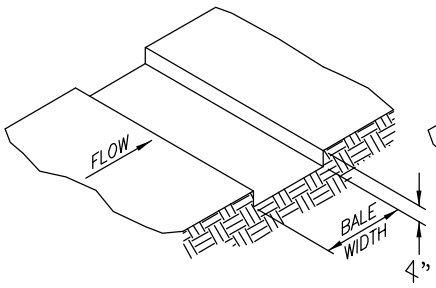


2. PLACE AND STAKE STRAW BALES

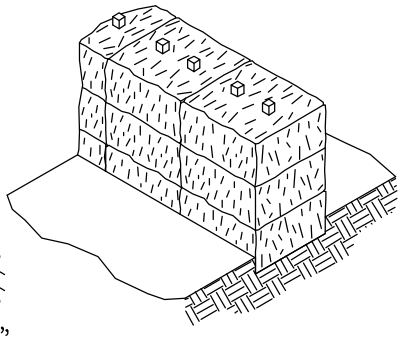

3. WEDGE LOOSE STRAW BETWEEN BALES

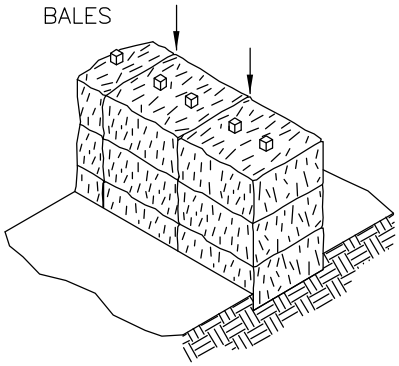

4. BACKFILL AND COMPACT THE EXCAVATED SOIL (ANCHOR TOE)

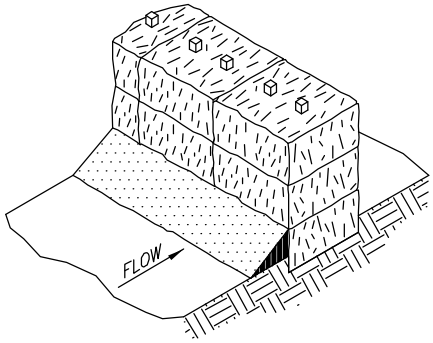


CROSS–SECTION OF STRAW BALE BARRIER

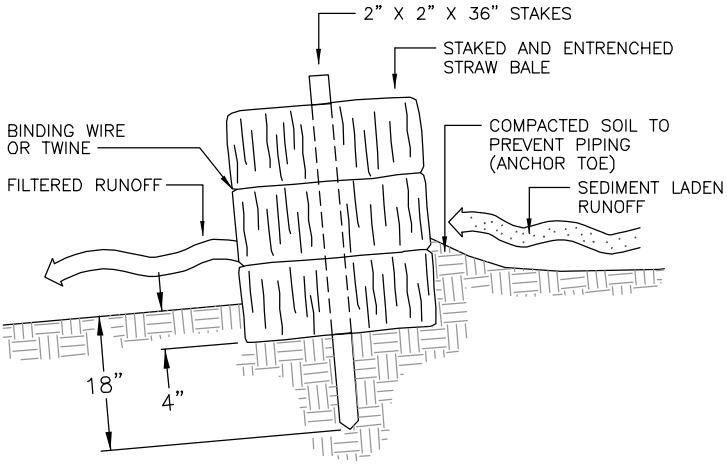


## MAINTENANCE:

1. THE BARRIER WILL BE INSPECTED AFTER EVERY RUNOFF EVENT. DISLODGED BALES SHOULD BE RESET, STAKED AND BACKFILLED TO THE REQUIREMENTS LISTED UNDER "INSTALLATION". ALL CLOGGED OR INOPERATIVE BALES WILL BE REPLACED.
2. ACCUMULATED SEDIMENTS WILL BE REMOVED AS REQUIRED AND IN ALL CASES WHERE UNIFORM ACCUMULATIONS REACH 1/3 THE ABOVE GROUND HEIGHT OF THE BARRIER.
3. ALL UNDERCUTTING OR EROSION OF THE ANCHOR TOE WILL BE REPAIRED IMMEDIATELY WITH COMPACTED BACKFILL MATERIALS.

| | | | | |
|---|---|---|---|---|
| Empire Pipeline<br>A National Fuel Gas Company | ENGINEERING DEPT.<br>1100 STATE STREET<br>P.O. BOX 2081<br>ERIE, PA. 16512<br>(814) 871–8676 | DRAWN BY: L. A. PHILLIPS<br>FILENAME: EPC\BMP22.dwg<br>DATE: 03/10/2000 | STRAW BALE INSTALLATION | DRAWING NUMBER:<br>22 |

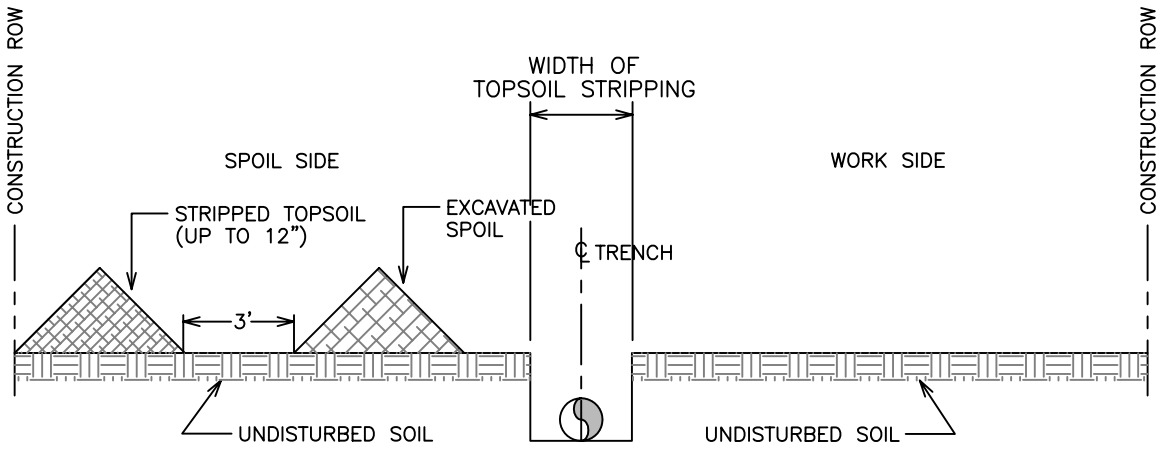


## DITCH LINE TOPSOIL STRIPPING

ALSO USED IN NON–SATURATED WETLANDS

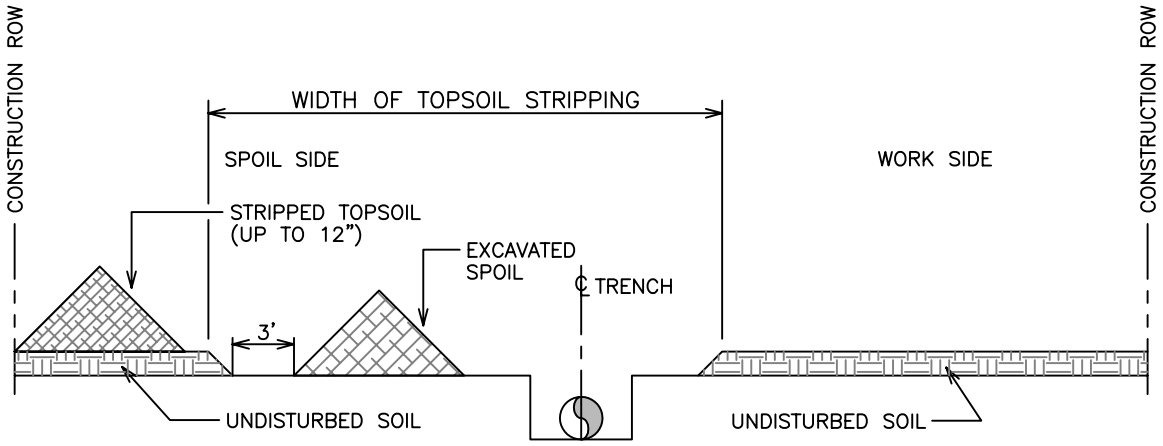


## DITCH PLUS SPOIL SIDE SEGREGATION

NOTES:

1. ALLOW FOR A 3' SEPARATION BETWEEN THE TOPSOIL PILE AND THE TRENCH SPOIL.
2. RETURN TRENCH SPOIL TO TRENCH AND COMPACT. FEATHER OUT EXCESS SPOIL OVER STRIPPED AREA LEAVING A LOW ROACH CENTERED OVER THE TRENCH. ALLEVIATE COMPACTION OF SUBSOILS OVER THE STRIPPED AREA.
3. RETURN TOPSOIL EVENLY OVER THE STRIPPED AREA AFTER TRENCH HAS SUFFICIENTLY SETTLED OR HAS BEEN COMPACTED.
4. ALLEVIATE COMPACTION OF TOPSOIL OVER ENTIRE RIGHT–OF–WAY.
5. SEGREGATED TOPSOIL MAY NOT BE USED FOR PADDING THE PIPE.

| | | | | |
|---|---|---|---|---|
| Empire Pipeline<br>A National Fuel Gas Company | ENGINEERING DEPT.<br>1100 STATE STREET<br>P.O. BOX 2081<br>ERIE, PA. 16512<br>(814) 871–8676 | DRAWN BY: L. A. PHILLIPS<br>FILENAME: EPC\BMP23.dwg<br>LAST REVISION DATE: 03/08/2006 | TOPSOIL SEGREGATION | DRAWING NUMBER: 23 |

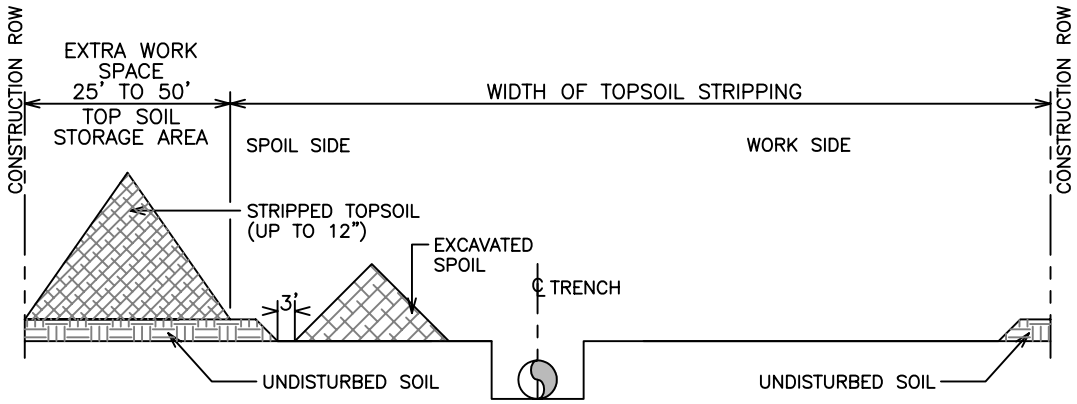


FULL RIGHT-OF-WAY TOPSOIL STRIPPING – A

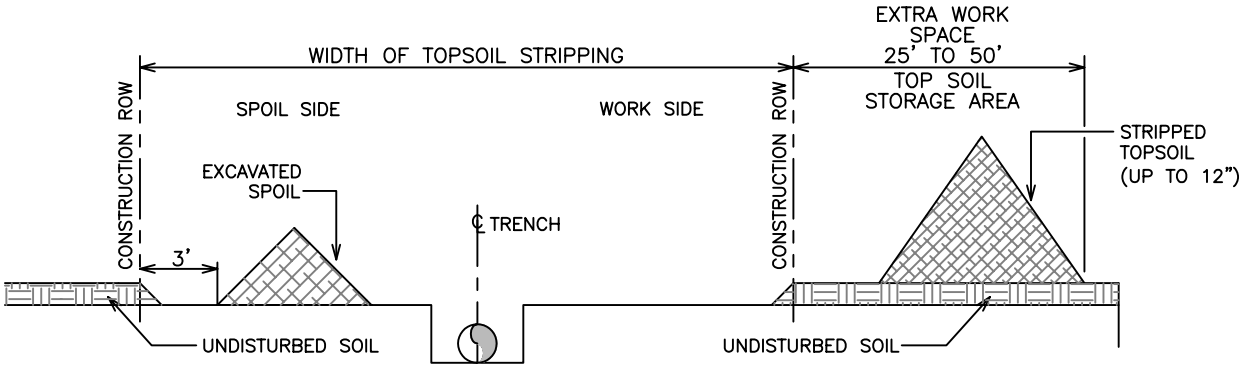


FULL RIGHT-OF-WAY TOPSOIL STRIPPING – B

NOTES:

1. ALLOW FOR A 3' SEPARATION BETWEEN THE TOPSOIL PILE AND THE TRENCH SPOIL.
2. RETURN TRENCH SPOIL TO TRENCH AND COMPACT. FEATHER OUT EXCESS SPOIL OVER STRIPPED AREA LEAVING A LOW ROACH CENTERED OVER THE TRENCH. ALLEVIATE COMPACTION OF SUBSOILS OVER THE STRIPPED AREA.
3. RETURN TOPSOIL EVENLY OVER THE STRIPPED AREA AFTER TRENCH HAS SUFFICIENTLY SETTLED OR HAS BEEN COMPACTED.
4. ALLEVIATE COMPACTION OF TOPSOIL OVER ENTIRE RIGHT-OF-WAY.
5. SEGREGATED TOPSOIL MAY NOT BE USED FOR PADDING THE PIPE.

| | | | | |
|---|---|---|---|---|
| Empire Pipeline<br>A National Fuel Gas Company | ENGINEERING DEPT.<br>1100 STATE STREET<br>P.O. BOX 2081<br>ERIE, PA. 16512<br>(814) 871-8676 | DRAWN BY: L. A. PHILLIPS<br>FILENAME: EPC\BMP23a.dwg<br>LAST REVISION DATE: 03/08/2006 | TOPSOIL SEGREGATION | DRAWING NUMBER: 23a |

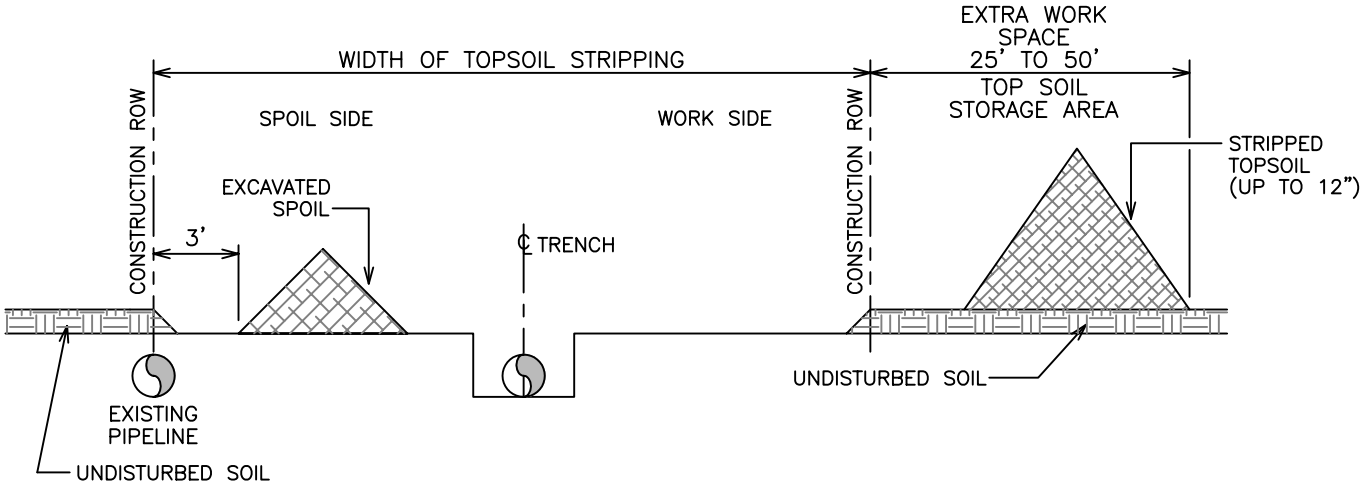


FULL RIGHT-OF-WAY TOPSOIL STRIPPING – PARALLELING PIPELINES

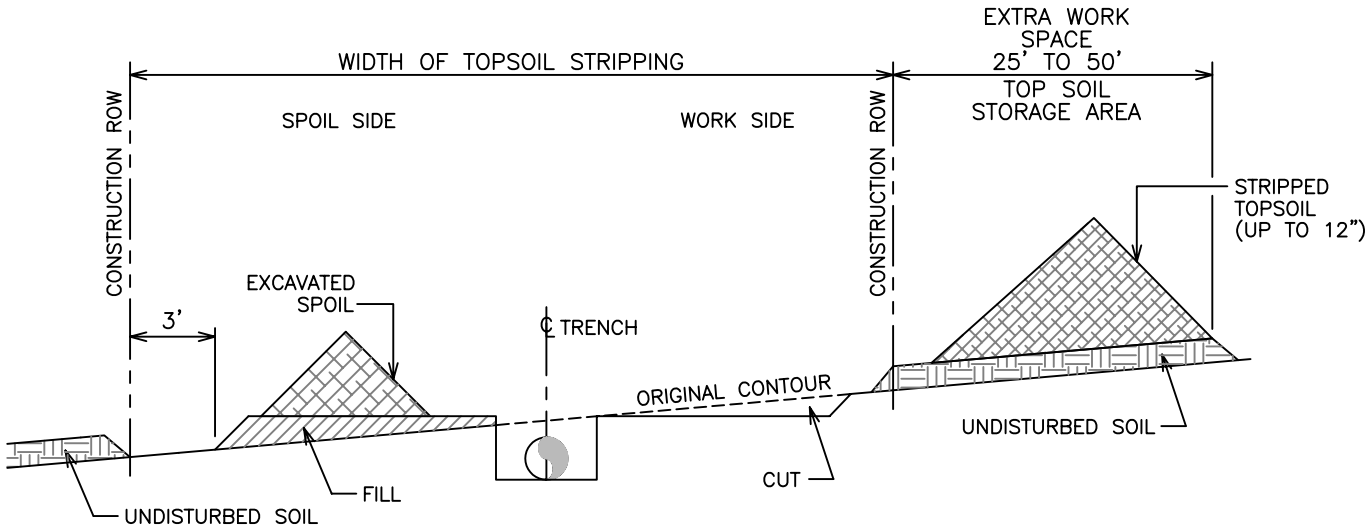


FULL RIGHT-OF-WAY TOPSOIL STRIPPING – SIDE SLOPES

NOTES:

1. ALLOW FOR A 3' SEPARATION BETWEEN THE TOPSOIL PILE AND THE TRENCH SPOIL.
2. RETURN TRENCH SPOIL TO TRENCH AND COMPACT. FEATHER OUT EXCESS SPOIL OVER STRIPPED AREA LEAVING A LOW ROACH CENTERED OVER THE TRENCH. ALLEVIATE COMPACTION OF SUBSOILS OVER THE STRIPPED AREA.
3. RETURN TOPSOIL EVENLY OVER THE STRIPPED AREA AFTER TRENCH HAS SUFFICIENTLY SETTLED OR HAS BEEN COMPACTED.
4. ALLEVIATE COMPACTION OF TOPSOIL OVER ENTIRE RIGHT-OF-WAY.
5. SEGREGATED TOPSOIL MAY NOT BE USED FOR PADDING THE PIPE.

| | | | | |
|---|---|---|---|---|
| Empire Pipeline<br>A National Fuel Gas Company | ENGINEERING DEPT.<br>1100 STATE STREET<br>P.O. BOX 2081<br>ERIE, PA. 16512<br>(814) 871-8676 | DRAWN BY: L. A. PHILLIPS<br>FILENAME: EPC\BMP23b.dwg<br>LAST REVISION DATE: 03/08/2006 | TOPSOIL SEGREGATION | DRAWING NUMBER: 23b |

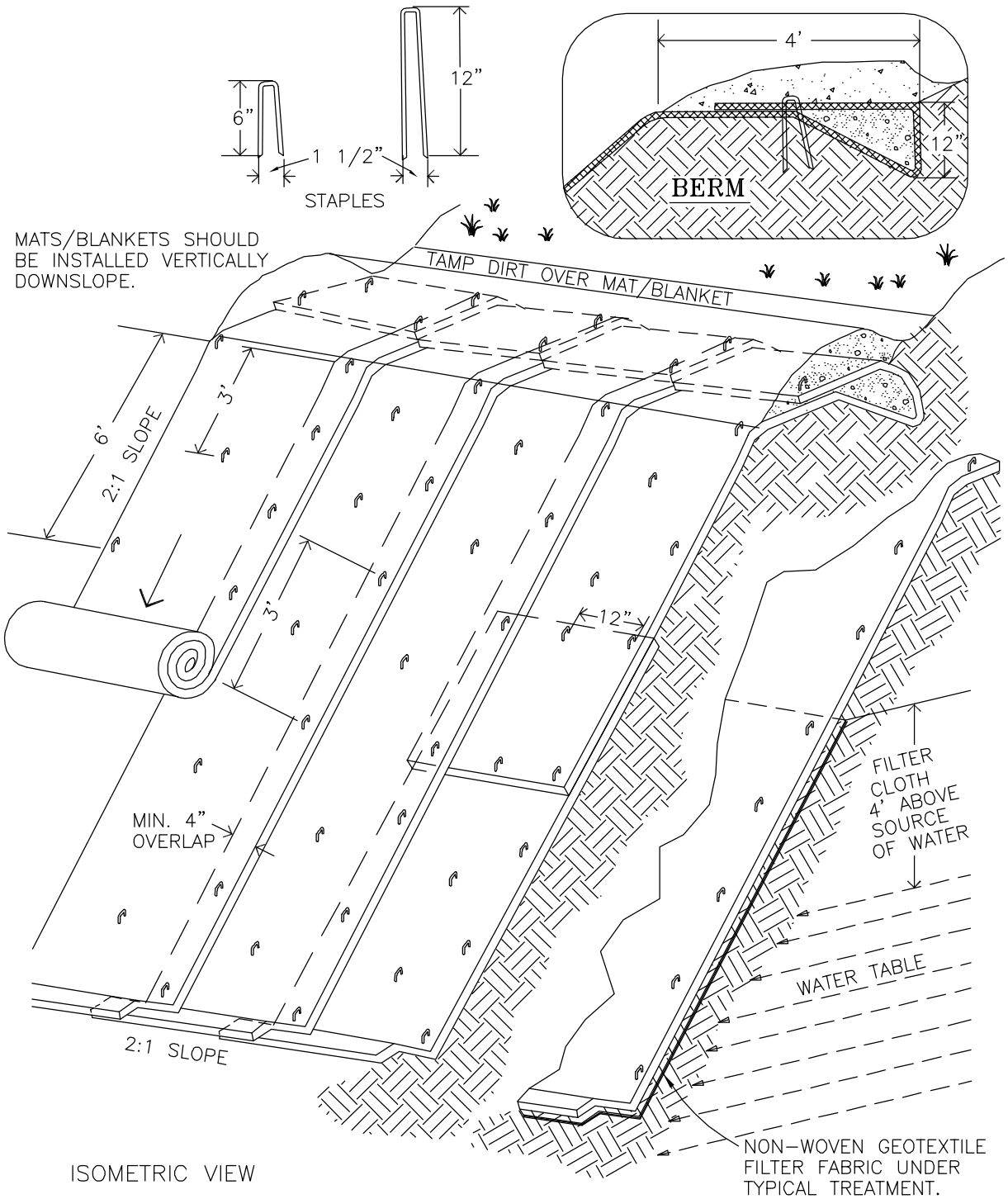


ISOMETRIC VIEW

## TYPICAL SLOPE SOIL STABLIZATION

NOTES:

1. SLOPE SURFACE SHALL BE FREE OF ROCKS, CLODS, STICKS AND GRASS. MATS/BLANKETS SHALL HAVE GOOD SOIL CONTACT.

2. LAY BLANKETS LOOSELY AND STAKE OR STAPLE TO MAINTAIN DIRECT CONTACT WITH THE SOIL. DO NOT STRETCH.

3. SEE DRAWING NO. 24A FOR INSTALLATION SPECIFICATIONS.

© 1994 JOHN McCULLAH

| | | | | |
|---|---|---|---|---|
| Empire Pipeline<br>A National Fuel Gas Company | ENGINEERING DEPT.<br>1100 STATE STREET<br>P.O. BOX 2081<br>ERIE, PA. 16512<br>(814) 871-8676 | MODIFIED BY: L. A. PHILLIPS<br>FILENAME: EPC\BMP24.dwg<br>DATE: 01/13/1997 | EROSION BLANKETS SLOPE INSTALLATION | DRAWING NUMBER: 24 |

CONSTRUCTION SPECIFICATIONS:

SITE PREPARATION

1. PROPER SITE PREPARATION IS ESSENTIAL TO ENSURE COMPLETE CONTACT OF THE PROTECTION MATTING WITH THE SOIL.
2. GRADE AND SHAPE AREA OF INSTALLATION.
3. REMOVE ALL ROCKS, CLODS, VEGETATIVE OR OTHER OBSTRUCTIONS SO THAT THE INSTALLED BLANKETS, OR MATS WILL HAVE DIRECT CONTACT WITH THE SOIL.
4. PREPARE SEEDBED BY LOOSENING 2"–3" OF TOPSOIL ABOVE FINAL GRADE.
5. INCORPORATE AMENDMENTS, SUCH AS LIME AND FERTILIZER, INTO SOIL ACCORDING TO SOIL TEST AND THE SEEDING PLAN.

SEEDING

SEED AREA BEFORE BLANKET INSTALLATION FOR EROSION CONTROL AND RE–VEGETATION OR SEED AFTER MAT INSTALLATION FOR TURF REINFORCEMENT. WHEN SEEDING PRIOR TO BLANKET INSTALLATION, ALL CHECK SLOTS AND OTHER AREAS DISTURBED DURING INSTALLATION MUST BE RESEEDED. WHERE SOIL FILLING IS SPECIFIED, SEED THE MATTING AND THE ENTIRE DISTURBED AREA AFTER INSTALLATION AND PRIOR TO FILLING THE MAT WITH SOIL.

ANCHORING

U–SHAPED WIRE STAPLES, METAL GEOTEXTILE STAKE PINS OR TRIANGULAR WOODEN STAKES CAN BE USED TO ANCHOR MATS TO THE GROUND SURFACE. WIRE STAPLES SHOULD BE A MINIMUM OF 8 GAUGE. METAL STAKE PINS SHOULD BE 3/16" DIAMETER STEEL WITH A 1 1/2" STEEL WASHER AT THE HEAD OF THE PIN. WIRE STAPLES AND METAL STAKE SHOULD BE DRIVEN FLUSH TO THE SOIL SURFACE. WOODEN STAKES SHOULD BE 3" X 1 1/2" TRIANGULAR WOODEN SURVEY STAKES. TWO INCHES OF WOOD STAKING SHOULD REMAIN ABOVE THE SOIL SURFACE. ALL ANCHORS SHOULD BE 8"–18" LONG AND HAVE SUFFICIENT GROUND PENETRATION TO RESIST PULLOUT. LONGER ANCHORS MAY BE REQUIRED FOR LOOSE SOILS.

INSTALLATION ON SLOPES

1. BEGIN AT THE TOP OF THE SLOPE AND ANCHOR ITS BLANKET IN A 6" DEEP X 6" WIDE TRENCH. BACKFILL TRENCH AND TAMP EARTH FIRMLY.
2. UNROLL BLANKET DOWNSLOPE IN THE DIRECTION OF THE WATER FLOW.
3. THE EDGES OF ADJACENT PARALLEL ROLLS MUST BE OVERLAPPED 2" TO 3" AND BE STAPLED EVERY 3 FEET.
4. WHEN BLANKETS MUST BE SPLICED, PLACE BLANKETS END OVER END (SHINGLE STYLE) WITH 6" OVERLAP. STAPLE THROUGH OVERLAPPED AREA, APPROXIMATELY 12" APART.
5. BLANKETS SHALL BE STAPLED SUFFICIENTLY TO ANCHOR BLANKET AND MAINTAIN CONTACT WITH THE SOIL. STAPLES SHALL BE PLACED DOWN THE CENTER AND STAGGERED WITH THE STAPLES PLACED ALONG THE EDGES STEEP SLOPES, 1:1 TO 2:1, REQUIRE 2 STAPLES PER SQUARE YARD. MODERATE SLOPES, 2:1 TO 3:1, REQUIRE 1 1/2 STAPLES PER SQUARE YARD (1 STAPLE 3' O.C.). GENTLE SLOPES REQUIRE 1 STAPLE PERSQUARE YARD.

SOIL FILLING IF SPECIFIED FOR TURF REINFORCEMENT.

1. AFTER SEEDING, SPREAD AND LIGHTLY RAKE 1/2" – 3/4" OF FINE TOPSOIL INTO THE MAT APERTURES TO COMPLETELY FILL MAT THICKNESS.
2. USE BACKSIDE OF RAKE OR OTHER FLAT IMPLEMENT.
3. SPREAD TOPSOIL USING LIGHTWEIGHT LOADER, BACKHOE, OR OTHER POWER EQUIPMENT. AVOID SHARP TURNS WITH EQUIPMENT.
4. DO NOT DRIVE TRACKED OR HEAVY EQUIPMENT OVER MAT.
5. AVOID ANY TRAFFIC OVER MATTING IF LOOSE OR WET SOIL CONDITIONS EXIST.
6. USE SHOVELS, RAKES OR BROOMS FOR FINE GRADING AND TOUCH UP.
7. SMOOTH OUT SOIL FILLING JUST EXPOSING TOP NETTING OF MATRIX.

INSPECTION AND MAINTENANCE

1. ALL BLANKET AND MATS SHOULD BE INSPECTEDPERIODICALLY FOLLOWING INSTALLATION.
2. INSPECT INSTALLATION AFTER SIGNIFICANT RAINSTORMS TO CHECK FOR EROSION AND UNDERMINING. ANY FAILURE SHOULD BE REPAIRED IMMEDIATELY.
3. IF WASHOUT OR BREAKAGE OCCURS, RE–INSTALL THE MATERIAL AFTER REPAIRING THE DAMAGE TO THE SLOPE OR DRAINAGEWAY.

© 1994 JOHN McCULLAH

| | | | | |
|---|---|---|---|---|
| Empire Pipeline<br>A National Fuel Gas Company | ENGINEERING DEPT.<br>1100 STATE STREET<br>P.O. BOX 2081<br>ERIE, PA. 16512<br>(814) 871–8676 | MODIFIED BY: L. A. PHILLIPS<br>FILENAME: NFGSC\BMP24A.dwg<br>DATE: 01/13/1997 | SPECIFICATIONS<br>EROSION BLANKETS<br>SLOPE INSTALLATION | DRAWING NUMBER:<br>24A |

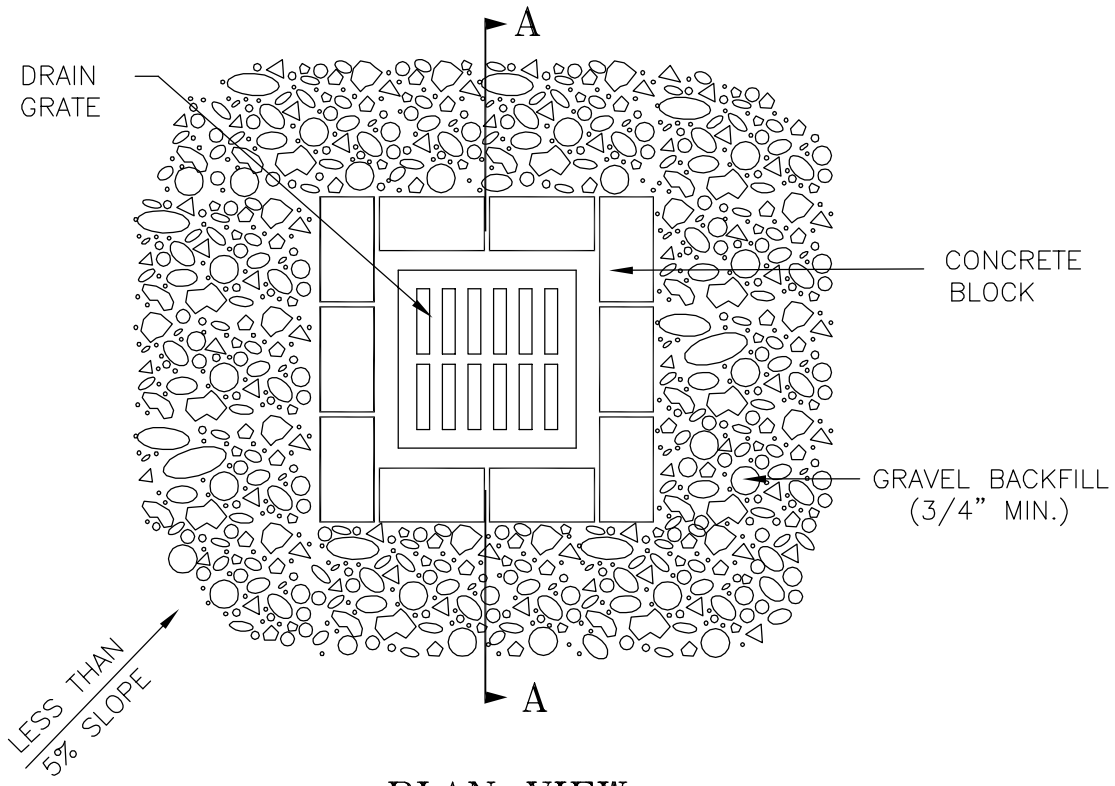


PLAN VIEW

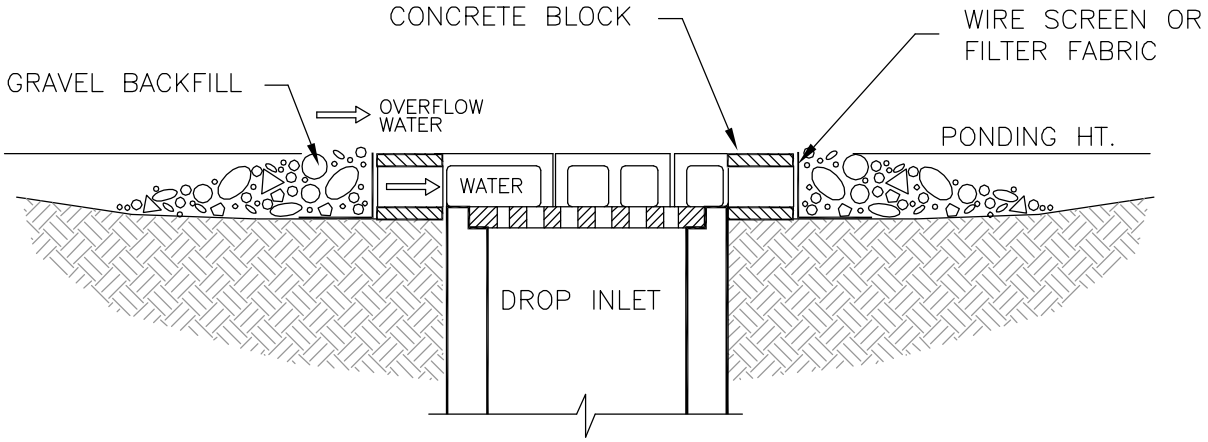


SECTION A – A

NOTES:

1. DROP INLET SEDIMANT BARRIERS ARE TO BE USED FOR SMALL, NEARLY LEVEL DRAINAGE AREAS. (LESS THAN 5%)

2. EXCAVATE A BASIN OF SUFFICIENT SIZE ADJACENT TO THE DROP INLET.

3. THE TOP OF THE STRUCTURE (PONDING HEIGHT) MUST BE WELL BELOW THE GROUND ELEVATION DOWNSLOPE TO PREVENT RUNOFF FROM BY-PASSING THE INLET. A TEMPORARY DIKE MAY BE NECESSARY ON THE DOWNSLOPE SIDE OF THE STRUCTURE.

© 1994 JOHN McCULLAH

| | | | | |
|---|---|---|---|---|
| Empire Pipeline<br>A National Fuel Gas Company | ENGINEERING DEPT.<br>1100 STATE STREET<br>P.O. BOX 2081<br>ERIE, PA. 16512<br>(814) 871-8676 | MODIFIED BY: L. A. PHILLIPS<br>FILENAME: EPC\BMP25.dwg<br>DATE: 01/14/1997 | BLOCK AND GRAVEL DROP INLET SEDIMENT BARRIER | DRAWING NUMBER: 25 |

## TYPICAL ANODE INSTALLATION

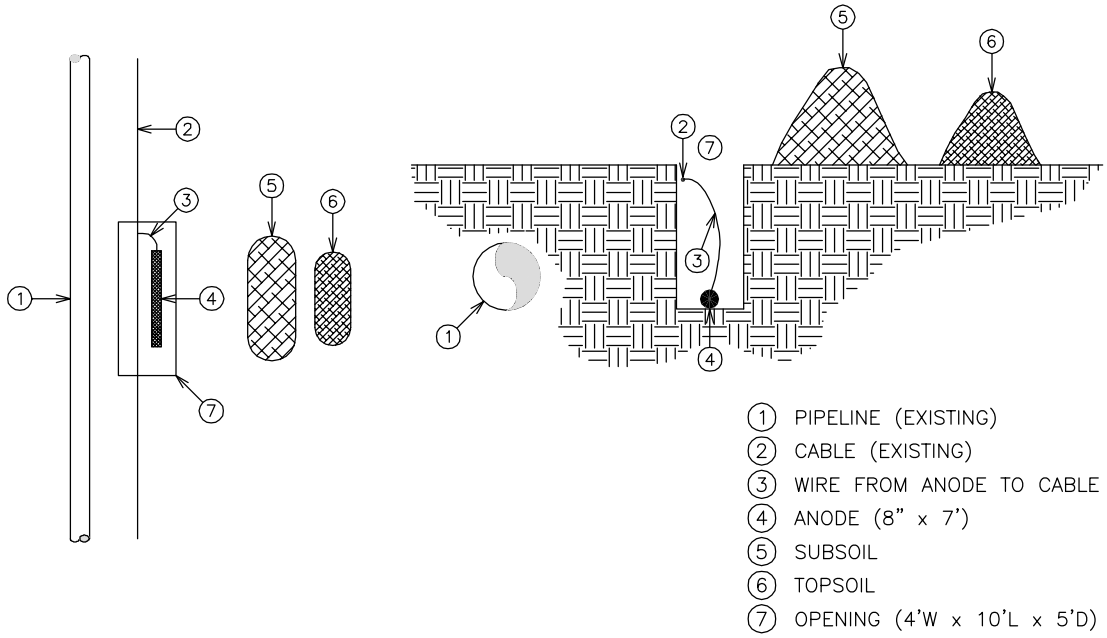


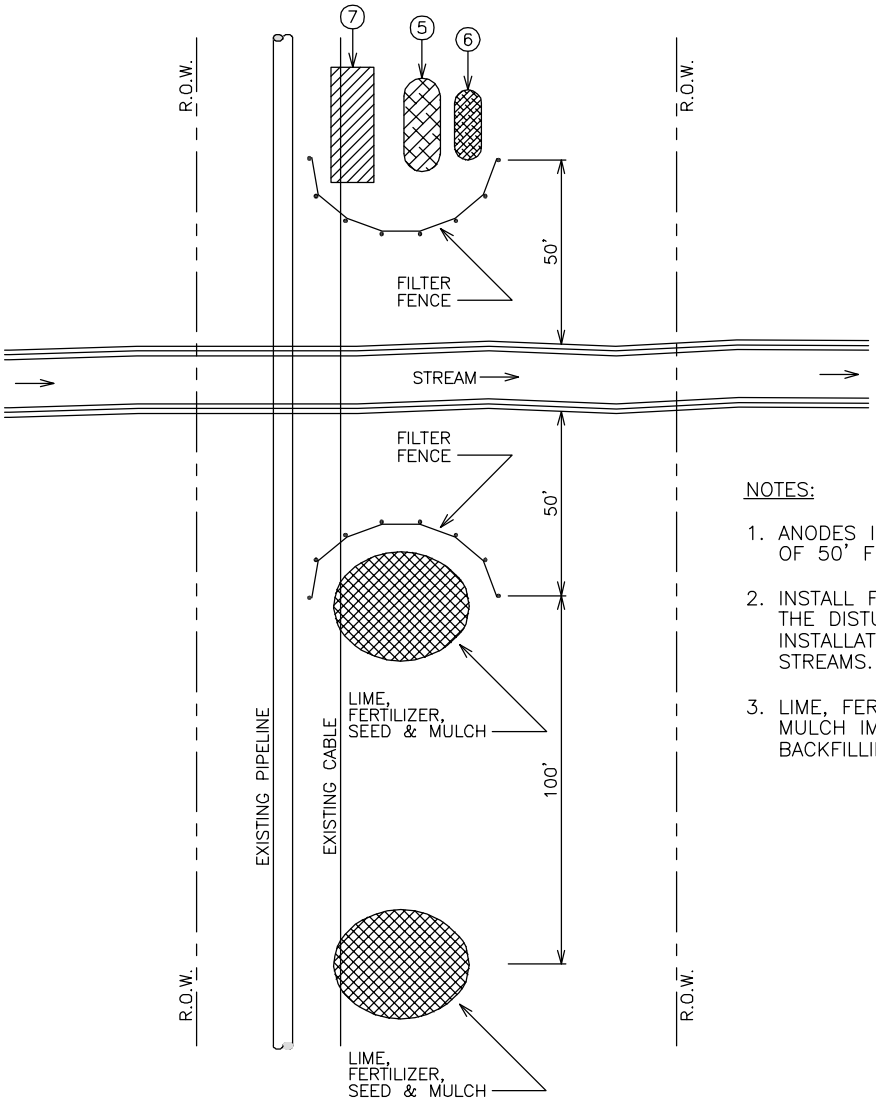


NOTES:

1. ANODES INSTALLED A MINIMUM OF 50' FROM EDGE OF WATER.
2. INSTALL FILTER FENCE ACROSS THE DISTURBED AREAS AT ANODE INSTALLATIONS ADJACENT TO STREAMS.
3. LIME, FERTILIZE, SEED AND MULCH IMMEDIATLEY AFTER BACKFILLING.

| | | | | |
|---|---|---|---|---|
| Empire Pipeline<br>A National Fuel Gas Company | ENGINEERING DEPT.<br>1100 STATE STREET<br>P.O. BOX 2081<br>ERIE, PA. 16512<br>(814) 871-8676 | DRAWN BY: MCCREA/PHILLIPS<br>FILENAME: EPC\BMP26.dwg<br>DATE: 01/16/1998 | CATHODIC PROTECTION ANODE INSTALLATION | DRAWING NUMBER: 26 |

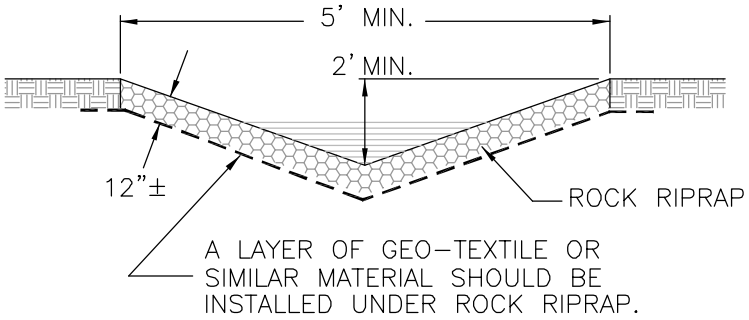


VELOCITY = 8.7'/SEC.
Q = 43 CFS

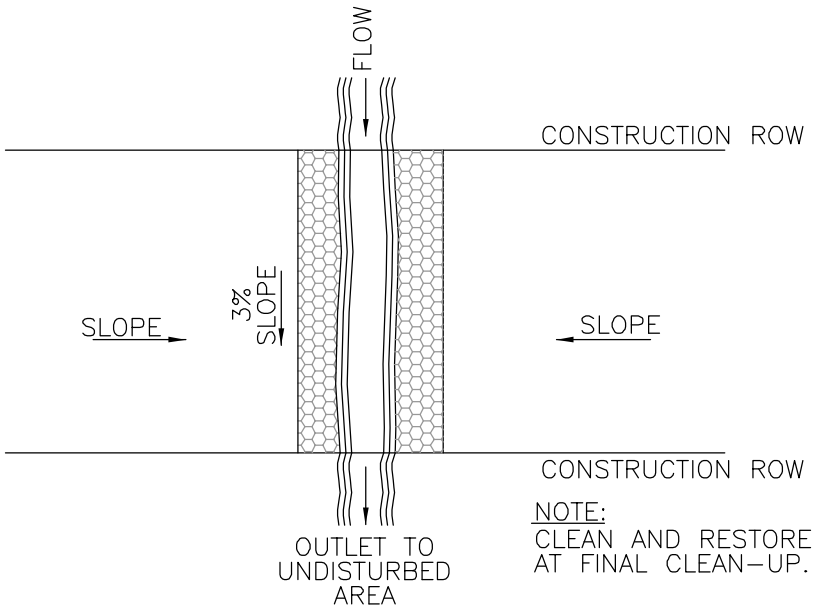


NOTE:
CLEAN AND RESTORE DITCH AT FINAL CLEAN-UP.

CONSTRUCTION SPECIFICATIONS

1. COMPACT ANY FILL REQUIRED IN THE SUBGRADE TO A DENSITY APPROXIMATING THAT OF THE SURROUNDING UNDISTURBED MATERIAL.
2. OVERFILL DEPRESSIONS WITH RIPRAP.
3. REMOVE BRUSH, TREES, STUMPS, AND OTHER OBJECTIONABLE MATERIAL.
4. CUT THE SUBGRADE SUFFICIENTLY DEEP SO THAT THE FINISHED GRADE OF THE RIPRAP WILL BE AT THE ELEVATION OF THE SURROUNDING AREA. CHANNELS SHOULD BE EXCAVATED SUFFICIENTLY TO ALLOW PLACEMENT OF THE RIPRAP IN A MANNER SUCH THAT THE FINISHED INSIDE DIMENSIONS AND GRADE OF THE RIPRAP MEET DESIGN SPECIFICATIONS.
5. PLACE THE SAND AND GRAVEL FILTER BLANKET IMMEDIATELY AFTER THE GROUND FOUNDATION IS PREPARED FOR GRAVEL, SPREAD FILTER STONE IN A UNIFORM LAYER TO THE SPECIFIED DEPTH. WHERE MORE THAN ONE LAYER OF FILTER MATERIAL IS USED, SPREAD THE LAYERS WITH MINIMAL MIXING.
6. PLACE THE FILTER FABRIC DIRECTLY ON THE PREPARED FOUNDATION. OVERLAP THE EDGES BY AT LEAST 12 INCHES, AND SPACE ANCHOR PINS EVERY 3 FEET ALONG THE OVERLAP. BURY THE UPPER AND LOWER ENDS OF THE CLOTH A MINIMUM OF 12 INCHES BELOW GROUND. TAKE CARE NOT TO DAMAGE THE CLOTH WHEN PLACING RIPRAP.
7. WHERE LARGE STONES ARE USED OR MACHINE PLACEMENT IS DIFFICULT, A 4-INCH LAYER OF FINE GRAVEL OR SAND MAY BE NEEDED TO PROTECT THE FILTER FABRIC.
8. PLACEMENT OF RIPRAP SHOULD FOLLOW IMMEDIATELY AFTER PLACEMENT OF THE FILTER.
9. PLACE RIPRAP SO THAT IT FORMS A DENSE, WELL-GRADED MASS OF STONE WITH A MINIMUM OF VOIDS.
10. PLACE RIPRAP TO ITS FULL THICKNESS IN ONE OPERATION.
11. DO NOT PLACE RIPRAP BY DUMPING THROUGH CHUTES OR OTHER METHODS THAT CAUSE SEGREGATION OF STONE SIZES.
12. TAKE CARE NOT TO DISLODGE THE UNDERLYING BASE OR FILTER WHEN PLACING THE STONES.
13. THE FINISHED SLOPE SHOULD BE FREE OF POCKETS OF SMALL STONE OR CLUSTERS OF LARGE STONES.

MAINTENANCE
RIPRAP SHOULD BE INSPECTED PERIODICALLY FOR SCOUR OR DISLODGED STONES. CONTROL OF WEED AND BRUSH GROWTH MAY BE NEEDED IN SOME LOCATIONS.

| | | | | |
|---|---|---|---|---|
| Empire Pipeline<br>A National Fuel Gas Company | ENGINEERING DEPT.<br>1100 STATE STREET<br>P.O. BOX 2081<br>ERIE, PA. 16512<br>(814) 871-8676 | DRAWN BY: L. A. PHILLIPS<br>FILENAME: EPC\BMP27.dwg<br>DATE: 01/20/1999 | STORM WATER CHANNEL | DRAWING NUMBER:<br>27 |

# FILTER BAGS FOR REMOVING SEDIMENT FROM PUMPED WATER

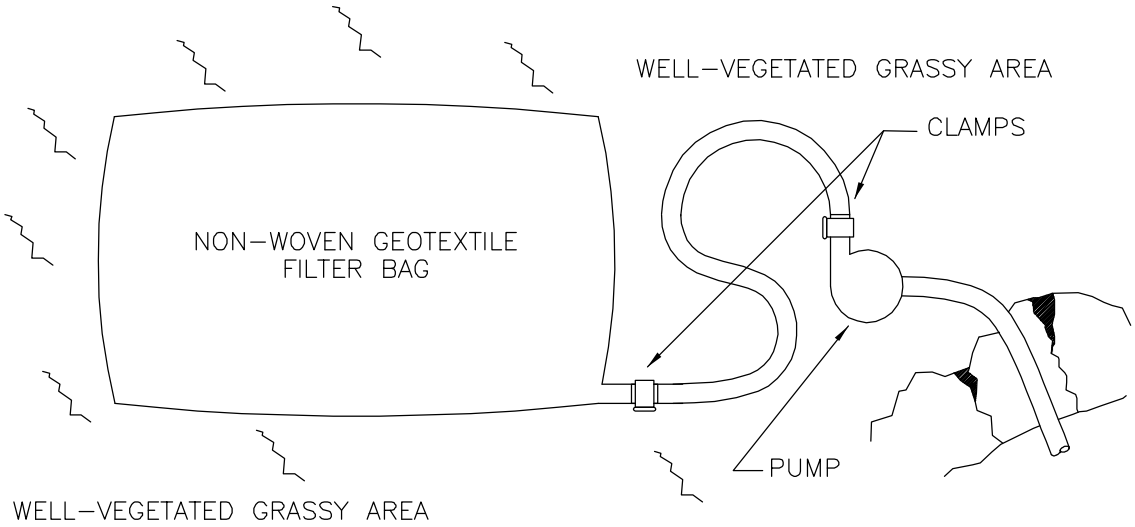


PLAN VIEW

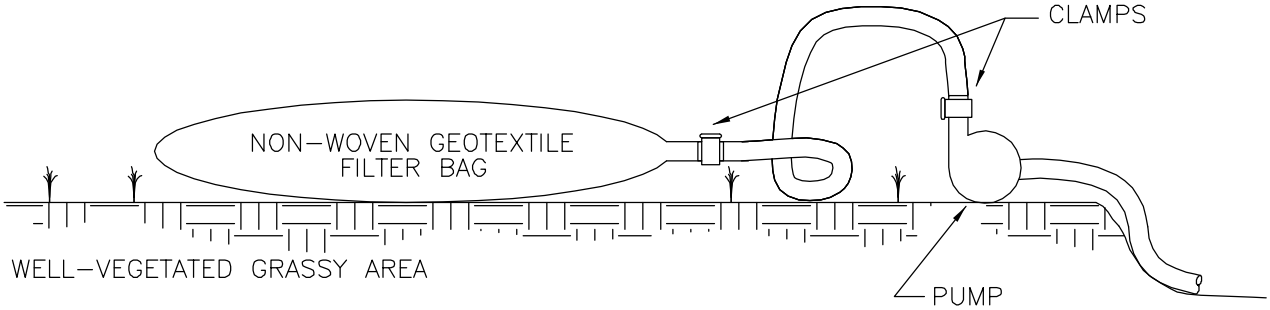


ELEVATION VIEW

1. FILTER BAGS SHALL BE MADE FROM NON-WOVEN GEOTEXTILE MATERIAL SEWN WITH HIGH STRENGTH, DOUBLE STITCHED "J" TYPE SEAMS. THEY SHALL BE CAPABLE OF TRAPPING PARTICLES LARGER THAN 150 MICRONS.
2. A SUITABLE MEANS OF ACCESSING THE BAG WITH MACHINERY REQUIRED FOR DISPOSAL PURPOSES MUST BE PROVIDED. FILTER BAGS SHALL BE REPLACED WHEN THEY BECOME 1/2 FULL. SPARE BAGS SHALL BE KEPT AVAILABLE FOR REPLACEMENT OF THOSE THAT HAVE FAILED OR ARE FILLED.
3. BAGS SHALL BE LOCATED IN WELL-VEGETATED (GRASSY) AREA AND DISCHARGE ONTO STABLE, EROSION RESISTANT AREAS. WHERE THIS IS NOT POSSIBLE, A GEOTEXTILE FLOW PATH SHALL BE PROVIDED. BAGS SHALL NOT BE PLACED ON SLOPES GREATER THAN 5%.
4. THE PUMP DISCHARGE HOSE SHALL BE INSERTED INTO THE BAGS IN THE MANNER SPECIFIED BY THE MANUFACTURER AND SECURELY CLAMPED.
5. THE PUMPING RATE SHALL BE NO GREATER THAN 750 GPM OR 1/2 THE MAXIMUM SPECIFIED BY THE MANUFACTURER, WHICHEVER IS LESS. PUMP INTAKES SHOULD BE FLOATING AND SCREENED.
6. ALL FILTER BAGS AND TRAPPED SEDIMENT SHALL BE REMOVED TO A SUITABLE WASTE AREA WHEN ACCUMULATED SEDIMENTS REACH 1/2 TOTAL BAG CAPACITY.

| | | | | |
|---|---|---|---|---|
| Empire Pipeline<br>A National Fuel Gas Company | ENGINEERING DEPT.<br>1100 STATE STREET<br>P.O. BOX 2081<br>ERIE, PA. 16512<br>(814) 871-8676 | DRAWN BY: NICHTER/PHILLIPS<br>FILENAME: EPC\BMP28.dwg<br>DATE: 08/12/2004 | DEWATERING FILTER BAG | DRAWING NUMBER:<br>28 |

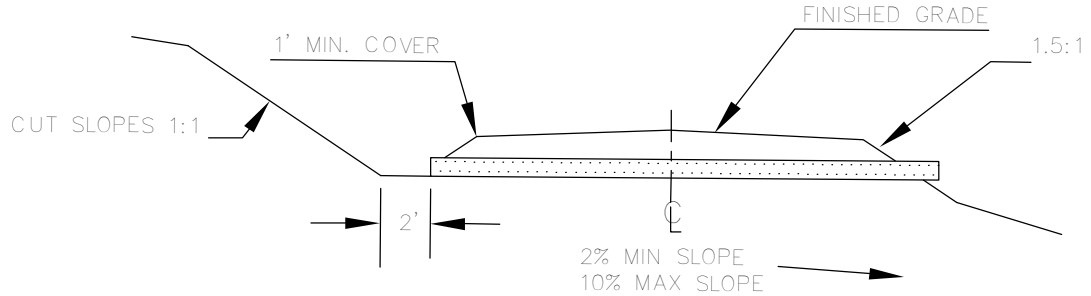


CULVERT SECTION

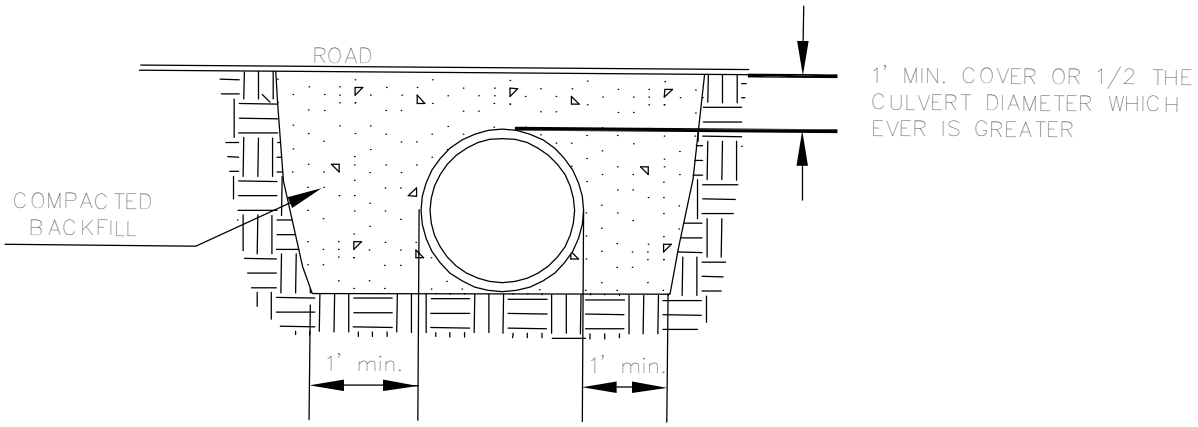


CULVERT – END VIEW

PROFILE VIEW

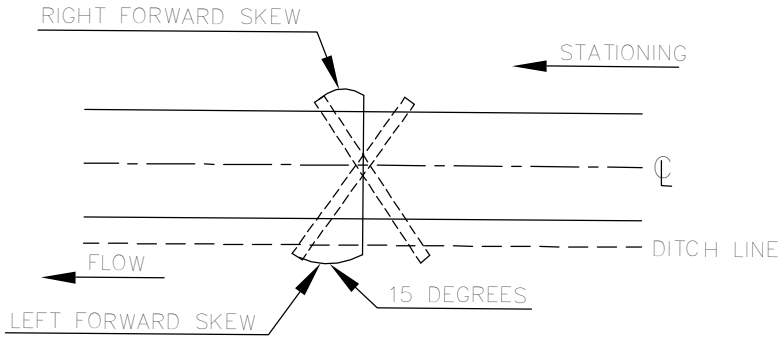


SKEW DETAIL

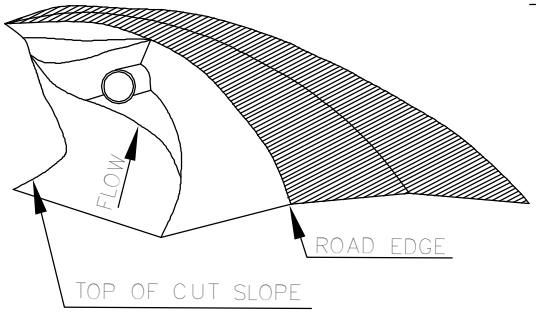


DITCH BLOCK

PERSPECTIVE VIEW

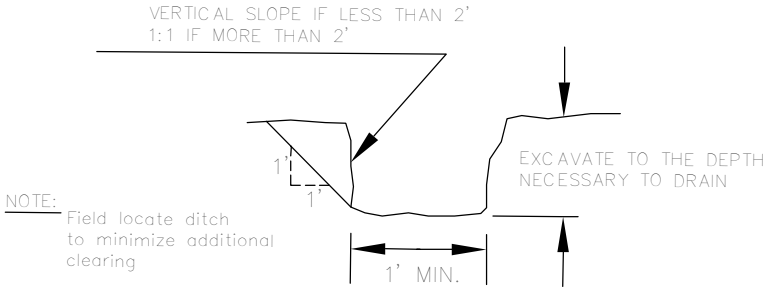


NOTE: Field locate ditch to minimize additional clearing

OUTLET DITCH SECTION

| | | | | |
|---|---|---|---|---|
| Empire Pipeline — A National Fuel Gas Company | ENGINEERING DEPT.<br>1100 STATE STREET<br>P.O. BOX 2081<br>ERIE, PA. 16512<br>(814) 871-8676 | DRAWN BY: P. BLAKESLEE<br>FILENAME: EPC\BMP29.dwg<br>DATE: 09/14/01 | ROAD CULVERT | DRAWING NUMBER: 29 |

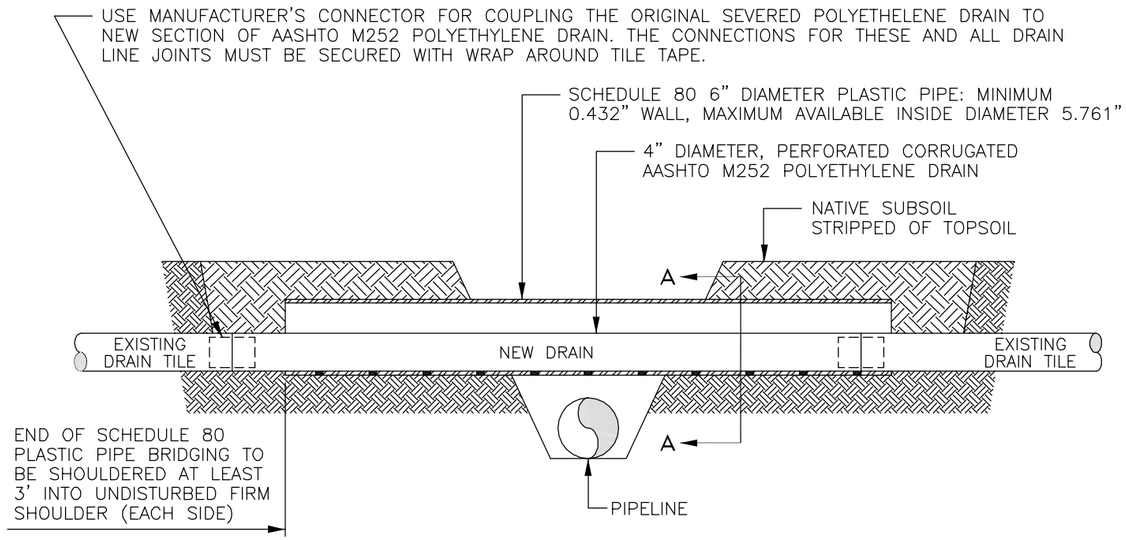


| DRAINAGE TILE | SUPPORT SIZE |
|---|---|
| 3" TO 5" | 6" PIPE |
| 6" | 8" PIPE |
| 7" TO 8" | 10" PIPE |
| 9" TO 10" | 12" PIPE |
| 12" | W12 x 14 |
| 15" TO 18" | W16 x 26 |
| OVER 18" | W18 x 46 |

| PVC SCHEDULE 80 PIPE (FOR BRIDGING–SLEEVES) | | | |
|---|---|---|---|
| NOMINAL SIZE (INCHES) | AVERAGE O.D. (INCHES) | MAXIMUM WALL THICKNESS (INCHES) | MAXIMUM AVAILABLE I.D. (INCHES) |
| 4 | 4.500 | 0.337 | 3.826 |
| 6 | 6.625 | 0.432 | 5.761 |
| 8 | 8.625 | 0.500 | 7.625 |
| 10 | 10.750 | 0.593 | 9.564 |
| 12 | 12.750 | 0.687 | 11.376 |

| AASHTO M252 SINGLE WALL, CORRUGATED, PERFORATED (SLOTTED) POLYETHYLENE DRAIN LINE | |
|---|---|
| NOMINAL SIZE (INCHES) | OUTSIDE DIAMETER (INCHES) |
| 4 | 4.71 |
| 6 | 7.00 |
| 8 | 9.90 |
| 10 | 11.90 |
| 12 | 14.41 |
| 15 | 17.70 |

SECTION A–A VIEW OF DRAIN LINE PROTECTED BY PERFORATED, DURABLE SLEEVE

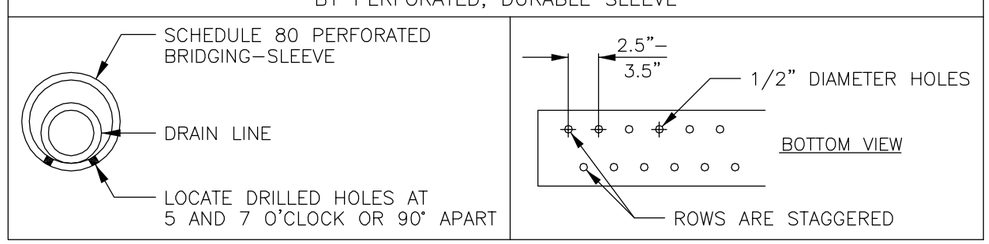


NOTES:

1. THE BRIDGING–SLEEVE REPAIR IS VERTICALLY POSITIONED ACROSS THE TRENCH SO IT MAINTAINS THE GRAVITY–FLOW GRADIENT OF THE ORIGINAL DRAIN TILE.
2. BOTH OF THE RECONNECTIONS MAY BE LOCATED PHYSICALLY OUTSIDE OF THE BRIDGING–SLEEVE (LEFT) OR INSIDE THE SLEEVE (RIGHT) AFTER SLIDING IT OVER THE REPAIR.

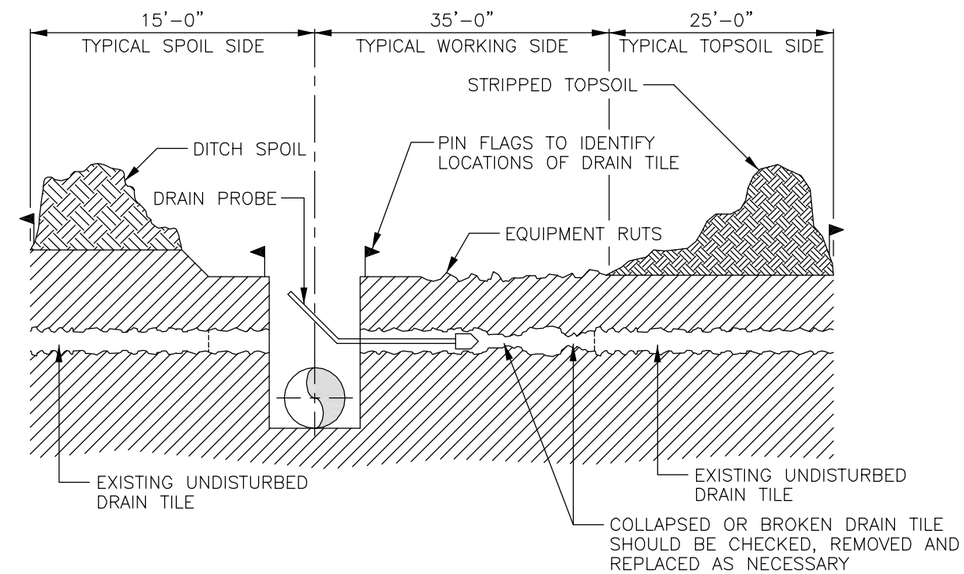


NOTE:

WITHIN ALL AREAS OF CONSTRUCTION ACTIVITIES;

1. PROBE AND CLEAN OUT ALL DRAIN TILES.
2. REPLACE ANY DAMAGED TILES.
3. REPAIR ANY DAMAGED JOINTS.

| | | | |
|---|---|---|---|
| Empire Pipeline A National Fuel Gas Company | DRAWN BY: L. A. PHILLIPS<br>FILENAME: EPC\BMP30.dwg<br>DATE: 06/24/2005 | TYPICAL DRAIN TILE REPAIR ACROSS TRENCH | DRAWING NUMBER: 30 |

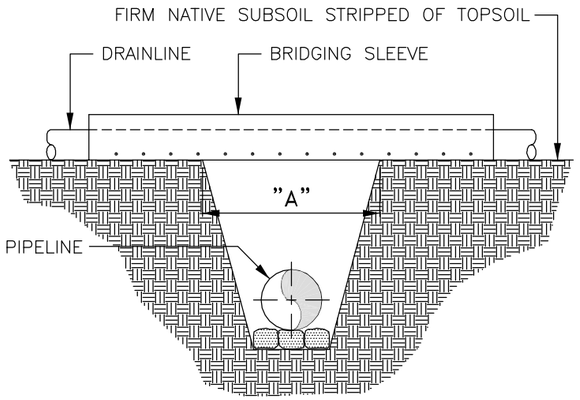


IF DISTANCE "A" DOES NOT EXCEED 10 FEET, THE SCHEDULE 80 PERFORATED BRIDGING–SLEEVE DOES NOT REQUIRE SUPPORT UNDER THE BRIDGING–SLEEVE.

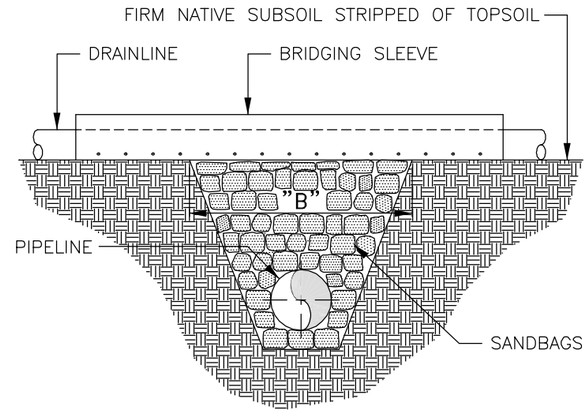


IF DISTANCE "B" EXCEEDS 10 FEET, THE SCHEDULE 80 PERFORATED BRIDGING SLEEVE REQUIRES A MODIFIED SANDBAG TRENCH BREAKER UNDER THE BRIDGING SLEEVE

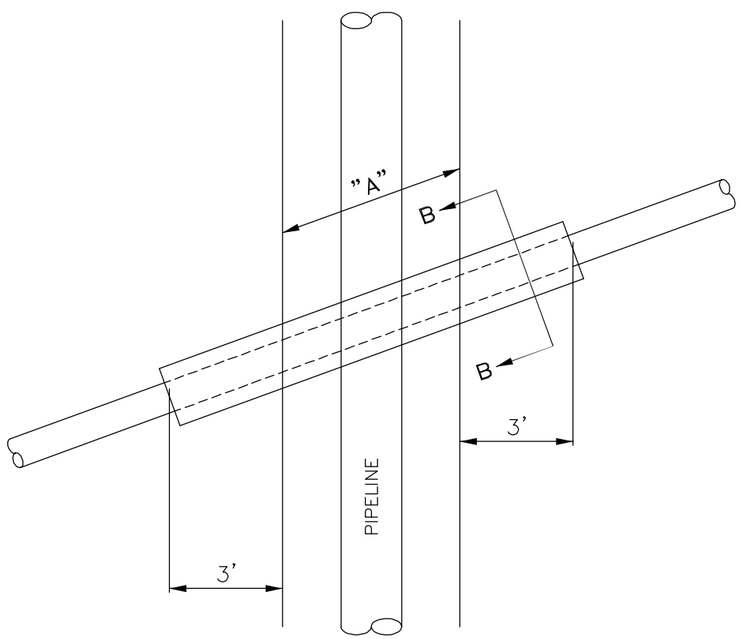


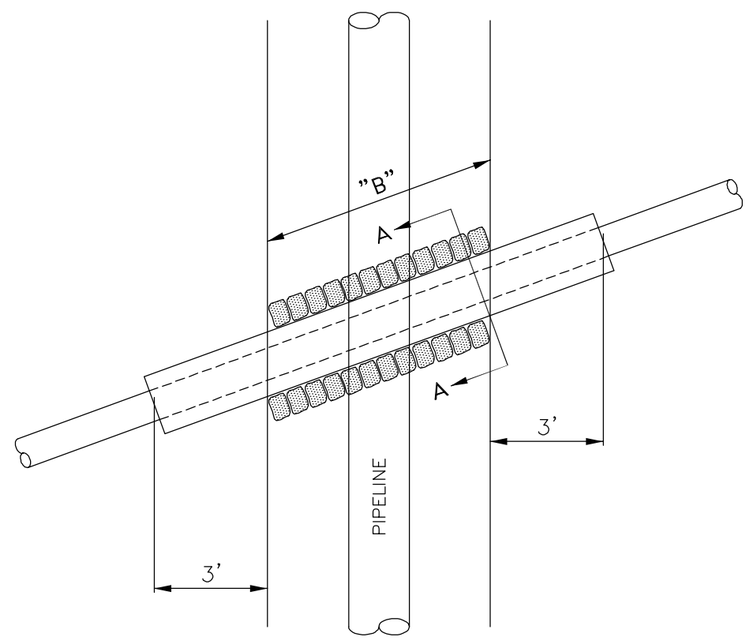


CROSS SECTION "B–B" IS THE SAME AS CROSS SECTION "A–A", MINUS THE SAND BAG TRENCH BREAKER. MINIMUM OF 1"–2" WASHED STONE 4"–6" THICK UNDERNEATH, AROUND SIDES AND OVER TOP OF THE BRIDGING SLEEVE.

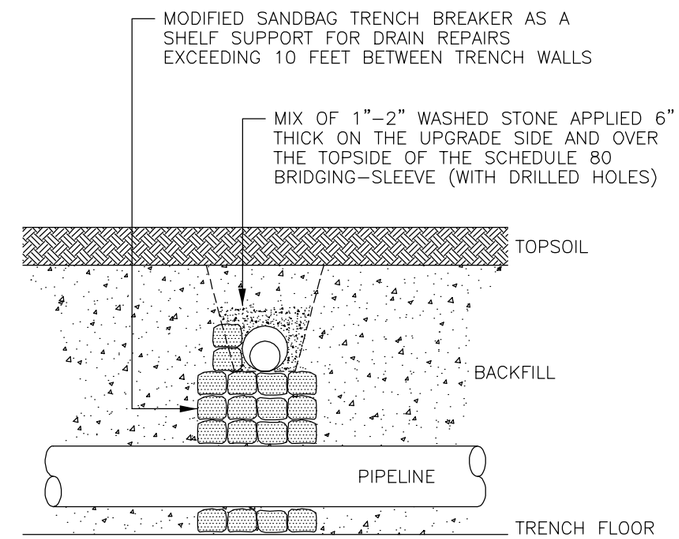


THE BRIDGING–SLEEVE DRAIN REPAIR RESTS ON THE UPGRADIENT SIDE OF THE MODIFIED SANDBAG TRENCH BREAKER. THE HIGHER PORTION OF THE TRENCH BREAKER IS ON THE DOWN GRADIENT SIDE OF THE REPAIR.

NOTE: IF THE REPAIR OF THE SEVERED DRAINLINE CROSSES THE PIPELINE TRENCH AT AN ANGLE REQUIRING MORE THAN 20' OF BRIDGING–SLEEVE BETWEEN THE FARTHEST ENDS OF THE FIRM SHELVES, MODIFY THE CROSSING ANGLE TO SHORTEN THE TOTAL LENGTH OF THE CROSSING AND THEN TIE TO THE EXISTING DRAIN TILE.

## SECTION A-A

| | | | |
|---|---|---|---|
| Empire Pipeline — A National Fuel Gas Company | DRAWN BY: L. A. PHILLIPS<br>FILENAME: NFGSC\TD30A.dwg<br>DATE: 06/29/2005 | TYPICAL DRAIN TILE REPAIR ACROSS TRENCH | DRAWING NUMBER: 30A |

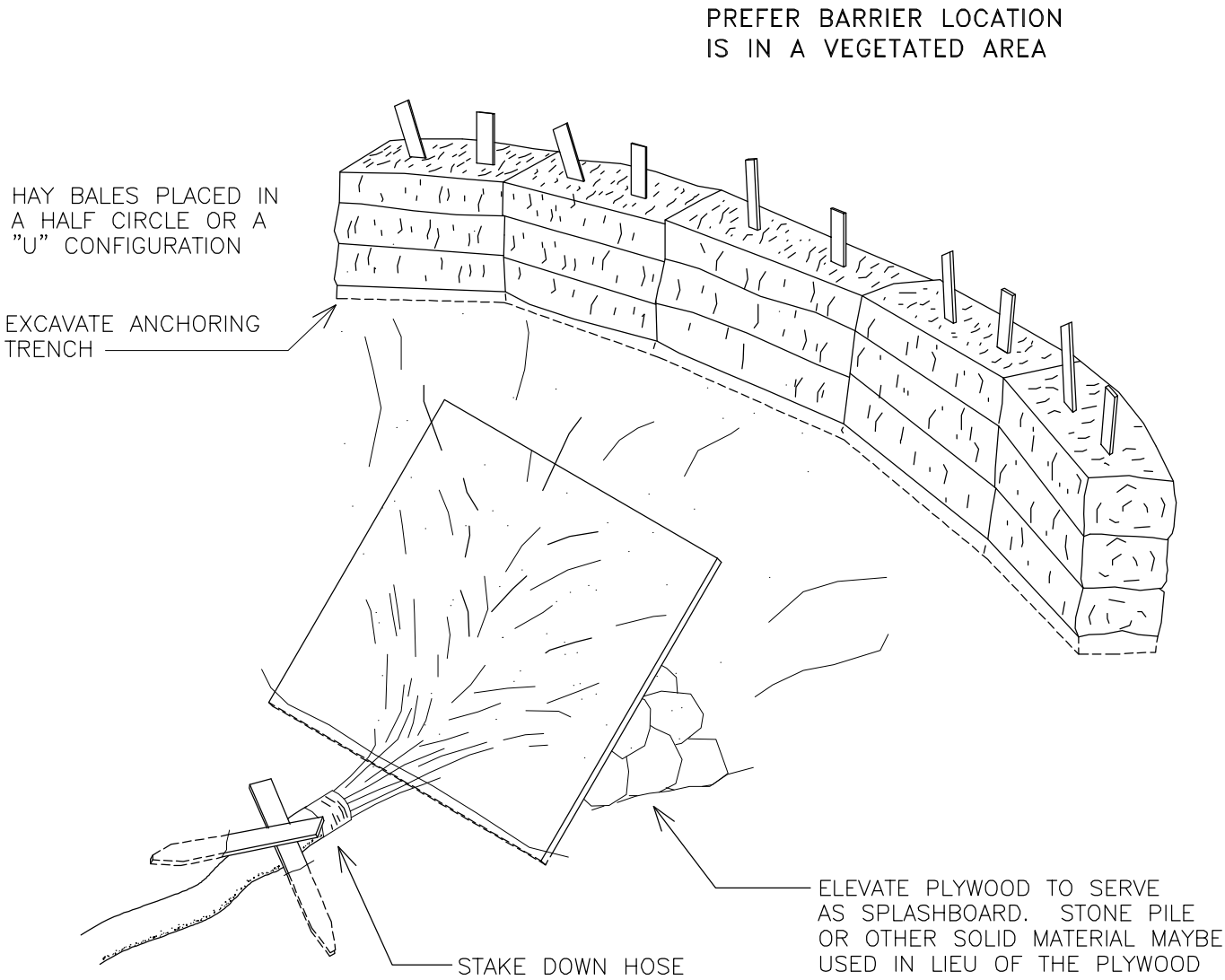


**USED FOR TRENCH OR HYDROSTATIC DE-WATERING**

| | | | | |
|---|---|---|---|---|
| Empire Pipeline<br>A National Fuel Gas Company | ENGINEERING DEPT.<br>1100 STATE STREET<br>P.O. BOX 2081<br>ERIE, PA. 16512<br>(814) 871-8676 | DRAWN BY: DRISCOLL/PHILLIPS<br>FILENAME: EPC\BMP31.dwg<br>DATE: 03/17/2003 | ENERGY DISSIPATER | DRAWING NUMBER:<br>31 |

## PLAN VIEW

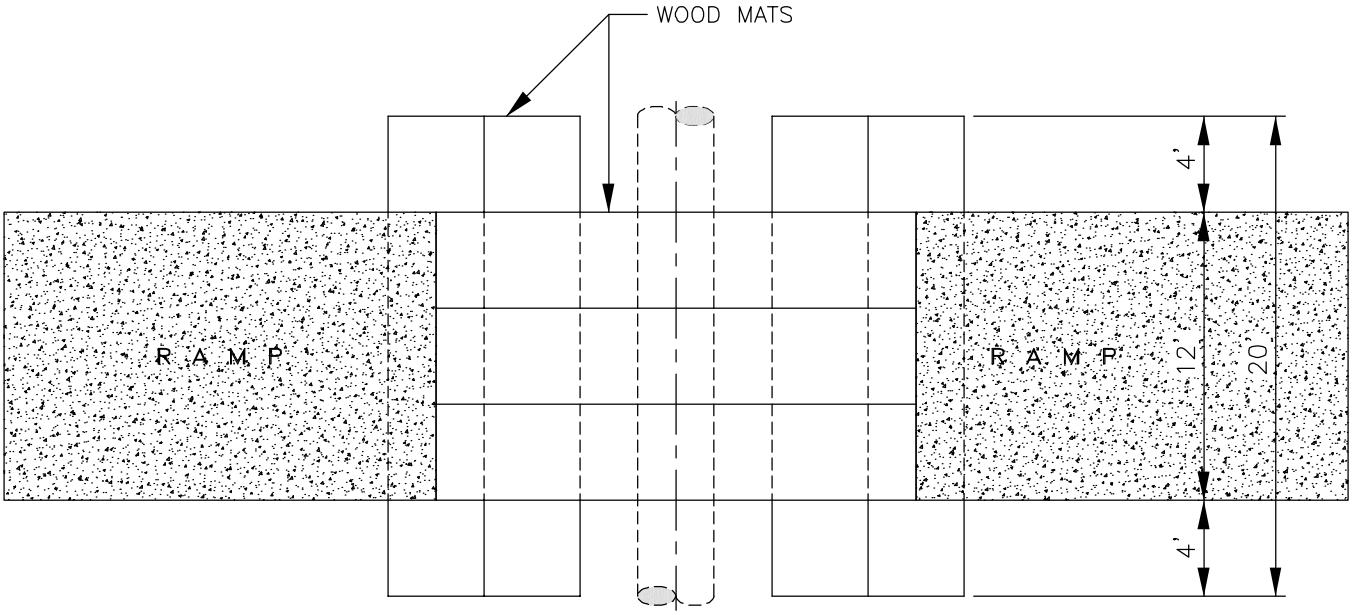


## SIDE VIEW

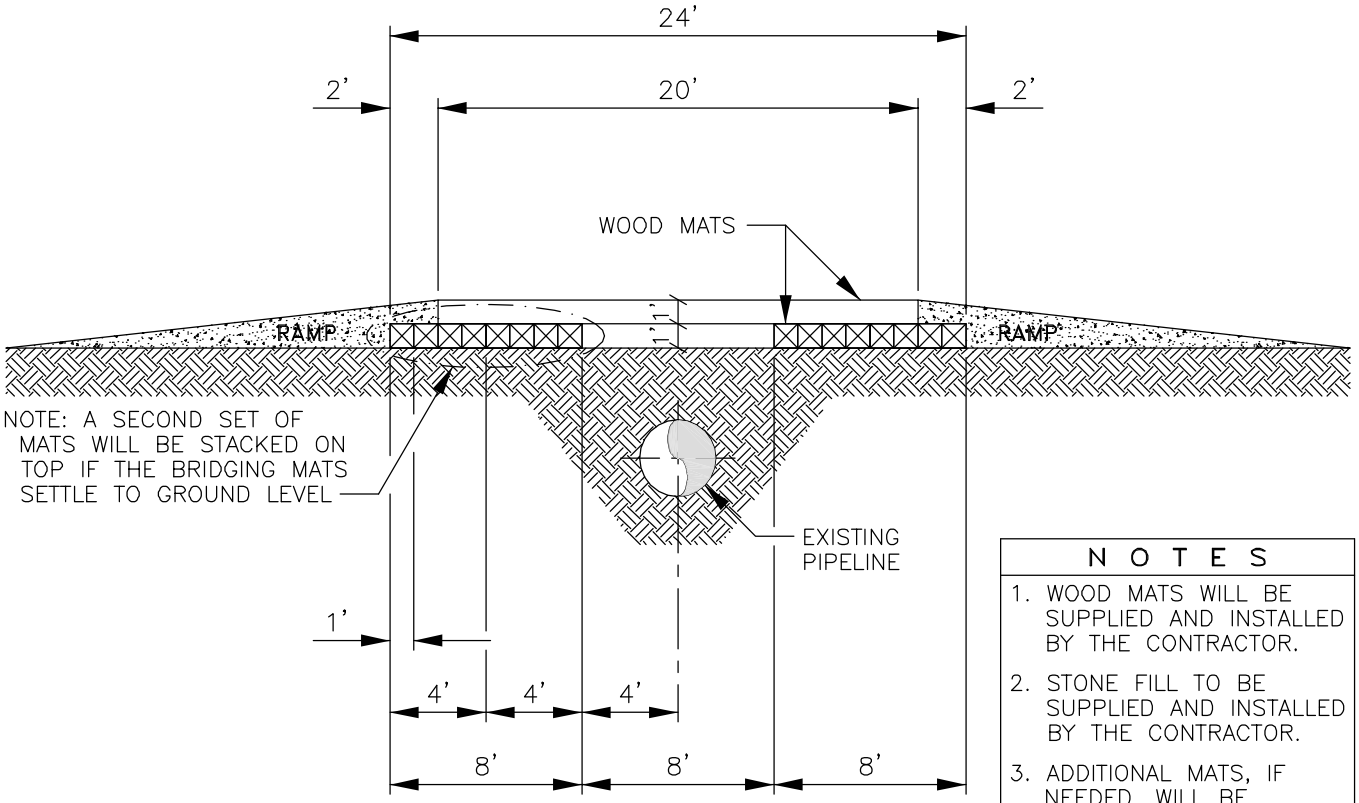


| N O T E S |
|---|
| 1. WOOD MATS WILL BE SUPPLIED AND INSTALLED BY THE CONTRACTOR. |
| 2. STONE FILL TO BE SUPPLIED AND INSTALLED BY THE CONTRACTOR. |
| 3. ADDITIONAL MATS, IF NEEDED, WILL BE SUPPLIED AND INSTALLED BY THE CONTRACTOR. |

| | | | | |
|---|---|---|---|---|
| Empire Pipeline<br>A National Fuel Gas Company | ENGINEERING DEPT.<br>1100 STATE STREET<br>P.O. BOX 2081<br>ERIE, PA. 16512<br>(814) 871-8676 | DRAWN BY: L. A. PHILLIPS<br>FILENAME: EPC\BMP32.dwg<br>DATE: 12/03/2003 | WOODEN MAT BRIDGE<br>PIPELINE CROSSING | DRAWING NUMBER:<br>32 |

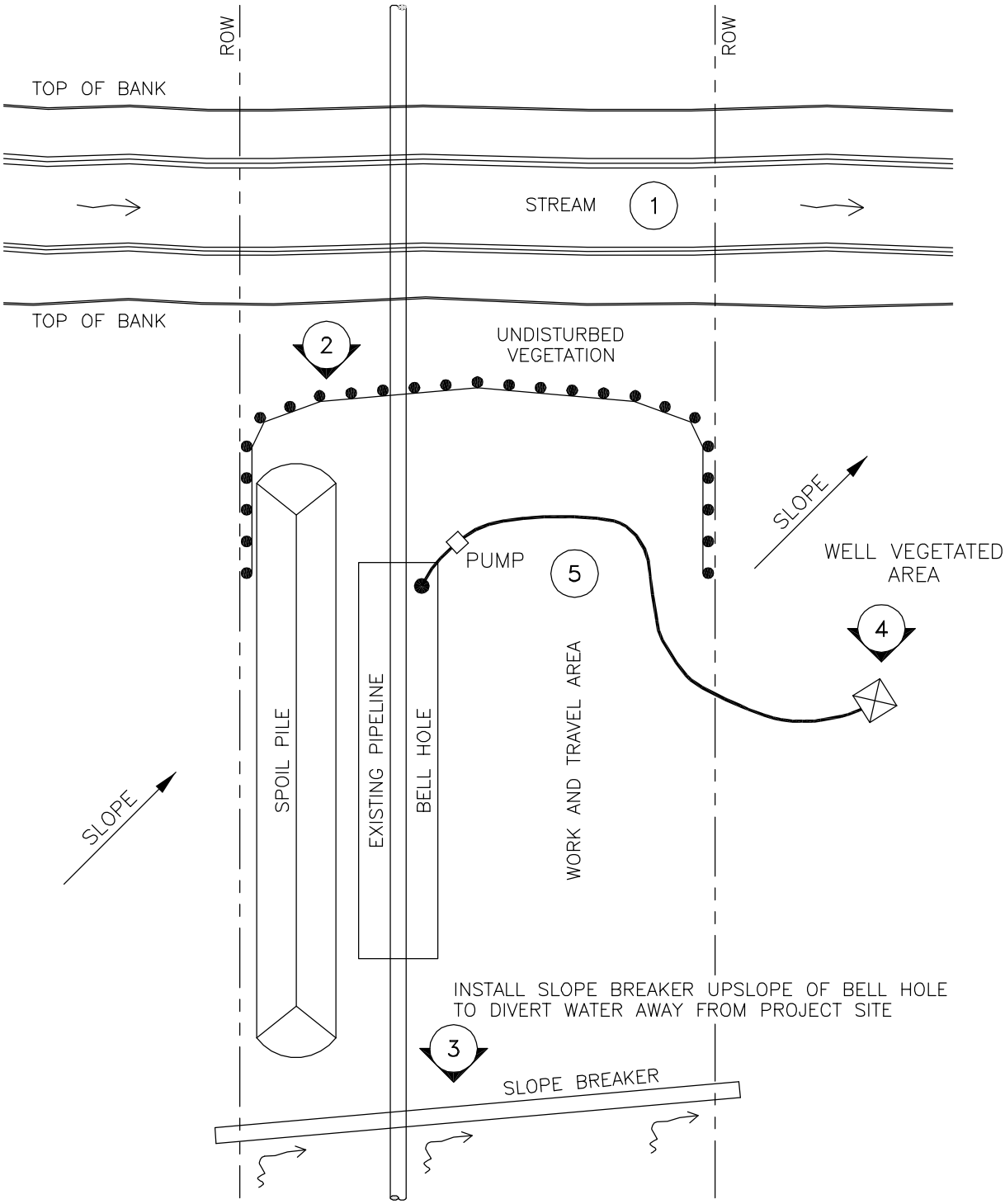


1. SEE BMP DRAWING NO. 9 OR NO. 19 FOR PROPER INSTALLATION.
2. FILTER FENCE, SEE BMP DRAWING NO. 5 FOR PROPER INSTALLATION.
3. SEE BMP DRAWING NO. 8 FOR PROPER INSTALLATION.
4. USE BMP DRAWING NO. 28 OR 31 FOR PROPER METHOD.
5. LIME, FERTILIZE, SEED AND MULCH ALL DISTURBED AREAS IMMEDIATELY AFTER BACKFILLING.

| | | | | |
|---|---|---|---|---|
| Empire Pipeline<br>A National Fuel Gas Company | ENGINEERING DEPT.<br>1100 STATE STREET<br>P.O. BOX 2081<br>ERIE, PA. 16512<br>(814) 871-8676 | DRAWN BY: L. A. PHILLIPS<br>FILENAME: EPC\BMP33.dwg<br>LAST REVISION DATE: 01/23/2004 | BELL HOLE<br>NEXT TO WATERBODY | DRAWING NUMBER:<br>33 |

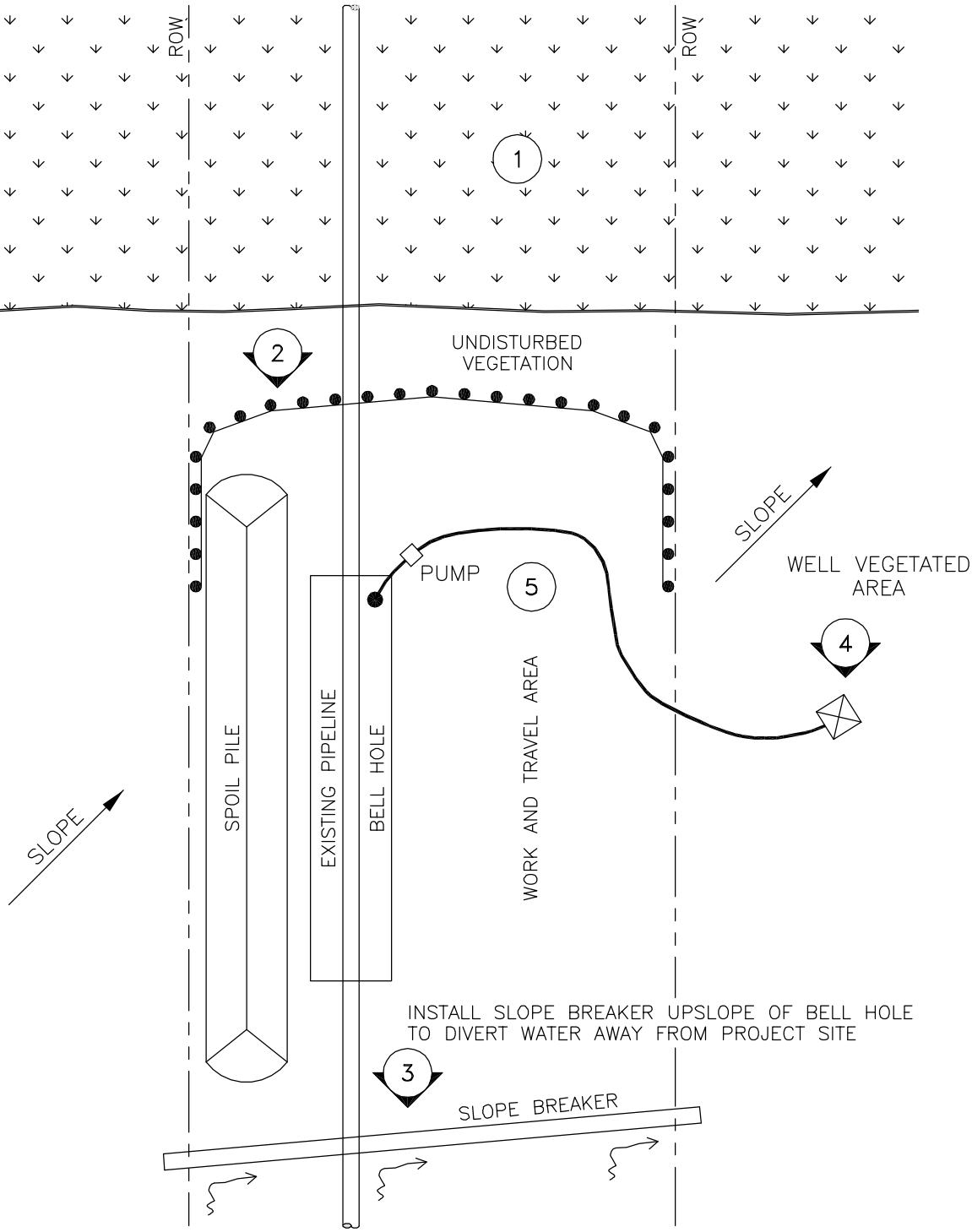


1. SEE BMP DRAWING NO. 4A FOR PROPER INSTALLATION.
2. FILTER FENCE, SEE BMP DRAWING NO. 5 FOR PROPER INSTALLATION.
3. SEE BMP DRAWING NO. 8 FOR PROPER INSTALLATION.
4. USE BMP DRAWING NO. 28 OR 31 FOR PROPER METHOD.
5. LIME, FERTILIZE, SEED AND MULCH ALL DISTURBED NON–WETLAND AREAS IMMEDIATELY AFTER BACKFILLING.

| | | | | |
|---|---|---|---|---|
| Empire Pipeline<br>A National Fuel Gas Company | ENGINEERING DEPT.<br>1100 STATE STREET<br>P.O. BOX 2081<br>ERIE, PA. 16512<br>(814) 871–8676 | DRAWN BY: L. A. PHILLIPS<br>FILENAME: EPC\BMP34.dwg<br>LAST REVISION DATE: 02/23/2005 | BELL HOLE<br>NEXT TO WETLAND | DRAWING NUMBER:<br>34 |

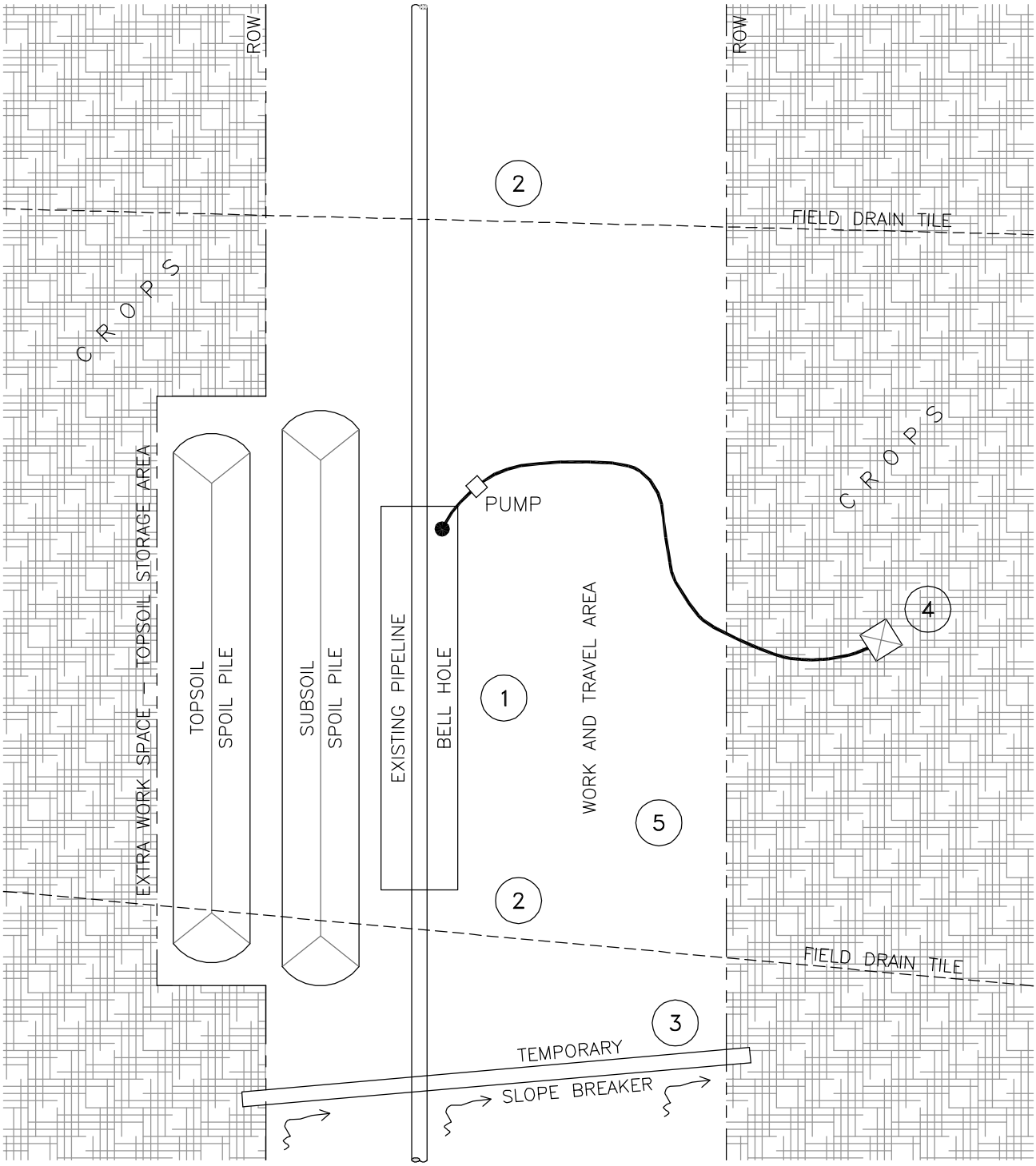


1. SEE BMP DRAWING NO. 23
2. SEE BMP DRAWING NO. 30 FOR REPAIRS.
3. SEE BMP DRAWING NO. 8 FOR PROPER INSTALLATION.
4. USE BMP DRAWING NO. 28 OR 31 FOR PROPER METHOD. ALTERNATIVE DISCHARGE LOCATIONS TO ADJACENT TRENCH SECTIONS OR NON-CROP AREAS MAY BE UTILIZED.
5. SOIL COMPACTION MITIGATION, SECTION 7.4 PAGES 10 AND 11 OF E & S PLAN.

| | | | | |
|---|---|---|---|---|
| Empire Pipeline<br>A National Fuel Gas Company | ENGINEERING DEPT.<br>1100 STATE STREET<br>P.O. BOX 2081<br>ERIE, PA. 16512<br>(814) 871-8676 | DRAWN BY: L. A. PHILLIPS<br>FILENAME: EPC\BMP35.dwg<br>LAST REVISION DATE: 02/23/2005 | BELL HOLE<br>AGRICULTURAL FIELD | DRAWING NUMBER:<br>35 |

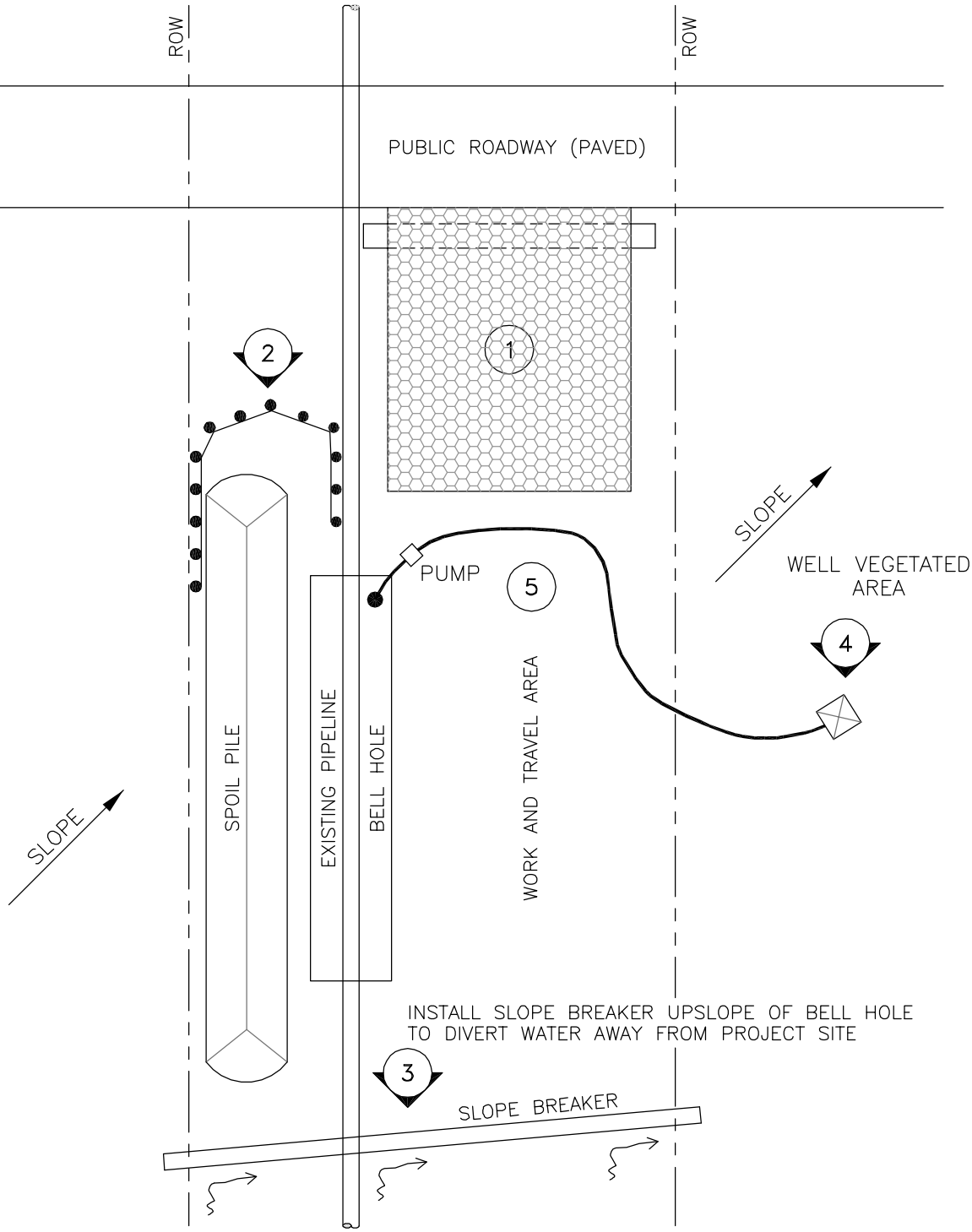


1. SEE BMP DRAWING NO. 1 FOR PROPER INSTALLATION.
2. FILTER FENCE, SEE BMP DRAWING NO. 5 FOR PROPER INSTALLATION.
3. SEE BMP DRAWING NO. 8 FOR PROPER INSTALLATION.
4. USE BMP DRAWING NO. 28 OR 31 FOR PROPER METHOD.
5. LIME, FERTILIZE, SEED AND MULCH ALL DISTURBED AREAS IMMEDIATELY AFTER BACKFILLING.

| | | | | |
|---|---|---|---|---|
| Empire Pipeline<br>A National Fuel Gas Company | ENGINEERING DEPT.<br>1100 STATE STREET<br>P.O. BOX 2081<br>ERIE, PA. 16512<br>(814) 871-8676 | DRAWN BY: L. A. PHILLIPS<br>FILENAME: EPC\BMP36.dwg<br>LAST REVISION DATE: 02/23/2005 | BELL HOLE<br>ADJACENT TO PAVED ROAD | DRAWING NUMBER:<br>36 |

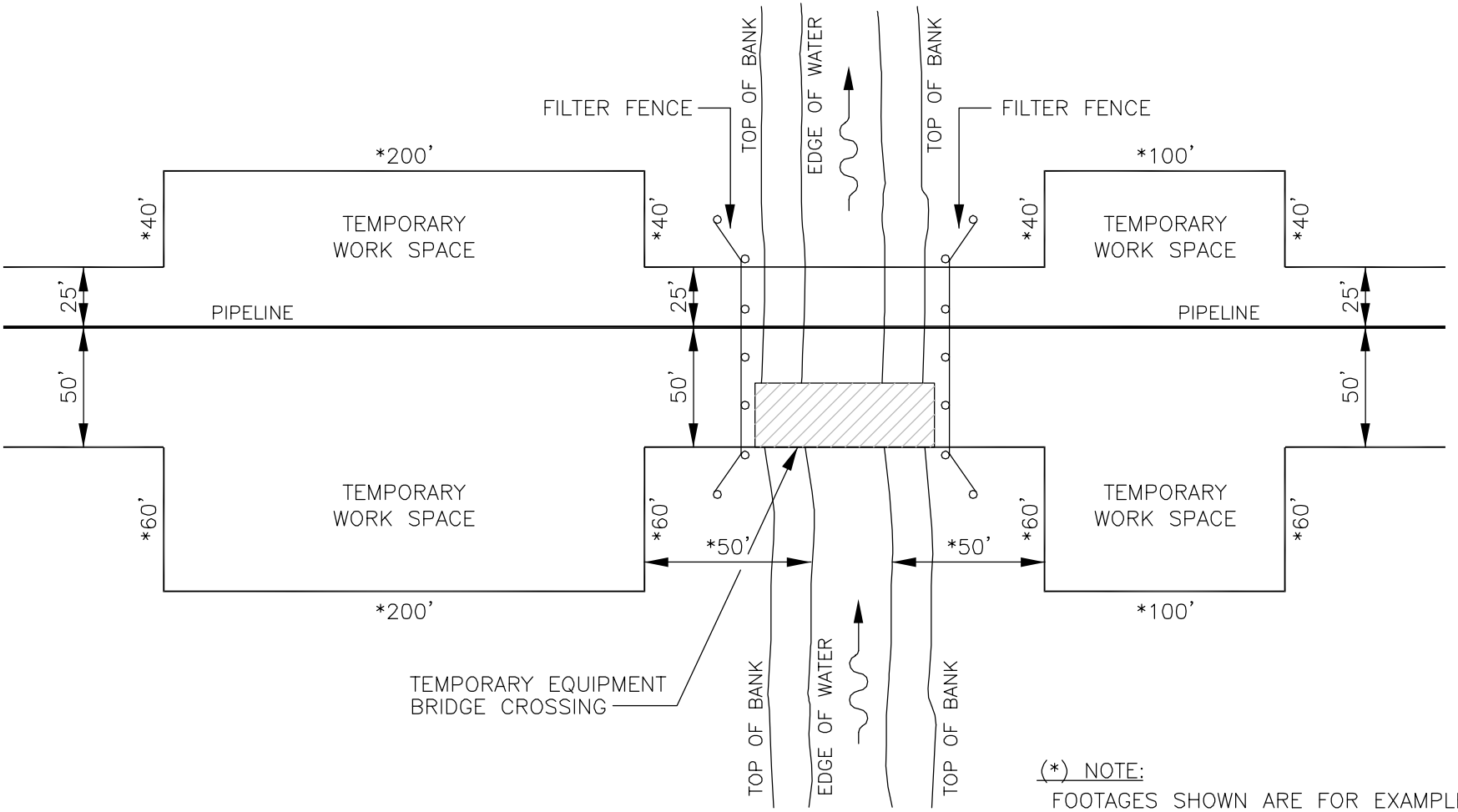


(*) NOTE:
FOOTAGES SHOWN ARE FOR EXAMPLE PURPOSES ONLY. ACTUAL EXTRA WORK SPACE AREAS WILL VARY DEPENDING ON INDIVIDUAL PROJECTS.

| | | | | |
|---|---|---|---|---|
| Empire Pipeline — A National Fuel Gas Company | ENGINEERING DEPT.<br>1100 STATE STREET<br>P.O. BOX 2081<br>ERIE, PA. 16512<br>(814) 871-8676 | DRAWN BY: L. A. PHILLIPS<br>FILENAME: EPC\BMP37.dwg<br>LAST REVISION DATE: 04/11/2005 | EXTRA WORK SPACES | DRAWING NUMBER: 37 |

CREST OF BACKFILL TO BE 8" TO 12" HIGH OVER CENTER LINE OF TRENCH AND FEATHERED OUT TO ZERO 18" TO 24" FROM TRENCH WALL

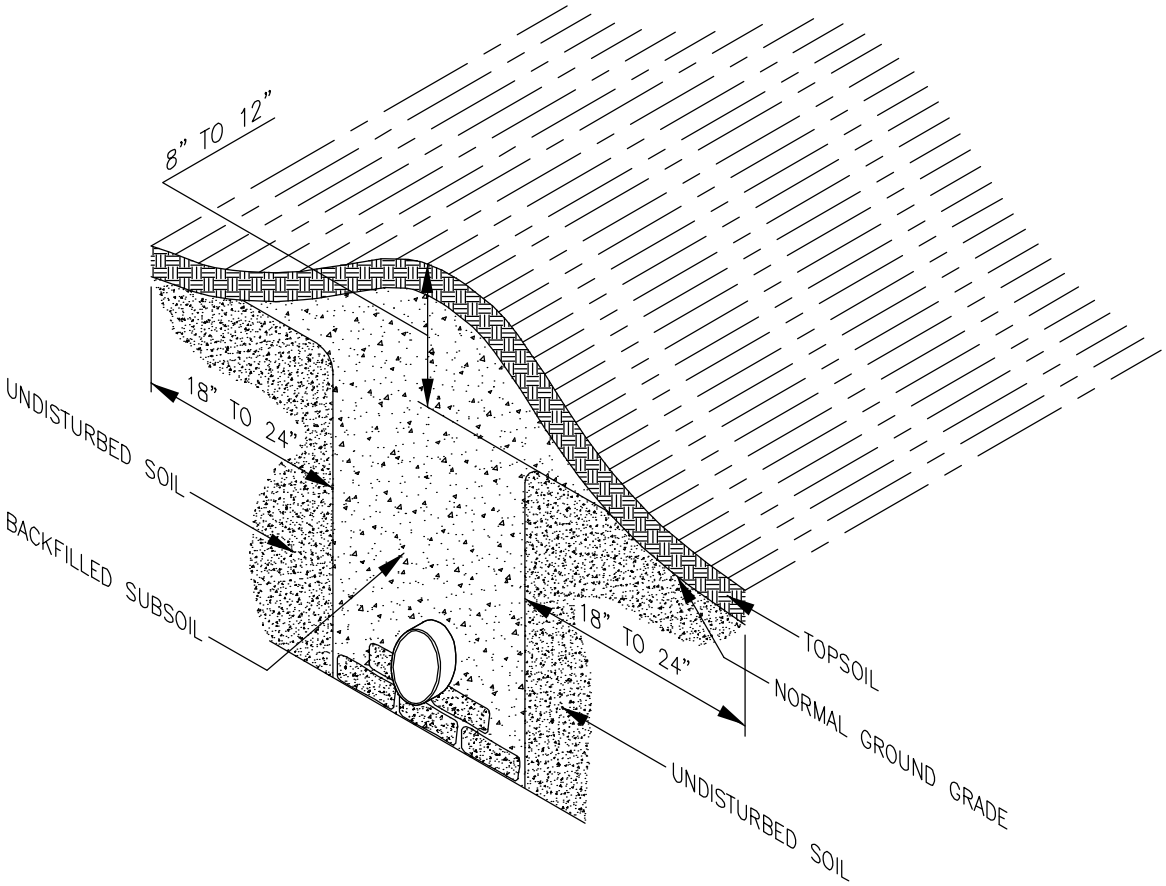


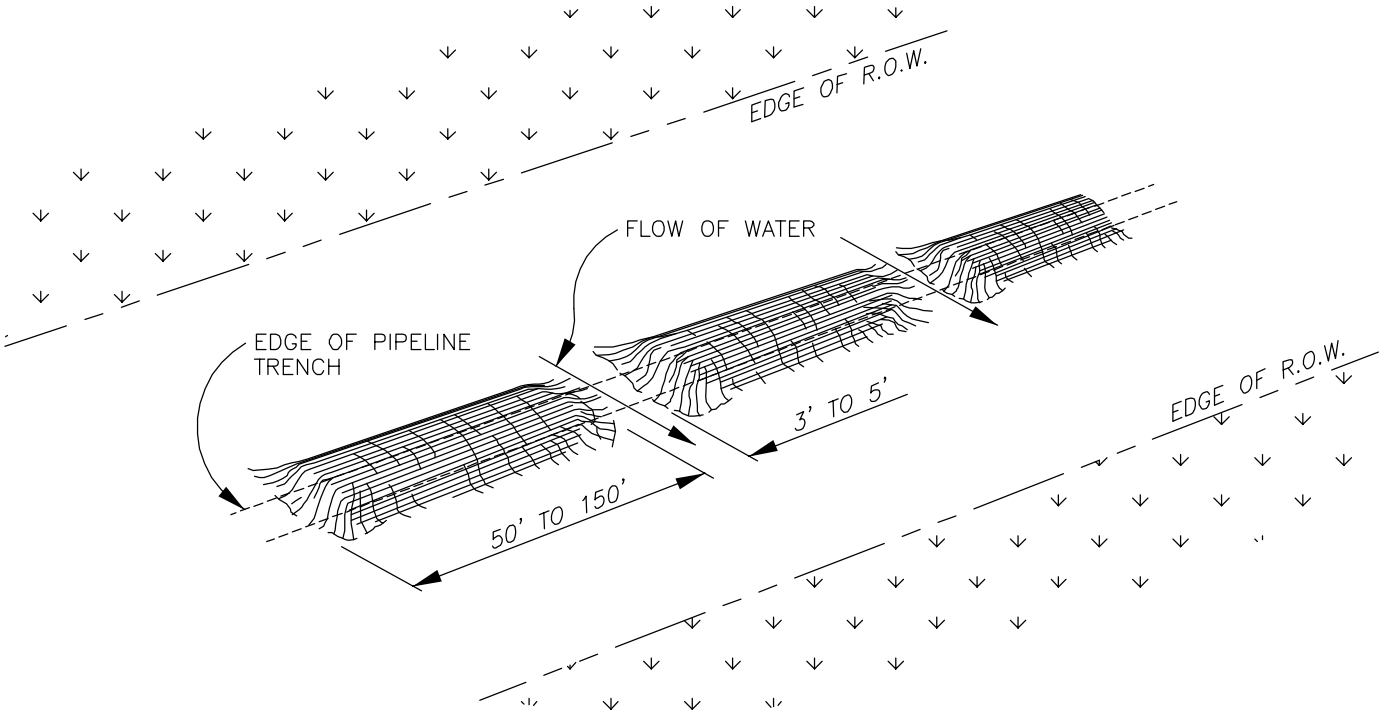


| | | | | |
|---|---|---|---|---|
| Empire Pipeline — A National Fuel Gas Company | ENGINEERING DEPT.<br>1100 STATE STREET<br>P.O. BOX 2081<br>ERIE, PA. 16512<br>(814) 871-8676 | DRAWN BY: L. A. PHILLIPS<br>FILENAME: EPC\BMP38.dwg<br>DATE: 04/04/2005 | RIGHT-OF-WAY CROWNING | DRAWING NUMBER: 38 |

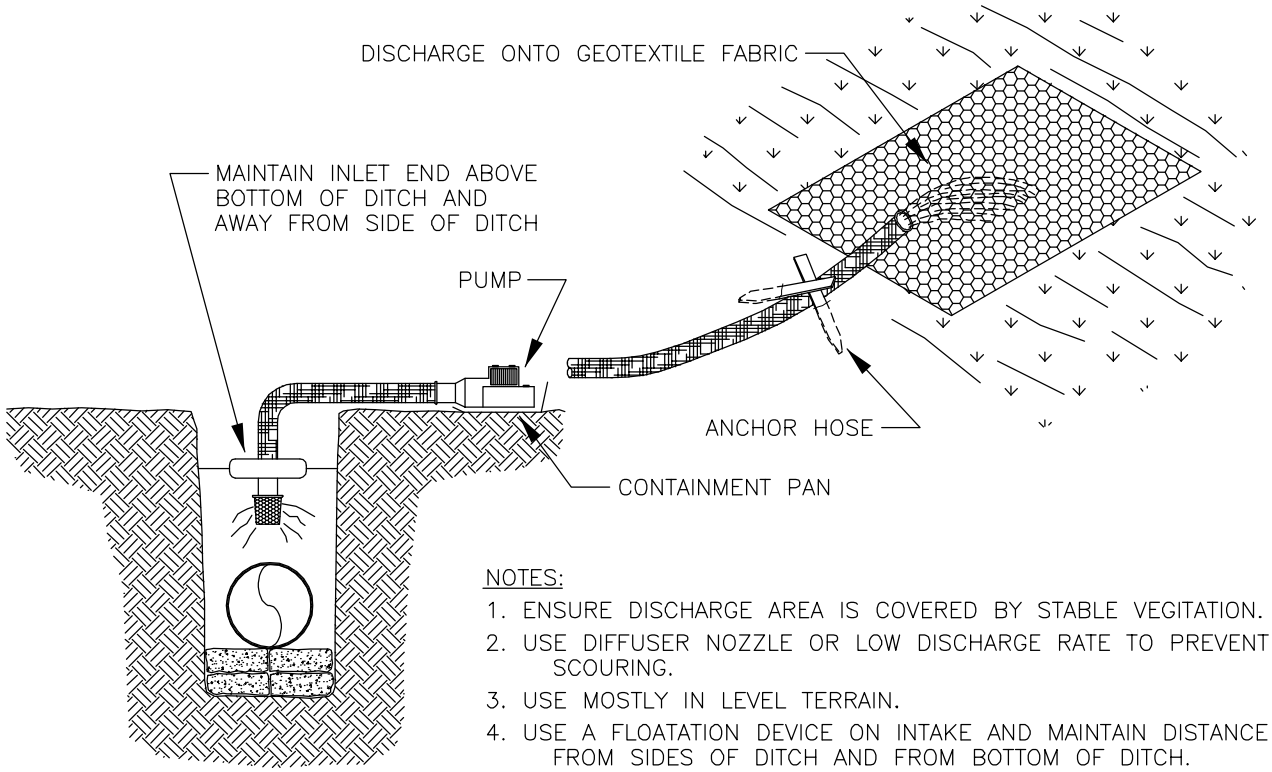


NOTES:

1. ENSURE DISCHARGE AREA IS COVERED BY STABLE VEGITATION.
2. USE DIFFUSER NOZZLE OR LOW DISCHARGE RATE TO PREVENT SCOURING.
3. USE MOSTLY IN LEVEL TERRAIN.
4. USE A FLOATATION DEVICE ON INTAKE AND MAINTAIN DISTANCE FROM SIDES OF DITCH AND FROM BOTTOM OF DITCH.

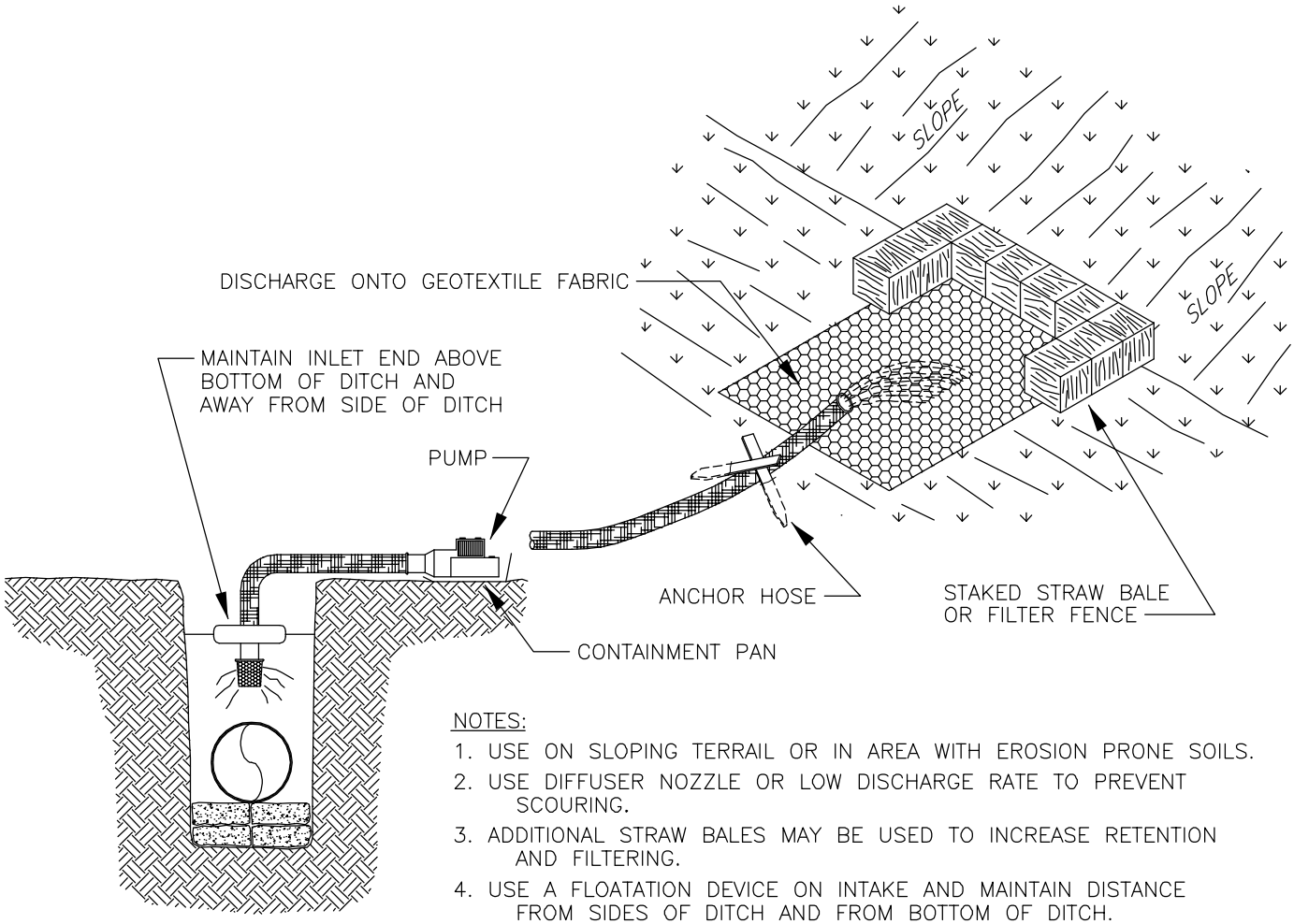


NOTES:

1. USE ON SLOPING TERRAIL OR IN AREA WITH EROSION PRONE SOILS.
2. USE DIFFUSER NOZZLE OR LOW DISCHARGE RATE TO PREVENT SCOURING.
3. ADDITIONAL STRAW BALES MAY BE USED TO INCREASE RETENTION AND FILTERING.
4. USE A FLOATATION DEVICE ON INTAKE AND MAINTAIN DISTANCE FROM SIDES OF DITCH AND FROM BOTTOM OF DITCH.

| | | | | |
|---|---|---|---|---|
| Empire Pipeline<br>A National Fuel Gas Company | ENGINEERING DEPT.<br>1100 STATE STREET<br>P.O. BOX 2081<br>ERIE, PA. 16512<br>(814) 871-8676 | DRAWN BY: L. A. PHILLIPS<br>FILENAME: EPC\BMP39.dwg<br>DATE: 04/06/2005 | DISCHARGE METHOD FOR TRENCH DEWATERING | DRAWING NUMBER: 39 |

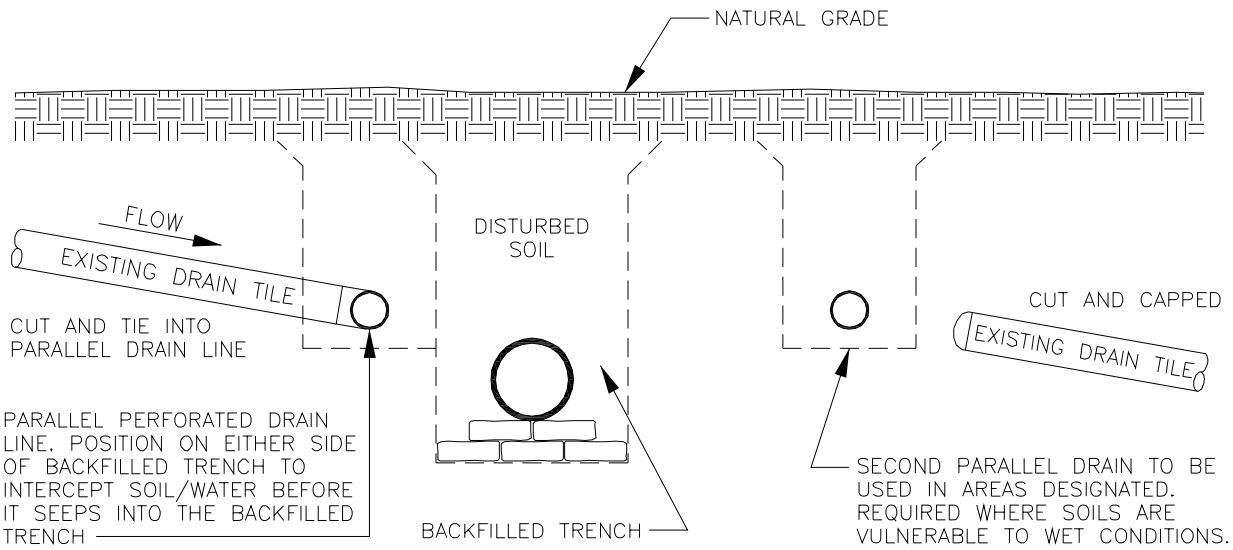


NOTE:

1. PARALLEL DRAINAGE TILE INSTALLATION TO BE APPROVED FOR SITE SPECIFIC AGRICULTURAL SOILS WHERE REPAIR OF EXISTING CROSS TILES WOULD BE LESS EFFECTIVE FOR EXAMPLE:
   A. SHALLOW BEDROCK.
   B. INTERFERENCE BY OTHER UTILITY LINES.
   C. TO HEADER CLOSELY SPACED SHALLOW TILES AND FRENCH DRAINS.
2. PARALLEL/NEW SUBMAIN TILE INSTALLATION MUST ACCOUNT FOR THE ISSUE OF LONG-TERM ROW SATURATION; AND MUST BE APPROVED BY THE AGRICULTURAL DRAINAGE SPECIALIST.

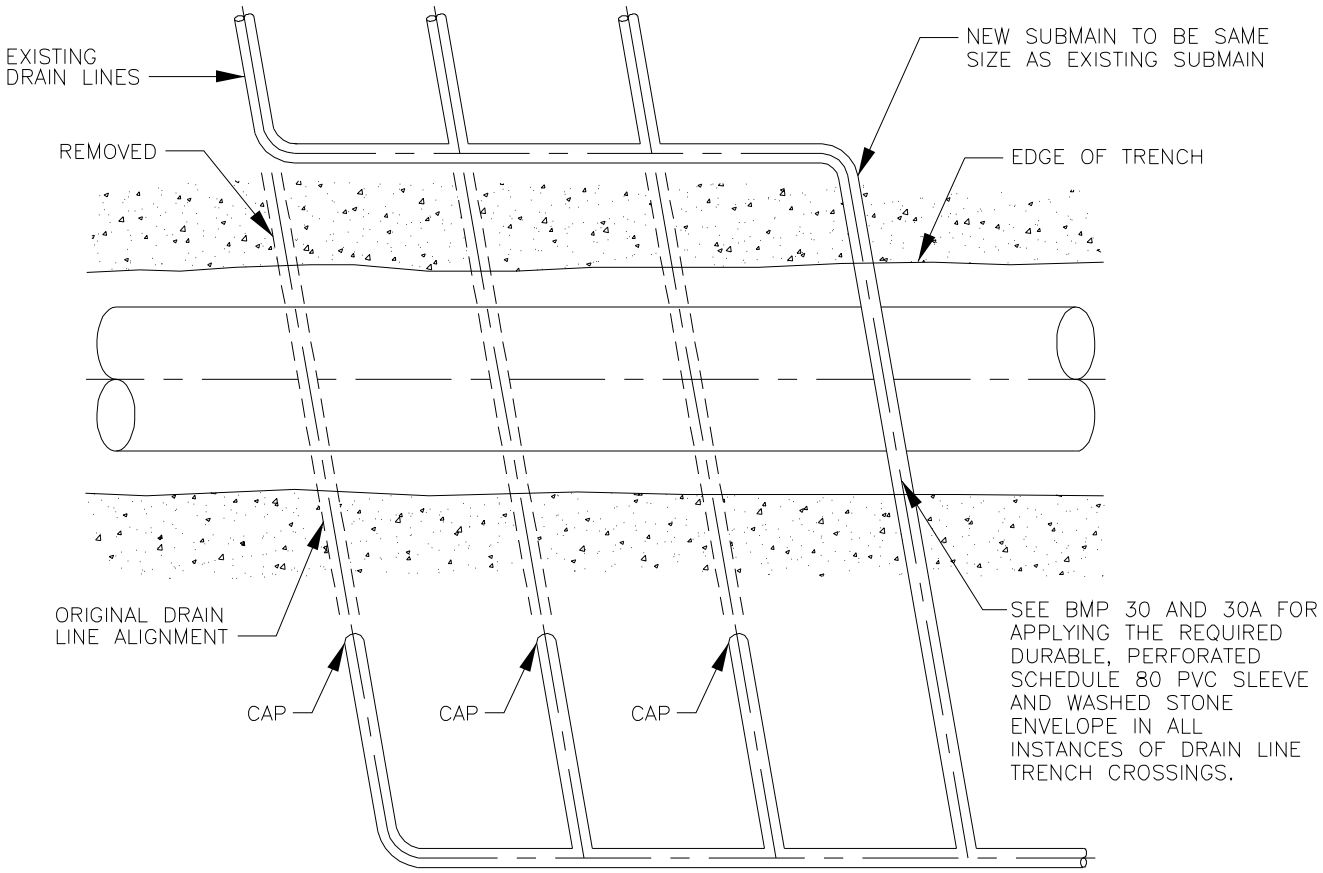


PLAN VIEW TILE SYSTEM WITH NEW SUBMAIN

| | | | | |
|---|---|---|---|---|
| empire pipeline<br>A National Fuel Gas Company | ENGINEERING DEPT.<br>1100 STATE STREET<br>P.O. BOX 2081<br>ERIE, PA. 16512<br>(814) 871-8676 | DRAWN BY: L. A. PHILLIPS<br>FILENAME: EPC\BMP40.dwg<br>DATE: 05/11/2006 | PARALLEL/NEW SUBMAIN TILE INSTALLATION | DRAWING NUMBER: 40 |

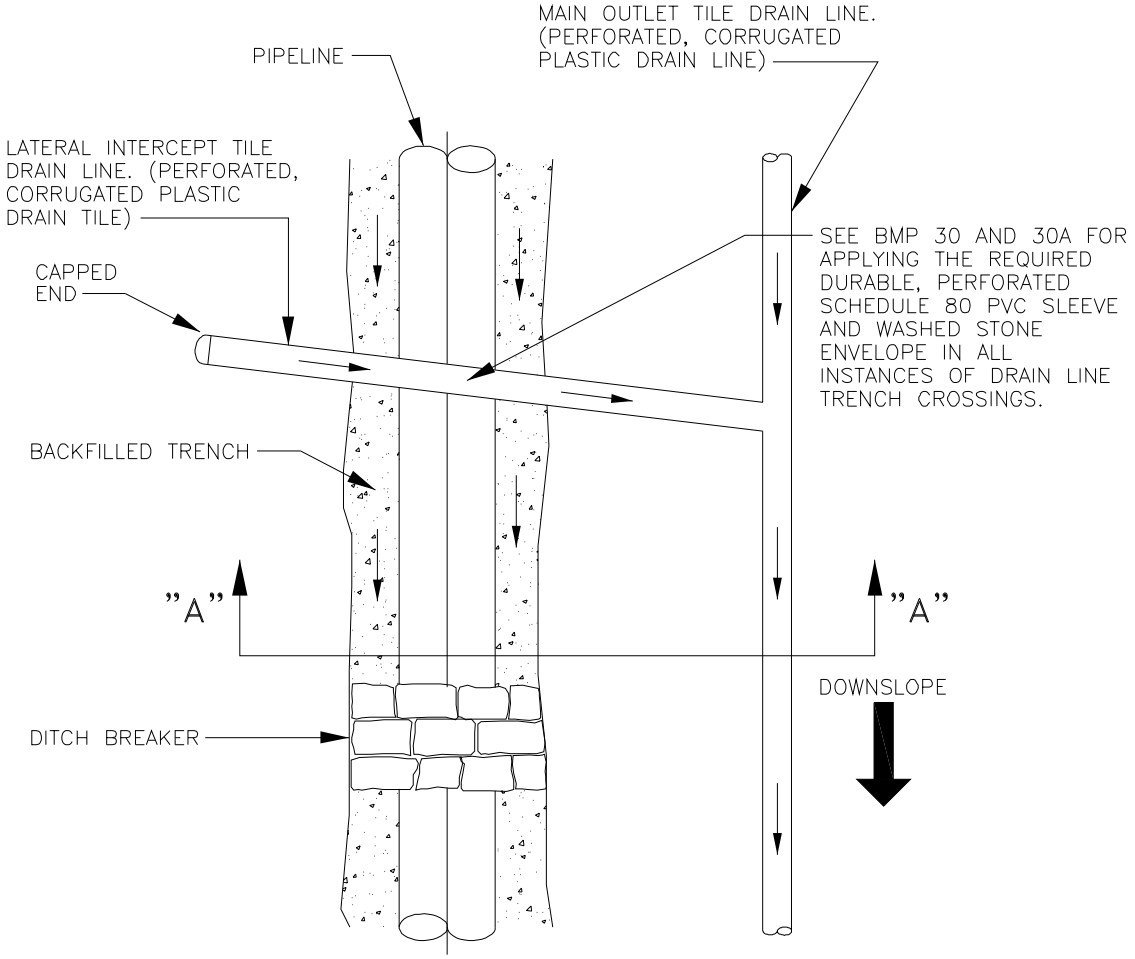


PLAN

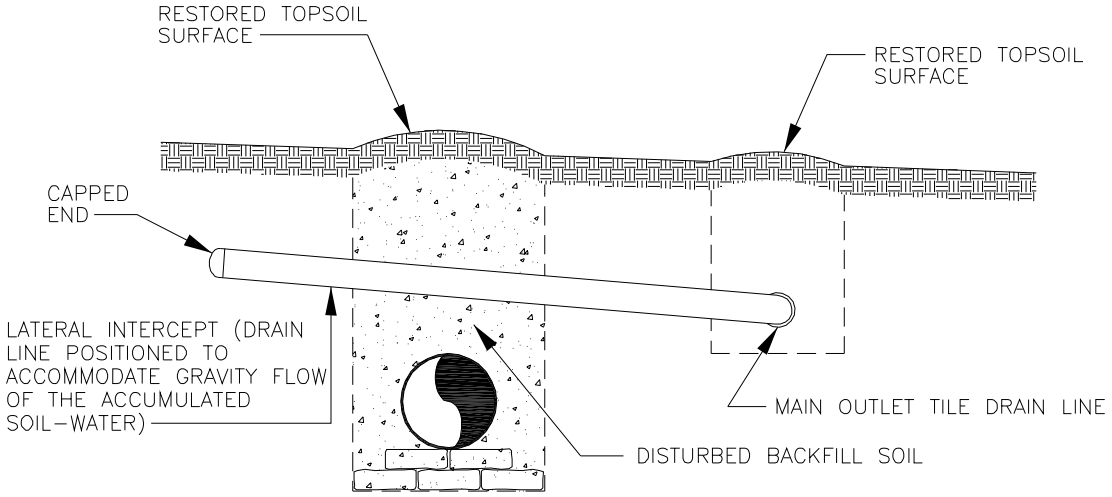


PROFILE – SECTION "A"–"A"

NOTES:

1. DITCH BREAKERS PREVENT GULLY EROSION WHILE TRENCH IS OPEN AND HELP INHIBIT WATER PIPING AND WATER BLOWOUTS DOWN THE COURSE OF THE PIPELINE AFTER BACKFILLING.
2. INTERCEPT DRAIN LINES ABSORB THE SOIL AND WATER WHICH DRAIN NATURALLY FROM THE UNDISTURBED SOIL PROFILE INTO THE DISTURBED BACKFILL SOIL MATERIAL OF THE TRENCH. THE INTERCEPT DRAIN LINES HELP PREVENT SATURATED SOIL CONDITIONS.
3. AGRICULTURAL CROPLAND MAY REQUIRE CROSS TRENCH DRAINAGE OR PARALLEL DRAINAGE.

| | | | | |
|---|---|---|---|---|
| Empire Pipeline<br>A National Fuel Gas Company | ENGINEERING DEPT.<br>1100 STATE STREET<br>P.O. BOX 2081<br>ERIE, PA. 16512<br>(814) 871-8676 | DRAWN BY: L. A. PHILLIPS<br>FILENAME: EPC\BMP41.dwg<br>DATE: 05/11/2006 | LATERAL INTERCEPT DRAIN | DRAWING NUMBER: 41 |

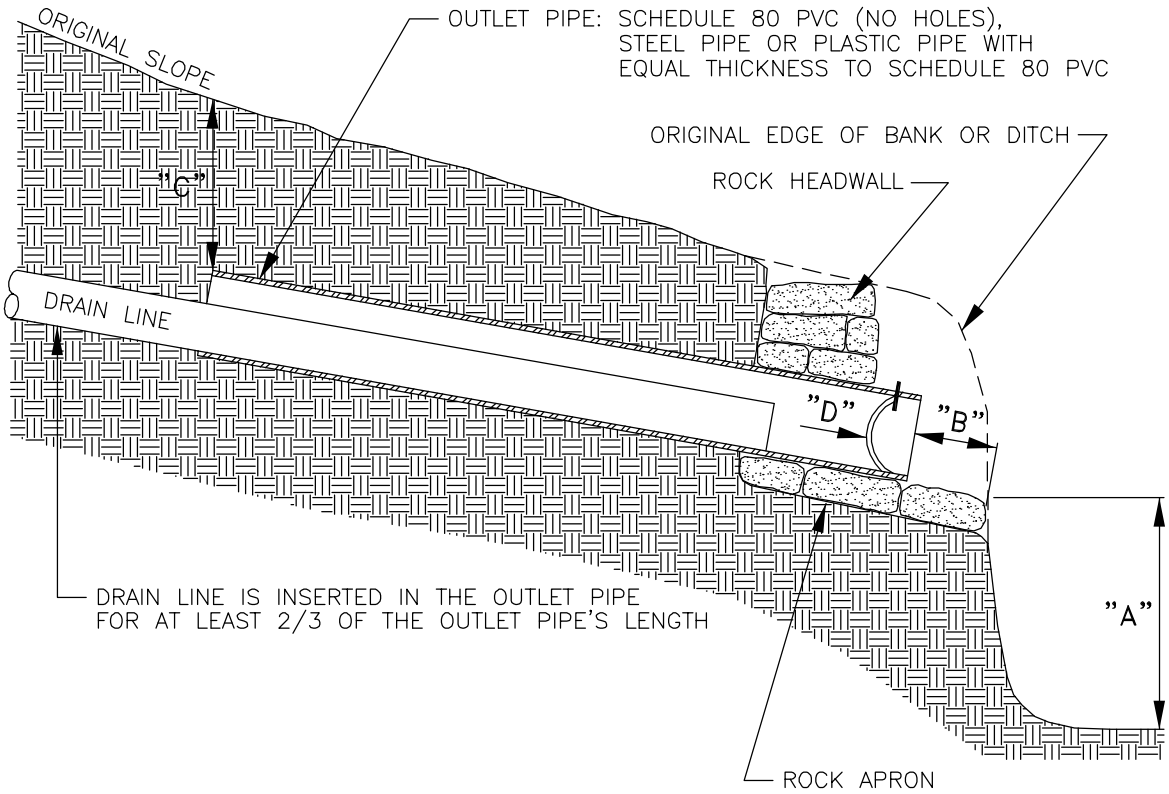


"A" – THE FREE DROP OR OUTFALL DISTANCE OF THE DRAINAGE WATER TO ITS UNRESTRICTED (FREE) DAYLIGHT OUTLET. GUIDELINE IS 2 FEET BUT NOT LESS THAN 1 FOOT WITHOUT SPECIAL DESIGN APPROVAL.

"B" – THE RECESS BACK FROM THE EDGE OF THE BANK OR DITCH OR OTHER POINT OF DAYLIGHT. GUIDLINE IS 2 FEET RECESSED BACK TO AVOID FUTURE DAMAGE.

"C" – THE MINIMUM DEPTH OF COVER OVER THE DRAIN LINE AT WHICH THE OUTLET PIPE MUST BEGIN. THE MINIMUM IS 2 FEET.

"D" – AN INTERNALLY HINGED ANIMAL (RODENT) GUARD, BOLTED FROM THE OUTSIDE. MOUNT THE GUARD 4"–6" BACK INSIDE THE OUTLET PIPE.

| | | | | |
|---|---|---|---|---|
| Empire Pipeline<br>A National Fuel Gas Company | ENGINEERING DEPT.<br>1100 STATE STREET<br>P.O. BOX 2081<br>ERIE, PA. 16512<br>(814) 871–8676 | DRAWN BY: L. A. PHILLIPS<br>FILENAME: EPC\BMP42.dwg<br>DATE: 06/24/2005 | TYPICAL DRAIN TILE OUTLET | DRAWING NUMBER:<br>42 |

DIVERSION TERRACE REPAIR – VERTICAL SIDE VIEW

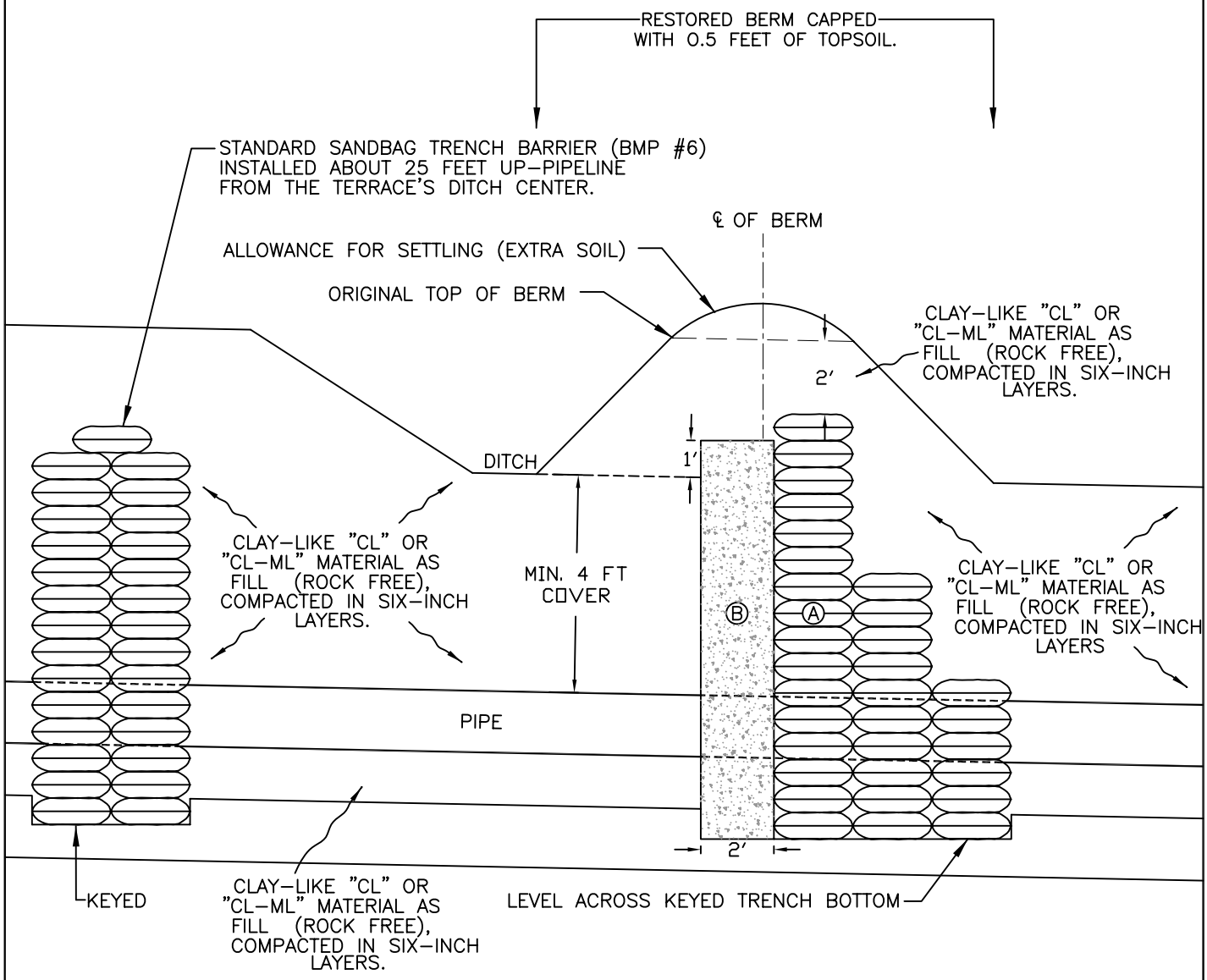


NOTES:

1. ALL CLAY–LIKE "CL" OR "CL–ML" MATERIAL USED FOR DIVERSION TERRACE RE–ENGINEERED REPAIR / RECONSTRUCTION WILL BE VERIFIED BY THE INSPECTOR TO ENSURE THE MATERIAL IS ROCK–FREE (NO STONES / ROCKS LARGER THAN 3–4 INCHES), AND DOES NOT CONTAIN ANY TOPSOIL NOR OTHER ORGANIC MATERIALS (E.G.: CLUMPS OF SOD, TREE AND BRUSH ROOTS). THE CLAY–LIKE "CL" OR "CL–ML" MATERIAL SHALL BE COMPACTED AT ALL AREAS IN SIX–INCH LIFTS WHEN THE MATERIAL IS MOIST; NOT WET NOR DRY. THE MAJORITY OF COMPACTION SHALL BE ACHIEVED INSIDE THE TRENCH ZONE, WITH A VIBRATORY JUMPER COMPACTOR; AND MAY INCLUDE FINAL SURFACE COMPACTION OF BERM WITH SHEEPSFOOT ROLLER.

Ⓐ SANDBAG TRENCH BARRIER SNUGLY EMPLACED WITH 3 BAGS ACROSS THE BOTTOM WIDTH AS WELL AS AROUND THE PIPE AND OTHER LOWER LAYERS TO MID–LEVEL; 2 BAGS WIDTH ABOVE MID–LEVEL; AND 1 BAG WIDTH ACROSS UPPER SECTION.

Ⓑ CONCRETE–GRADE SAND APPLIED IN SIX–INCH LIFTS, EACH LIFT COMPACTED WITH A VIBRATORY JUMPER–COMPACTOR (E.G. WACKER WITH AN 8" X 10" COMPACTOR PAD). MINIMUM WIDTH OF THE SAND COLUMN IS TWO (2) FEET ACROSS FOR ENTIRE HEIGHT (BOTTOM TO TOP). THE SAND MATERIAL SHOULD BE COMPACTED WHEN MOIST BUT NOT WHEN DRY NOR WET.

| | | | | |
|---|---|---|---|---|
| Empire Pipeline — A National Fuel Gas Company | | DRAWN BY: D. SANDY (H&A)<br>FILENAME: Profile.dwg<br>LAST REVISION DATE: 04/18/06 | DIVERSION TERRACE REPAIR | DRAWING NUMBER: 43 |

TOP VIEW OF CORE SECTION REPAIR OF DIVERSION TERRACE BERM
PRIOR TO THE RECONSTRUCTION OF THE BREACH

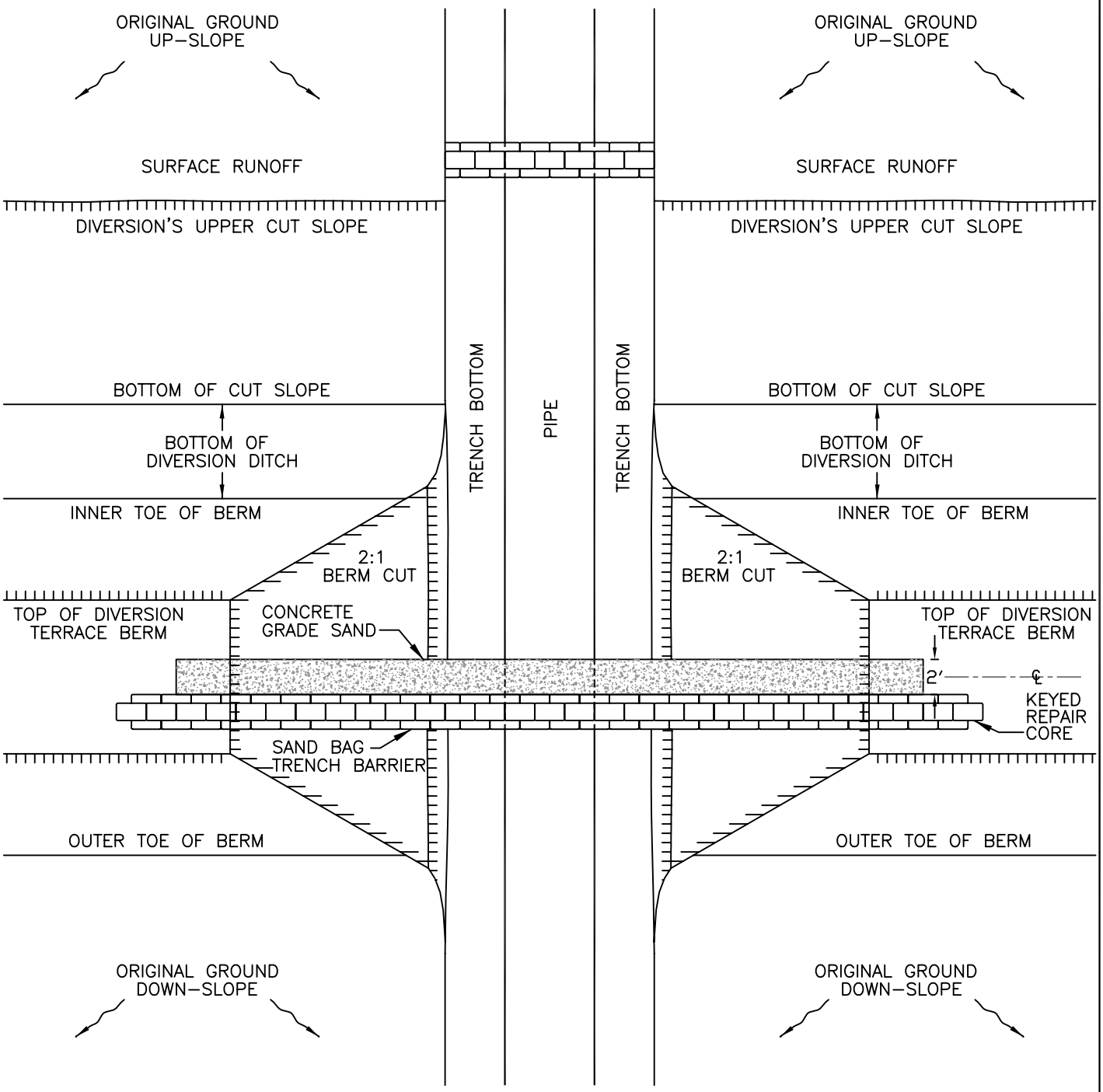


NOTE: KEYED–BACK CORE REPAIR
ORIGINAL BERM TEN FEET NOMINAL
BEYOND THE 2:1 BERM CUT

| | | | | |
|---|---|---|---|---|
| Empire Pipeline — A National Fuel Gas Company | | DRAWN BY: D. SANDY (H&A)<br>FILENAME: Plan.dwg<br>LAST REVISION DATE: 04/18/06 | DIVERSION TERRACE REPAIR | DRAWING NUMBER: 43a |

## DIVERSION TERRACE TIMBER MAT BRIDGE SIDE VIEW

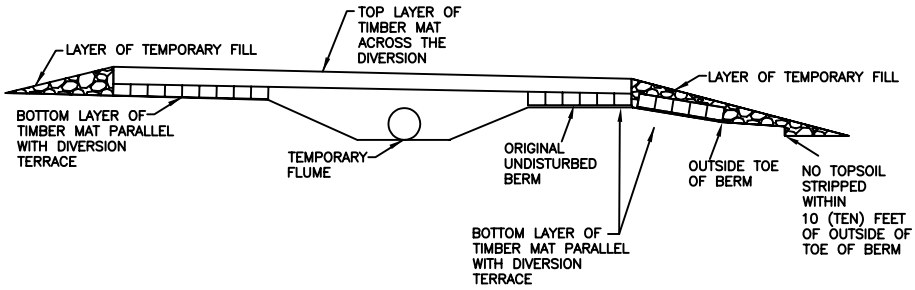


## TOP VIEW OF DEIVERSION BERM REPAIR AND TIMBER MAT BRIDGE

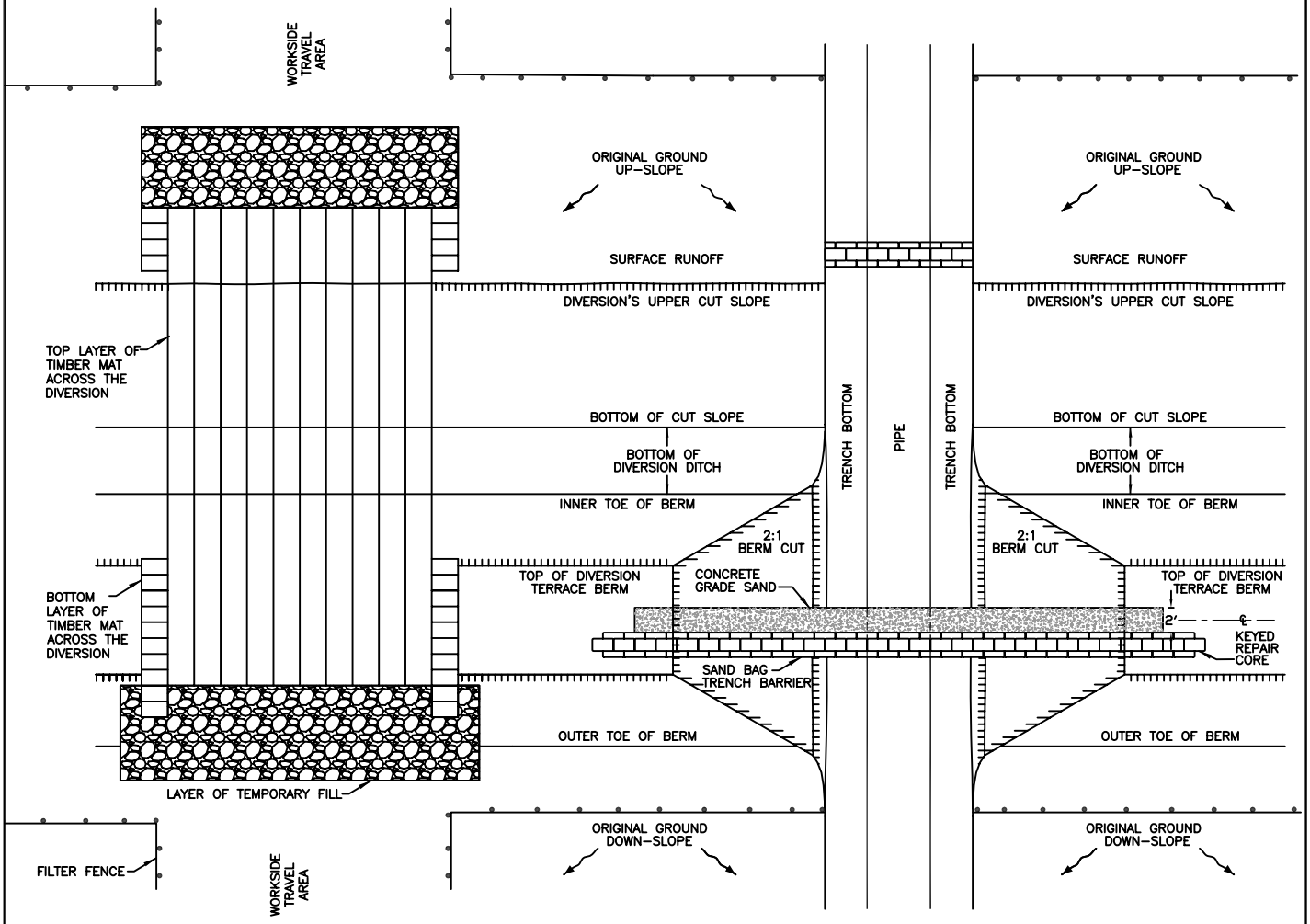


NOTES:

1. THE ONLY PORTION OF DIVERSION TO BE DISTURBED IS THE PIPELINE TRENCH AND THE 2:1 BERM CUT, DURING CONSTRUCTION; AND THE BERM'S KEYED-IN REPAIR CORE DURING THE RECONSTRUCTION OF THE DIVERSION TERRACE.
2. ALL OTHER ORIGINAL FEATURES OF THE DIVERSION TERRACE ARE PROTECTED THROUGHOUT THE RIGHT OF WAYS CONSTRUCTION AND RESTORATION STAGES OF WORK AND ACCESS BT TEMPORARY FILL LAYERS AND TIMBER BRIDGING.
3. A TEMPORARY FLUME WILL BE MAINTAINED UNTIL THE DIVERSION TERRACE IS FULLY RECONSTRUCTED.
4. FILTER FENCE WILL BE INSTALLED AT THE UPSLOPE AND DOWNSLOPE SIDES OF THE DIVERSION BERM (AT THE LIMITS OF THE TOPSOIL STRIPPING) TI LIMIT ACCESS AND DISTURBANCE.

| | | | | |
|---|---|---|---|---|
| Empire Pipeline — A National Fuel Gas Company | | DRAWN BY: T. HARRIS (H&A)<br>FILENAME: Plan.dwg<br>LAST REVISION DATE: 04/18/06 | DIVERSION TERRACE PROTECTION AND MAT | DRAWING NUMBER: 43b |

**Attachment 3**

**Special Crop Productivity Monitoring Procedures**

# SPECIAL CROP PRODUCTIVITY MONITORING PROCEDURES

February 1993

Provided by:

NYS Dept. of Agriculture & Markets
10-B Airline Drive
Albany NY 12235-0001

The following outline explains the method the agriculture specialists should use to compare crop yields on and off the right-of-way. It is important that the specialist use sound judgment when selecting areas to sample. These areas should be representative of the field and should have similar soil types, drainage characteristics, and topography.

Evaluating Corn Crops

1) Plant Population

   a) Check the plant population in the corn fields in late May or early June.

   b) Count the number of plants in an area equal to 1/1000 of an acre (see table below). A population count should be done for the spoil area, the trench area, and the traffic area of the right-of-way. Do the same for the unaffected field.

Row Length to Sample 1/1000 Acre

| Row Width Inches | Length of Row |
|---|---|
| 42 | 12′ 5″ |
| 40 | 13′ 1″ |
| 38 | 13′ 9″ |
| 36 | 14′ 6″ |
| 34 | 15′ 5″ |
| 32 | 16′ 4″ |
| 30 | 17′ 5″ |

   c) Repeat the population counts for two other locations along the right-of-way in the same field.

   d) Average the population counts from on the right-of-way and convert to plants per acre. Do the same for counts from off the right-of-way.

2) General Appearance

   a) observe the fields in late July/early August and note any visual differences in population, color, and size on and off the right-of-way.

3) Yield

   a) Record differences in general appearance on and off the right-of-way during early September (silage) or early October (grain corn).

   b) Select sample plots using the same method as in 1b, above. Count the number of ears in each sample area. Count the number of rows

of kernels and the number of kernels per row on at least three of the ears in the sample area. Kernels at the tip of the ear that are less than 1/2 normal size should not be counted.

c) Multiply the number of ears x the number of rows of kernels x the number of kernels per row x 0.01116 = bushels per acre.[1]

d) Average the results from the three ears from one sample plot. Average the results from the nine sample plots on the right-of-way, do the same for the three sample plots off right-of-way (see example below).

Examples of corn yield estimates:

Row width = 30″ Length of Row = 17′ 5″ #of ears in row = 21

| | Ear #1 | Ear #2 | Ear #3 |
|---|---|---|---|
| Rows of Kernels | 12 | 10 | 10 |
| Kernels/Row | 40 | 38 | 44 |

21 x 40 x 12 x .0116 = 116.9 bu/ac
21 x 38 x 10 x .0116 = 92.6 bu/ac
21 x 44 x 10 x .0116 = 107.2 bu/ac

Avg. yield for plot #1 = 105.5 bu/ac

Evaluating Small Grains

1) Plant Population

a) Check populations in October (winter grains) or mid/late May (spring grains). Population counts should be done for the spoil area, trench area, the traffic area, and the unaffected field. Count the number of plants in 1/10,000 of an acre (2.09′ x 2.09′). Repeat the population counts at the other two locations in the same field.

2) General Appearance

a) Observe the fields in June or early July and record any visual differences in color, size, and plant population on and off the right-of-way.

3) Yield

a) Harvest the crop for yield checks in mid July/early August (earlier for winter grains).

[1] Corn yields are calculated at 15.5% moisture.

b) Select sample plots using the same method that was used for the population checks.

c) Cut the crop from the sample plot by hand approximately three inches above the ground.

d) Separate the grain, weigh, test for moisture level, and average the results from on the right-of-way. Convert the results to bushels per acre and compare (see example below).

Yield estimate for small grains:

Plot size = 1/10,000 of an acre

crop – wheat Avg. weight = 60 lbs./bu

Sample weight = .25 lbs.
Moisture level = 22%
Ideal harvest moisture = 12%

22% - 12% = 8%
.25 lbs. x 8% = .02 lbs.
.25 lbs. - .02 lbs. = .23 lbs
.23 lbs. x 10,000 = 2300 lbs./ac
2300 lbs/ac : 60 lbs/bu = 38.3 bu/ac

Evaluating Soybeans

1) Plant Population

a) Check the plant populations in late June/early July. If the soybeans are planted in rows use the same method that is used for corn. If the beans are planted with closer spacing use the method for small grains (2.09′ x 2.09′).

2) General Appearance

a) Check the general appearance in early August, note any visual differences in population, color, and size on and off the right-of-way.

3) Yield

a) Harvest the plants in late September and early October. If the soybeans are planted in rows use the same method that is used for corn. If they are planted with closer spacing use the method for small grains.

b) Separate the beans, weigh them, and test for moisture. Average the results for the sample areas on the right-of-way using the same method that was used for small grains. Do the same for the areas off the right-of-way.

c) Convert to bushels per acre.

Evaluating Hay Crops

1) Plant Population

a) It is not necessary to do population counts for hay crops, however, the agricultural specialist will need to note the percentage of alfalfa in mixed stands on and off the right-of-way.

b) Any visible difference in populations of pure alfalfa stands should also be noted.

2) General Appearance

a) The general appearance of hay stands should be recorded in late spring, mid summer, and late summer. Any differences in color, height, and stand quality should be noted.

3) Yield

a) Complete yield checks for hay crops just before the second cutting is done.

b) Cut vegetation from sample plot (1/10,000 of an acre) two to three inches above the ground. Test the moisture level and weigh the sample, adjust the weights using the example below. Average the results from on the right-of-way, do the same for the off right-of-way samples.

Ideal moisture level = 18%
Sample weight = .6 lbs.
Moisture level of sample = 25%

25% - 18% = 7%
.6 lbs. x .07 = .042 lbs.
.6 lbs. - .042 lbs. = .56 lbs.
.56 lbs x 10,000 = 5,600 lbs./ac = 2.8 tons/ac.

**Attachment 4**

**New York State Farmlands – Seeding, Fertilizing, and Lime Recommendations for Gas Pipeline Right-of-Way Restoration in Farmlands**

# NEW YORK STATE FARMLANDS

# SEEDING, FERTILIZING, AND LIME RECOMMENDATIONS FOR GAS PIPELINE RIGHT-OF-WAY RESTORATION IN FARMLANDS

Rev. 6-15-2005

Provided by:

NYS Dept. of Agriculture and Markets
Division of Agricultural Protection and Development Services
10-B Airline Drive
Albany NY 12235-0001

## NEW YORK STATE FARMLANDS

## SEEDING, FERTILIZER, AND LIME RECOMMENDATIONS FOR GAS PIPELINE RIGHT-OF-WAY RESTORATION IN FARMLANDS

*This paper supplements the Department of Agriculture and Markets' publication, "Pipeline Right-of-Way Construction Projects: Agricultural Mitigation Through Stages of Project Planning, Construction/ Restoration and Follow-Up Monitoring (Rev. 11-97)." It is intended to familiarize the reader with varieties of seed mixes that are proven highly effective, in New York State farmlands affected by pipeline right-of-way construction, with full agricultural mitigation.*

*The paper lists several different seed mixes, for permanent cover, and provides other pertinent information including: temporary cover; the need for and use of soil nutrients; as well as follow-up monitoring and other useful notes. This paper is NOT intended as a guide to the sequential steps of disking and surface tillage for seedbed preparation and the sequence of liming, fertilizing, seeding, and mulching.*

*** **ALL SEEDING RATES BELOW ARE FOR DRILL SEEDER APPLICATION [*PREFERRED METHOD*].**

*** **IF BROADCAST SEEDING IS USED, ALL SEEDING RATES [*BELOW*] MUST BE DOUBLED.**

### A. Permanent Seeding Mixtures.

1.) Common for hayland planting:

a.) Alfalfa 20# if seeded alone, or with one of the following cold season grasses: Timothy, or Orchard grass, or Bromegrass should be added if one of these grasses is desired by the farm operator, at the rate of 8# per acre. [*See "3) Quick Erosion Control" below.*]

b.) Pardee Birdsfoot Trefoil 16# per acre, plus either:
Timothy, or Orchard grass, or Bromegrass should be added [per farm operator's choice] at 6# per acre rate. [*See "3) Quick Erosion Control" below.*]

c.) Medium Red Clover or Mammoth Red Clover 15# per acre, plus either: Timothy, or Orchard grass, or Bromegrass should be added [per farm operator's choice] at the rate of 6# per acre. [*See "3) Quick Erosion Control" below.*]

2.) Common for pasture planting:

a.) Dutch White Clover 6# per acre; plus
Pardee Birdsfoot Trefoil 6# per acre; plus
Orchard grass 6# per acre

b.) Note: Reed Canary Grass at the rate of 18# per acre is excellent hay or pasture grass for wetter soils. For hay, cut early. Do not use Reed Canary Grass in wetlands.

[*See "3) Quick Erosion Control" below.*]

3.) *Quick Erosion Control:*

For quick control of erosion when seeding the right-of-way: mix Annual Ryegrass as an additive into each of the Permanent Seeding Mixtures [see above]. Annual Ryegrass provides the quickest temporary cover against erosion [while the other plants are still in their slower/longer period of development]. Use approximately 6# or 7# per acre of the Annual Ryegrass when drill seeding the mix. Double the amount to 12# to 14# of Annual Ryegrass if broadcast.

THE DRILL SEEDING RATES [LISTED ABOVE] FOR DISTURBED PIPELINE RIGHT-OF-WAY ARE SLIGHTLY INCREASED OVER THE STANDARD RATES IN ORDER TO HELP COMPENSATE FOR THE LOWER THAN NORMAL GERMINATION RATES DUE TO:

- THE LOWERING OF NUTRIENTS AVAILABLE TO THE PLANTS AFTER PIPELINE CONSTRUCTION HAS DISTURBED TOPSOIL AND SUBSOIL.
- TIMING OF SEED MIX APPLICATION MAY BE IDEAL FOR SOME OF THE VARIETIES IN A MIX BUT ONLY MARGINAL FOR ONE OR MORE OTHERS.

Special situation seeding, at project's risk for pastureland only:
If the right-of-way's soil is restored by late September, a "risk" seeding can be applied between late September and the third week in October: Aroostook Winter Rye at 2 bu. or 112# per acre, mixed with: Pardee Birdsfoot Trefoil 16# per acre, Tall Fescue 20# per acre and Orchard Grass 8# per acre.
The Aroostook Rye provides winter cover, and portions of the high rate of Trefoil, Fescue, and Orchard Grass seed may stay dormant until the following spring season. If successful in coverage, the permanent seeding of respective pastures is complete. If not, the site must be reseeded.

**B. Temporary Cover.**

1.) For large-size pipeline right-of-way projects with a two-year plan, to construct one year and restore the following year.

a.) Topsoil berm
Topsoil stripping and stockpiling performed in late spring to mid summer – broadcast seed the entire topsoil berm with either Oats at 2 bu. [80#] per acre, or Aroostook Winter Rye at 2 bu. [112#] per acre in July-August. A light to moderate rate [about 1500 – 2000 #/acre] of weed-free straw mulch cover may be needed for retaining adequate summer soil moisture. [*For larger size topsoil berms, the temporary cover seeding may be more uniformly applied by "flattening" the top of the berm and using small, light equipment to drop and broadcast seed from the top, covering all surfaces of the berm.*]

b.) Exposed construction zone/subsoil
After backfilling, by or before late October, plant the exposed right-of-way subsoil to Aroostook Winter Rye at the rate of 3 bu. [168#] per acre with broadcast seeder; or 2 bu. [112#] if drill seeded. In preparation, the surface of the exposed subsoil is first scarified generally parallel with the slope's contours and fertilized with 200# of 10-20-20 (N,P,K) per acre, for temporary winter cover to succeed, due to the subsoil compaction and its low fertility. Apply a light to moderate [not heavy] rate [about 1000 #/acre] of weed-free straw mulch over the temporary seeding.

*Note that other temporary cover seedings, in addition to those noted above, may be used, pending on seasonal conditions and the mutual approval of the farmland operator and agricultural inspector.*

2.) For any pipeline right-of-way project, large or small where a "winterized" right-of-way is necessary and a seeding with Aroostook Winter Rye can be applied before the end of October:
Topsoil berm and exposed, backfilled construction zone
Apply 3 bu. [168#] per acre, broadcast. Refer to Exposed construction zone above regarding scarification of surface and rate of straw mulch.

3.) For unavoidable, off-season construction ["mud and freeze-thaw" season construction], when topsoil is stripped after October, and effective, temporary cover seeding is impossible due to inherent climate factors: use a moderate rate of weed-free straw mulch cover over the topsoil berm. Establish and maintain all temporary erosion controls along the construction right-of-way corridor – throughout the off season construction – including but not limited to: outside perimeter runoff ditching; silt fencing; water bars and runoff drainage gaps through the topsoil berm and across right-of-way to prevent water ponding, berm saturation, and erosion.

## C. Use Seed Inocculant.

1.) Remember to apply the appropriate variety of fresh inocculant to all legume seed before use [e.g.: alfalfa, birdsfoot trefoil, etc.]. *Even if the*

*seed label says it is pre-inocculated, the viable seed in the batch could easily be two or more years old while the pre-inocculant is past its life.* The certified seed itself may still be good, but non-responsive without the proper fresh inocculant applied at the time of seeding.

## D. Fertilizer For Right-of-Way Reseeding:

Soil Testing. The fertilizer rates listed below are approximations. Prior to construction, before the topsoil is stripped, representative sampling is conducted: agronomic soil samples are obtained about 400 feet apart along the right-of-way, and submitted and laboratory tested for: pH; % organic material; cation exchange capacity, and N,P,K [Nitrogen, Phosphorus/*Phosphate*, and Potassium/*Potash*). The results are applied to determine the lime and fertilizer rate to apply for the respective soils and farms.

1.) "10-20-20" This means 10# of nitrogen, 20# of phosphorus, 20# of potash per 100# of fertilizer. Pending on test results, use 300# per acre. [This totals out to 30# of nitrogen, 60# of phosphorous, 60# of potash per acre.]

2.) "5-10-10" This means 5# of nitrogen, 10# of phosphorus, 10# of potash per 100# of fertilizer. Pending on test results, use 600# per acre. [This totals out to 30# of nitrogen, 60# of phosphorous, 60# of potash per acre.]

## E. Fertilizer for temporary cover seeding of exposed right-of-way construction work surface.

Refer to "Temporary Cover" B. 1. b. Exposed construction zone/subsoil on page 2.

(*Fertilizer is not recommended for temporary seed cover on the topsoil berm, but is strongly advised on the exposed subsoil surface.*)

## F. Fertilizer as a topdressing [follow-up additive] in haylands and pastures:

"16-8-8" This means 16# of nitrogen, 8# of phosphorous, 8# of potash per 100# of fertilizer. Use 200-300# per acre, depending on field conditions. This totals out to either:
32# of nitrogen, 16# of phosphorus, 16# of potash; or
48# of nitrogen, 24# of phosphorus, 24# of potash per acre.

## G. Agricultural Lime.

See reference to Soil testing, for pH, in **D. Fertilizing For Right-of-Way Reseeding**, above.

- A minimum rate of 3 tons agricultural lime per acre for most permanent seedings in naturally low-lime soils [e.g.: Southern Tier/northern Allegheny Plateau]. A heavier amount will be applied if so indicated from pH test results. Use lower lime rate on naturally high-lime soils based on site specific soil pH test and farm record of recent lime application [e.g.: Central Plains/northern half of Finger Lakes Region].

- Pelletized and agriculture lime are rated the same in tons to be applied. Except pelletized is easier to handle and reacts to the soil quicker but it cannot be reduced in its amount. [Do not use "liquid lime" on agricultural land.]

## H. Monitoring and Follow-Up.

- Restored right-of-way is monitored for not less than two years after initial restoration seeding is completed. The seeding is satisfactory if it produces equal to or better than the adjacent undisturbed planting.
  Seasonal surface soil moisture conditions will vary from year to year, and may be ideal to poor [excessively dry] for germination when pipeline project applies the seed. Seedings that are unsatisfactory due to lower plant population/poor plant health or overpopulation of weeds will be replanted.

  *For monitoring of crop productivity, refer to: "Special Crop Productivity Monitoring Procedures," a February 1993 paper, provided by the NYS Department of Agriculture and Markets.*

## I. Final Notes on Seedings.

- Always use certified seed for each variety used alone or in a mix.

- Always use a Brillon® drill seeder with rear cultipacker, or similar implement, for hayland and improved pasture seedings.

- Do not try to seed when the ground is wet.

- While Empire birdsfoot trefoil has been a traditional variety applied throughout the region, the more recently developed "Pardee" birdsfoot trefoil is widely applied with proven performance in soils with drainage limitations and even better in well-drained soils. The Pardee variety has improved winter survival over other varieties when properly planted.

- Remember to double the permanent seeding rates when using broadcast seeding due to the mortality rate.
- Perennial Ryegrass is not a favorite grass with farmers and is not recommended in seed mixes on agricultural right-of-way.
- Incorporate fertilizer and lime into the soil; and apply fine surface tillage/seedbed preparation practices
- Creeping Fescue is shade tolerant.

Unofficial FERC-Generated PDF of 20060517-0284 Received by FERC OSEC 05/16/2006 in Docket#: CP06-5-000


# Attachment Q-4B

Responsive to Question No. 4

*Redline Version of ESCAMP*

Unofficial FERC-Generated PDF of 20060517-0284 Received by FERC OSEC 05/16/2006 in Docket#: CP06-5-000


# EMPIRE CONNECTOR PROJECT

## Erosion and Sediment Control & Agricultural Mitigation Plan

Unofficial FERC-Generated PDF of 20060517-0284 Received by FERC OSEC 05/16/2006 in Docket#: CP06-5-000


TABLE OF CONTENTS

| | | Page |
|---|---|---|
| 1 | INTRODUCTION | 1 |
| 1.1 | Plan Objectives | 1 |
| 1.2 | Format | 1 |
| 2 | SUPERVISION AND INSPECTION | 2 |
| 2.1 | Environmental Inspection | 2 |
| 2.2 | Responsibilities of Environmental Inspectors | 2 |
| 2.3 | Agricultural Inspection | 3 |
| 2.4 | Responsibilities/Qualifications of Agriculture Inspectors | 4 |
| 3. | PRECONSTRUCTION PLANNING | 7 |
| 3.1 | Construction Work Areas | 7 |
| 3.1.1 | ROW & Staging Areas | 7 |
| 3.1.2 | Access Roads | 7 |
| 3.1.3 | Pipe yards | 7 |
| 3.1.4 | Wetland/.Waterbody Crossings | 8 |
| 3.2 | Agricultural Area Planning | 8 |
| 3.2.1 | Drain Tile and Irrigation Systems | 8 |
| 3.2.2 | Grazing Deferment | 8 |
| 3.3 | Disposal Planning | 8 |
| 3.4 | Agency Coordination | 9 |
| 3.5 | Stormwater Pollution Prevention Plan | 9 |
| 4 | CONSTRUCTION ACTIVITIES | 10 |
| 4.1 | Approved Areas of Disturbance | 10 |
| 4.2 | Residential Area Construction | 10 |
| 4.3 | Agricultural Area Construction | 11 |
| 4.3.1 | Topsoil Segregation | 11 |
| 4.3.2 | Drain Tiles | 12 |
| 4.3.3 | Irrigation | 12 |
| 4.4 | Equipment Crossings | 12 |
| 4.5 | Road Crossings and Access Points | 13 |
| 4.6 | Interim Stabilization | 13 |
| 4.7 | Temporary Slope Breakers | 14 |
| 4.8 | Sediment Barriers | 14 |
| 4.9 | Mulch | 15 |
| 4.10 | Trench Dewatering | 15 |
| 4.11 | Trench Breakers | 17 |
| 4.12 | Maintenance of Erosion Control Devices | 17 |
| 5 | WATERBODY CROSSINGS | 18 |
| 5.1 | Construction Restrictions | 18 |
| 5.2 | Stream Buffer Area | 18 |

Unofficial FERC-Generated PDF of 20060517-0284 Received by FERC OSEC 05/16/2006 in Docket#: CP06-5-000


5.3 Maintenance of Stream Crossing Control Devices 18
5.4 Additional Work Space Areas 18
5.5 Spoil Pile Placement/Control 19
5.6 Waterbody Crossing Procedures 19
5.7 Pipeline Construction at Streams 19

6 WETLAND CROSSINGS 20

6.1 General Guidelines 20
6.1.1 Construction in Dry Wetlands 20
6.1.2 Construction in Saturated Wetlands 20
6.2 Standard Pipeline Construction 21
6.3 Equipment Pads 22
6.4 Clearing 22
6.5 Grading 22
6.6 Trenching 22
6.7 Lowering-in/Backfilling 23

7 RESTORATION 24

7.1 Cleanup 24
7.2 Permanent Slope Breakers 24
7.3 Permanent Restoration Measures 25
7.4 Wetland and Waterbody Crossing Restoration 25
7.4.1 Wetlands Crossings 25
7.4.2 Waterbody Crossings 26
7.5 Residential Areas Restoration 26
7.6 Agricultural Mitigation 26
7.6.1 Subsurface Drainage Systems 27

8 REVEGETATION 29

8.1 General 29
8.2 Revegetation Operations 29
8.3 Soil Additives 29
8.4 Seeding Requirements 29
8.5 Temporary Mixtures - October 1 through March 31 30
8.6 Permanent Mixtures - April 1 through September 30 30

9 POST CONSTRUCTION ACTIVITIES 31

9.1 Monitoring and Maintenance 31
9.2 Reporting 31
9.3 Off Road Vehicle Control 32

10 GENERAL PIPELINE CONSTRUCTION SEQUENCING 33

10.1 Pre-Construction 33
10.2 Staging Area 33
10.3 Handling of Hazardous Materials 33
10.4 Access Roads 34
10.5 Clearing 34

Unofficial FERC-Generated PDF of 20060517-0284 Received by FERC OSEC 05/16/2006 in Docket#: CP06-5-000


10.6 Grading 34
10.7 Rock Entrances 34
10.8 Temporary Diversions 35
10.9 Ditching 35
10.10 Lowering In 35
10.11 Backfilling 36
10.12 Hydrostatic Testing 36
10.13 Restoration and Revegetation 37

11 REFERENCES 38

Attachment 1 - Soil Protection and Subsoil Decompaction Plan
Attachment 2 - Best Management Practices Drawings
Attachment 3 - Special Crop Productivity Monitoring Procedures
Attachment 4 - New York State Farmlands - Seeding, Fertilizing, and Lime Recommendations for Gas Pipeline Right-of-Way Restoration in Farmlands

Unofficial FERC-Generated PDF of 20060517-0284 Received by FERC OSEC 05/16/2006 in Docket#: CP06-5-000


# 1 INTRODUCTION

## 1.1 Plan Objectives

The primary objective of this Erosion and Sedimentation Control & Agricultural Mitigation Plan (ESCAMP or "Plan") is to reduce potential impacts from construction and maintenance of the project and outline mitigation, monitoring and maintenance procedures.

This Plan describes basic environmental construction and agricultural mitigation techniques that Empire (or its contractors) will use to construct and maintain pipelines. Best Management Practices (BMPs) will be implemented throughout construction to protect the environment and to minimize potential effects to the pipeline project.

Empire may modify the ESCAMP prior to construction, to include any additional requirements recommended by Federal, State, or Local agencies during the process of issuing permits. This document will be included as part of the Contractor's construction specifications.

## 1.2 Format

The content of this Plan is derived from the Federal Energy Regulatory Commission's (FERC) Wetland and Waterbody Construction and Mitigation Procedure; Upland Erosion Control, Revegetation, and Maintenance Plan; and New York State Department of Agricultural and Markets Pipeline Construction Projects - Agricultural Mitigation Through the Stages of Pipeline Planning, Construction/Restoration and Follow Up Monitoring (Rev 11/97). Additional project specific input has been integrated from consultation with the New York State Department of Environmental Conservation, New York State Department of Agriculture and Markets, New York Farm Bureau, United States Fish & Wildlife Service, the United States Department of Agriculture, and County Soil & Water Conservation Districts.

Deleted: Right-of-Way

Deleted: Plan

This ESCAMP provides information regarding the project construction and restoration, including the following:

- Agricultural Mitigation, as described herein and provided in the attached Soil Protection and Subsoil Decompaction Plan (Attachment 1);
- Wetland/Waterbody Construction, Erosion and Sedimentation Controls as described herein and as detailed in attached Best Management Practices (BMP) drawings (Attachment 2);
- Stormwater Pollution Prevention project information; and
- Revegetation and Maintenance details.
- Reference information used to develop this Plan is identified in the Section 11. Supplemental information is provided in the project Spill Prevention, Control and Countermeasures (SPCC) document, Hydrostatic Test Plan, and Site Specific Residential Mitigation Plans (not included in this document).

Unofficial FERC-Generated PDF of 20060517-0284 Received by FERC OSEC 05/16/2006 in Docket#: CP06-5-000


## 2 SUPERVISION AND INSPECTION

### 2.1 Environmental Inspection

- At least one Environmental Inspector is required for each construction spread during construction or restoration. The number and experience of Environmental Inspectors assigned to each construction spread should be appropriate for the length of the construction spread and the number/significance of resources affected.
- Environmental Inspectors shall have peer status with all other activity inspectors.
- Environmental Inspectors shall have the authority to stop activities that violate the environmental conditions of the Certificate, State and Federal environmental conditions, or landowner requirements; and to order appropriate corrective action. Corrective actions (and their status) will be documented in daily forms and, at a minimum, maintained in project files for the duration of construction activities.

The Project's Environmental Manager will be the primary liaison between the Project and agency representatives. Environmental Inspectors may be directed by the Environmental Manager to coordinate with agency field staff during project inspection activities. Agencies will be notified of project activities in accordance with permit and certificate requirements or as required by law (e.g., spill of hazardous material to a water source). Additional notifications will be made on a case-by-case situation (e.g., requests for agency guidance or existing requirement variances).

### 2.2 Responsibilities of Environmental Inspectors

At a minimum, the Environmental Inspector(s) shall be responsible for:

- Ensuring compliance with the requirements of this Plan, FERC Procedures, the environmental conditions of the Certificate authorization, the mitigation measures proposed by the applicant (as approved and/or modified by the Certificate), other environmental permits and approvals, and environmental requirements in landowner easement agreements.
- Identifying, documenting, and overseeing corrective actions, as necessary to bring an activity back into compliance.
- Verifying that the limits of authorized construction work areas and locations of access roads are properly marked before clearing.
- Verifying the location of signs and highly visible flagging marking the boundaries of sensitive resource areas, waterbodies, wetlands, or areas with special requirements along the construction work area.
- Identifying erosion/sediment control and soil stabilization needs in all areas.
- Coordinate activities with agricultural inspectors and drainage specialists in farm land areas (see Section 2.4 – Responsibilities/Qualifications of Agriculture Inspectors).
- Ensuring that the location of dewatering structures and slope breakers will not direct water into known cultural resources sites or locations of sensitive species.

Unofficial FERC-Generated PDF of 20060517-0284 Received by FERC OSEC 05/16/2006 in Docket#: CP06-5-000


- Verifying that trench-dewatering activities do not result in the deposition of sand, silt, and/or sediment near the point of discharge into a wetland or waterbody. If such deposition is occurring, the dewatering activity shall be stopped and the design of the discharge shall be changed to prevent reoccurrence (See Trench Dewatering section of this Plan).
- Ensuring that subsoil and topsoil are tested in residential areas to measure compaction and determine the need for corrective action.
- Advising the Chief Inspector when conditions (such as wet weather) make it advisable to restrict construction activities to avoid excessive rutting.
- Ensuring restoration of contours and topsoil.
- Verifying that the soils imported for agricultural or residential use have been certified (if available) as free of noxious weeds and soil pests, unless otherwise approved by the landowner.
- Determining the need for and ensuring that erosion controls are properly installed, as necessary to prevent sediment flow into wetlands, waterbodies, sensitive areas, and onto roads.
- Ensuring compliance with New York State DEC State Pollution Discharge Elimination System (SPDES) General Permit for Stormwater Discharges from construction activities (See Stormwater Pollution Prevention section of this Plan).
- Inspecting and ensuring the maintenance of temporary erosion control measures at least:
    - On a daily basis in areas of active construction or equipment operation.
    - On a weekly basis in areas with no construction or equipment operation.
    - Within 24 hours of 0.5 inch of rainfall.
- Ensuring the repair of all ineffective temporary erosion control measures within 24 hours of identification.
- Keeping records of compliance with the environmental conditions of the FERC certificate, and the mitigation measures proposed by the project sponsor in the application submitted to the FERC, and other Federal or state environmental permits during active construction and restoration.
- Identifying areas that should be given special attention to ensure stabilization and restoration after the construction phase.

## 2.3 Agricultural Inspection

The Agricultural Inspection for the project will include a combination of agricultural and drainage specialists to ensure aspects of the project that affect farmland, meet or exceed: the basic standards of the NYS Department of Agriculture and Markets and project-specific conditions or orders of certification, relevant to agricultural resources, which are incorporated by the lead/certifying agency.

The Empire Pipeline Project's level of agriculture-related staffing will be dependent on the workload requirements including but not limited to: technical, pre-construction planning; construction/restoration inspection and; monitoring and follow-up remediation including drainage mitigation activities (e.g.: less staff during the pre-construction planning phase and the monitoring and the follow-up remediation phase), but will include the project's commitment to not less than four agricultural inspectors and two agricultural drainage specialists on a full-time basis through pipeline construction/restoration, which make up the peak work load phase of pipeline right-of-way activity.

Deleted: peak

Unofficial FERC-Generated PDF of 20060517-0284 Received by FERC OSEC 05/16/2006 in Docket#: CP06-5-000


Based on the project's anticipated division into two construction work spreads, there will be one agricultural drainage specialist and two agricultural inspectors assigned full-time, per spread. However, a practical degree of flexibility will be available: should agricultural construction/restoration activity within one work spread be temporarily light enough for one agricultural inspector to fully and effectively supervise, at a time when the activities are heavy in the other work spread, then one (of the two) agricultural inspectors in the former spread may temporarily assist the staff in the latter spread. For periods of peak construction/restoration activities in agricultural lands which exceed the effective capability of the full-time staff which the project is committed to (see above), the project will provide additional temporary agricultural inspectors.

During phases of less intensive project activity (e.g., pre-construction planning, or dormant right-of-way winterization without construction, follow-up crop monitoring, etc.), fewer staff may be employed, as appropriate, relative to the level of activity. Regardless, the project sponsor will provide an adequate number of qualified personnel (per the responsibilities/qualifications herein) to meet the level of effort required by this plan or FERC Certificated conditions.

To the extent practicably feasible, the project will strive to utilize the same agricultural and drainage specialist staff during the planning, construction restoration and monitoring phases of work to allow for maximum technical continuity.

## 2.4 Responsibilities/Qualifications of Agriculture Inspectors

Agricultural Inspector

The work of a qualified Agricultural Inspector, with the ability and the authority required to perform independently, assumes the pipeline right-of-way project aspects listed below:

- Training and education of other project sponsor staff (e.g.: land agents, craft inspectors, assistant agricultural compliance inspectors, environmental inspectors, etc.), and construction personnel, in the proper use and application of the agricultural right-of-way standards and case-specific orders of certification.
- Technical field supervision over all aspects of the project that affect agricultural resources, through each stage of on-site work: right-of-way clearing, construction stages (including compliance with trench dewatering procedures), clean-up stage and initial restoration stages.
- *Technical field supervision (after the satisfactory completion of initial restoration), over the on-site* monitoring of, and the follow-up restoration in, agricultural lands.
- Communication in conjunction with other project staff with affected farmland owners and operators over the project's duration: planning through construction/initial restoration, to completion of monitoring and follow-up restoration.

The key mission of each Agricultural Inspector is ensuring the project's full compliance in meeting (or exceeding) standards and case-specific conditions or orders pertaining to the affected agricultural resources.

The following are recommended qualifications for Agricultural Inspectors:

Unofficial FERC-Generated PDF of 20060517-0284 Received by FERC OSEC 05/16/2006 in Docket#: CP06-5-000


- Earned a bachelor degree or associate in applied science diploma in: agronomy or environmental sciences, with concentration in: agriculture, soils, horticulture, forestry, or closely allied science, and been employed in the respective field, regionally, not less than five years (i.e.: not fresh out of college); or-
- *Advanced steadily in a career through on-the-job training and performance, regionally, for a minimum of* ten years as a soil and water conservation field technician with a practical working knowledge of soil conservation, farming, surveying, land excavation and drainage, or similar types of work: from the land review, field planning and design/layout phase through construction inspection and site completion; or-
- Advanced steadily in a career through on-the-job training and field performance for a minimum of five years in pipeline construction/restoration right-of-way work, with at least two full years serving as an assistant to either a qualified agricultural or environmental compliance inspector, and have earned, and currently hold certification as, either a Professional in Erosion and Sediment Control (CPESC) or Professional in Storm Water Quality (CPSWQ); or-
- Combination of the above qualifications.

Drainage Specialist

*The Agricultural Drainage Specialist is responsible for the detailed, on-site data consolidation of all surface* and subsurface drainage characteristics and facilities for affected farmlands; and planning and technically supervising all drainage-related mitigation, through the planning and construction, initial restoration, post-construction monitoring and follow up restoration stages. The drainage specialist provides the specialized technical direction that enables the project to fully restore all disturbed land and all facility components of surface and subsurface drainage on affected farmland; including the effective mitigation of new or exacerbated conditions of water boils or field saturation

The drainage specialist serves as a specialized arm of the Agricultural Inspectors working in close technical coordination with them over a project's full duration, as required. The drainage specialist will provide primary technical direction of on-site drainage mitigation and follow up for all affected agricultural lands. In addition the drainage specialist may provide both technical field direction and oversight of the subcontractors specializing in agricultural drainage.

The work of a qualified drainage specialist, with the ability and technical authority to work both jointly and independently, assumes the pipeline right-of-way project aspects listed below:

- On-site inventory of all surface and subsurface drainage-related characteristics of affected farmlands, in the pre-construction planning phase. This includes location referencing for drainage such as:
  - existing features of surface runoff such as small but defined swales, up to large and broad swales;
  - existing farm features of water control such as diversion terraces, field ditches, main outlet ditches;
  - subsurface drain line systems ranging from clay tile to modern perforated polyethylene tubing; or, approximated locations of earlier stone drain systems;
  - key drainage features which are outside of the directly affected farm field[s], but may serve to receive the respective surface or subsurface drainage, e.g.: ditches and culverts of active or abandoned railroads, road ditches, etc.
- Estimating portions of farms, based on soil, terrain, and drainage/water table characteristics, where new or exacerbated conditions of water boils or field saturation should be anticipated for follow up mitigation.
- In farm lands, assisting other Agricultural and Environmental Inspectors in the advance selection of acceptable trench de- watering measures and respective locations of water discharge to avoid agricultural

Unofficial FERC-Generated PDF of 20060517-0284 Received by FERC OSEC 05/16/2006 in Docket#: CP06-5-000


impacts and estimating the pumping/associated hose length requirements necessary to ensure such avoidance of impacts.

- Ensuring the project's prompt marking/staking of *all* disturbed drainage facilities. Assisting the Agricultural Inspectors, as needed, in ensuring compliance with trench de-watering standards and dry backfilling (as defined in Section 4.10) of the trenches in affected farmland.
- Planning and laying out interceptor drain line systems including their safe, gravity-flow discharge to predetermined outlet locations.
- Providing on-site design, general material estimates and technical field supervision over:

  - drain line repairs and system replacements;
  - the effective engineering re-construction of un-avoided surface drainage facilities such as diversion terraces or farm waterways;
  - the installation and outlet of interceptor drain line systems.

Unofficial FERC-Generated PDF of 20060517-0284 Received by FERC OSEC 05/16/2006 in Docket#: CP06-5-000


## 3. PRECONSTRUCTION PLANNING

This Section presents the pre-construction planning efforts, further details regarding the construction activities are presented in Section 4 - Construction Activities and general sequencing of planning, *installation, cleanup and restoration is presented in Section 10 - General Pipeline Construction* Sequencing.

### 3.1 Construction Work Areas

Construction activities shall be confined to the approved work areas.

Identify all construction work areas (e.g., construction right-of-way, extra work space areas, pipe storage and contractor yards, access roads, etc.) that would be needed for safe construction. The project sponsor must ensure that appropriate cultural resources and biological surveys have been conducted.

#### 3.1.1 ROW & Staging Areas

Before construction begins, the right-of-way (ROW) will be surveyed and staked. Other utility lines will be located and marked to prevent accidental damage during pipeline construction.

Staging areas will be set up when the contractor starts work. Proper BMP controls will be erected prior to any sustained heavy traffic. If vehicles enter or exit the staging area onto a paved road, an entrance pad will be installed as per *BMP Drawing No. 1.*

#### 3.1.2 Access Roads

The project will make use of the ROW for access along the pipeline. Where additional access is necessary for pick up trucks and other vehicles, existing access roads may be used upon agreement with the landowner. Appropriate BMP controls will be installed and maintained on these roads, and they will be reclaimed to a condition at least equal to their pre-construction condition.

In agricultural lands topsoil will be stripped and segregated for expansion (widening or lengthening) or installation access roads (if necessary). Empire will work with landowners, and if requested by the landowner, access roads will remain in place for landowner use following construction. Alternatively, if access roads are restored to original use (e.g., tillable land) they will be fully restored using the same scope of agricultural mitigation and restoration measures that apply to pipeline construction right-of-way.

#### 3.1.3 Pipe yards

During project planning efforts have been made to site pipeyards in previously disturbed non-agricultural areas. Currently no yards are proposed in agricultural lands; however, if agricultural lands are utilized for yards, the Contractor shall strip and segregate topsoil in agricultural lands used as pipe yards. However, if any such area is used as a pipeyard it will be fully restored using the same scope of agricultural mitigation and restoration measures that apply to pipeline construction right-of-way.

Unofficial FERC-Generated PDF of 20060517-0284 Received by FERC OSEC 05/16/2006 in Docket#: CP06-5-000


### 3.1.4 Wetland/Waterbody Crossings

The pre-construction activities include survey of topographic surface elevations, in addition to the identification of wetlands and waterbodies. This survey will include elevations at the banks and center point of the crossing for both pre- and post-construction. This topographic survey of conditions will be used, in conjunction with pre-construction photograph of the crossing locations from several angles to document the pre-existing conditions of the crossing and to confirm that existing topography and profiles are re-established during restoration. All construction plans will be prepared in accordance with the FERC guidance, Empire standards and the Best Management Practices referenced otherwise in the Resource Report submittal.

Stream crossings will be inspected daily during active construction and weekly during inactive construction. Following the restoration of the stream crossing, the crossings will be inspected after major rain events. This inspection program will continue through several high water events to ensure that the stream channel is stable. After the project is complete, the entire pipeline route will be inspected twice annually as part of the normal maintenance and inspection program detailed in Resource Report 11.

## 3.2 Agricultural Area Planning

### 3.2.1 *Drain Tile and Irrigation Systems*

Supplementing the details of pre-construction activities, in agricultural areas, as identified in the responsibilities of the Drainage Specialist (Section 2.4), planning will include the following:

Deleted: P

Deleted: planning

- Attempt to locate existing drain tiles and irrigation systems.
- Contact landowners and County Soil and Water Conservation Districts to determine the locations of future drain tiles that are likely to be installed within 3 years of the authorized construction.
- When working in New York State, develop procedures (with NYS DA&M) for constructing through drain tile areas, maintaining irrigation systems during construction, and repairing drain tiles and irrigation systems after construction.
- Assist in identification of the dewatering outlets and favorable locations, including off ROW, for the protected daylighting of gravity flow drain outlets for new interceptors or replaced drain lines.
- For new pipelines in areas where drain tiles exist or are planned, ensure that the depth of cover over the pipeline is sufficient to avoid interference with drain tile systems.

### 3.2.2 Grazing Deferment

Develop grazing deferment plans with willing landowners, grazing permittees, and land management agencies to minimize grazing disturbance of revegetation efforts.

## 3.3 Disposal Planning

Unofficial FERC-Generated PDF of 20060517-0284 Received by FERC OSEC 05/16/2006 in Docket#: CP06-5-000


Determine methods and locations for the disposal of construction debris (e.g., timber, slash, mats, garbage, drilling fluids, excess rock, etc.). Off-site disposal in other than commercially operated disposal locations is subject to compliance with all applicable survey, landowner permission, and mitigation requirements. These materials will not be disposed on or buried in agricultural lands.

### 3.4 Agency Coordination

During the planning the project sponsor must coordinate with the appropriate local, state, and Federal agencies as outlined in this Plan and in the FERC Certificate, and for agricultural lands shall:

- Obtain recommendations from the County Soil and Water Conservation Districts or land management agencies regarding the identification of "highly erosive soils", permanent erosion control and revegetation specifications.
- Empire will consult with the appropriate technical and/or regulatory agencies (Cornell Cooperative Extension Regional Vegetable Program Specialist; at the Penn Yan, Yates County office and NYSDA&M Division of Plant Industry Albany, NY; and USDA - Animal and Plant Health Inspection Services (APHIS), Kanona (Steuben County) regarding noxious weeds and soil-borne pathogens. Empire agrees to consult with the appropriate agencies regarding agricultural biosecurity (noxious weeds and soil-borne pathogens). If necessary, based on this consultation, Empire will develop specific practical cost effective procedures to mitigate significant agricultural biosecurity risks, if they are determined to exist in the project area.

Deleted: D

Deleted: evelop specific procedures in coordination

Deleted: y

Deleted: to prevent the introduction or spread of agricultural diseases resulting from construction and restoration activities.

### 3.5 Stormwater Pollution Prevention Plan

Make available on each construction spread the Stormwater Pollution Prevention Plan prepared for compliance with the New York State DEC State Pollution Discharge Elimination System (SPDES) General Permit for Stormwater Discharges from Construction Activities.

Unofficial FERC-Generated PDF of 20060517-0284 Received by FERC OSEC 05/16/2006 in Docket#: CP06-5-000


# 4 CONSTRUCTION ACTIVITIES

This Section presents the details regarding specific construction activities while additional general sequencing of planning, installation, cleanup and restoration are presented in Section 10 - General Pipeline Construction Sequencing.

## 4.1 Approved Areas of Disturbance

Project-related ground disturbance shall be limited to the construction right-of-way, extra workspace areas, pipe storage yards, borrow and disposal areas, access roads, and other areas approved in the Certificate. Any project-related ground disturbing activities outside these Certificated areas, except those needed to comply with the Plan and Procedures (e.g., slope breakers, energy-dissipating devices, dewatering structures, drain tile system repairs) will require prior Director approval. All construction or restoration activities outside of the Certificated areas are subject to all applicable survey and mitigation requirements.

The construction right-of-way width for a project shall not exceed 75 feet or that described in the FERC application unless otherwise modified by a Certificate condition. However, in limited, non-wetland areas, this construction right-of-way width may be expanded by up to 50 feet of CROW and additional temporary work space without Director approval to accommodate full construction right-of-way topsoil segregation, bedrock spoil storage, and to ensure safe construction where topographic conditions (such as side-slopes) or soil limitations require it.

Project use of any additional areas is subject to landowner approval and compliance with all applicable survey and mitigation requirements. When such additional areas are used, each one should be identified and the need explained in the weekly or biweekly construction reports to the FERC, if required. The following material should be included in the reports:

- The location of each additional area by station number and reference to a previously filed alignment sheet, or updated alignment sheets showing the additional areas;
- Identification of where the Commission's records contain evidence that the additional areas were previously surveyed; and
- A statement that landowner approval has been obtained and is available in project files.

## 4.2 Residential Area Construction

The care exercised by construction crews and the qualities of cleanup following construction are paramount concerns of homeowners. Empire will make every effort to ensure that all construction activities minimize adverse impacts to residences and that cleanup is quick and thorough.

Throughout construction, traffic lanes and access to homes will be maintained except for the brief periods essential for laying the new pipeline. The Contractor will erect temporary safety fences in the vicinity of streets and homes to keep the public away from the construction zone. Empire may use techniques such as stovepipe and drag section construction in order to minimize the impacts of construction in residential

Unofficial FERC-Generated PDF of 20060517-0284 Received by FERC OSEC 05/16/2006 in Docket#: CP06-5-000


areas on a site-specific basis. Site specific residential mitigation plans will be utilized in areas with residences within 25 feet of construction right-of-way.

Homeowners will be notified in advance of any scheduled disruption of household utilities and the duration of the interruption will be kept as brief as possible. Representatives of the local utility companies will be on-site during construction when necessary. In addition, Empire will strive to accommodate any special concerns regarding ornamental shrubs, trees, or structures by avoiding them as long as such avoidance's will not unduly interfere with construction and operation of the pipeline.

Empire will take measures to ensure that construction activities will not prevent access to residential areas by fire and emergency vehicles. At least one lane of traffic will be kept open when constructing on or across residential streets. During the brief period of a few hours when a road is completely cut, steel plates will be available on site to cover the open area to permit travel by emergency vehicles.

In residential areas, topsoil replacement (i.e., importation of topsoil) is an acceptable alternative to topsoil segregation. Where topsoil segregation is conducted, maintain separation of salvaged topsoil and subsoil throughout all construction activities. Segregated topsoil may not be used for padding the pipe or filling sandbags.

Immediately after backfilling, residential areas will be cleaned up, and all construction debris will be removed. Lawns will be raked, topsoil added as necessary, and lawns restored per agreements with landowners. Ornamental shrubs will be replaced where possible. Contractors will restore fences, mailboxes, and other structures removed during construction. Sidewalks, driveways, and roads will be restored as soon as practical.

### 4.3 Agricultural Area Construction

In predominantly agricultural areas, Empire will have Agricultural Inspectors/Specialists on site during construction in accordance with the Agricultural Inspection section of this Plan. In addition, prior to construction, Empire's Drainage Specialists (in coordination with Empire land agents) will contact farm landowners and operators and the local agencies for planning purposes described in previous section.

#### 4.3.1 Topsoil Segregation

The mixing of topsoil with subsoil will be prevented by stripping and segregating topsoil from the full work area in:

- Agricultural Lands including:
  - Actively cultivated or rotated croplands or developed improved pastures; and
  - Hayfields (including long-term hayfields and Conservation Reserve Program lands);
- Residential areas; and
- Other area as required by FERC Certificated conditions.

Additionally:

Unofficial FERC-Generated PDF of 20060517-0284 Received by FERC OSEC 05/16/2006 in Docket#: CP06-5-000


- In deep agricultural soils (more than 12 inches of topsoil), stripping down to the actual depth of subsoil or 16 inches for segregation, whichever is less will be implemented. In soils with less than 12 inches of topsoil the entire topsoil layer and 1-2 inches of friable subsoil will be segregated.

Where topsoil segregation is conducted, maintain separation of salvaged topsoil and subsoil throughout all construction activities. Segregated topsoil may not be used for padding the pipe or filling sandbags.

### 4.3.2 Drain Tiles

All drainage tiles encountered shall be marked, maintained during construction, and restored to as good or better condition upon completion of construction. *BMP Drawing Nos. 30, 30A and 42* provide typical information for drain tiles where encountered. Specific details on drain tile monitoring activities are provided in Section 7.6.1.

- Encountered drain tiles shall be referenced and flagged with stakes located adjacent to the ditch, and the right-of-way edge (outer perimeters).
- When it is necessary to maintain flow in the drainage system during construction, a temporary pipe bridge shall be installed across the trench. Smaller feeder drains shall be capped so that flows are diverted to the primary drain on which the Pipe Bridge has been installed.
- Open ends of tile shall be covered to prevent ingress of dirt, rock, or wildlife.
- All drainage systems shall be probed to determine if damage has occurred. All tiles damaged during construction shall be flagged by the trenching inspector; then repaired or replaced to their original or better condition under the supervision of the Drainage Specialist. Do not use filter-covered drain tiles unless the County Soil and Water Conservation district authorities and landowner specify. Qualified Drainage specialists shall be used to ensure proper repairs and adequate probing/testing of the repaired or replaced drainage systems.
- For new pipelines in areas where drain tiles exist or are planned, ensure that the depth of cover over *the pipeline is sufficient to avoid interference with drain tile systems.*
- Other drainage-related impacts such as water boils and right-of-way saturation that are created or exacerbated by the pipeline project will be mitigated during monitoring and follow-up remediation (see Section 9.1 - Monitoring and Maintenance).
- Detailed records of drainage system repairs shall be maintained and given to the landowner and the County Soil and Water Conservation District offices for future reference upon request.

Deleted: < # > Water flow in crop irrigation systems will be maintained unless shutoff is coordinated with the affected parties.¶

### 4.3.3 Irrigation

- Water flow in crop irrigation systems will be maintained unless shutoff is coordinated with the affected parties.

Deleted: Maintain water flow in crop irrigation systems, unless shutoff is coordinated with affected parties.

Formatted: Bullets and Numbering

### 4.4 Equipment Crossings

Construction of equipment crossings will occur during the clearing or grading process. Protective measures will include the use of timber mats laid adjacent to and across streambeds if banks are high enough, flume pipe covered by fill material (clean gravel or crushed stone) or portable bridges approved by the Environmental Inspector. The size and number of flume pipes will be sufficient for maximum

Unofficial FERC-Generated PDF of 20060517-0284 Received by FERC OSEC 05/16/2006 in Docket#: CP06-5-000


anticipated flows. Typical crossing method information is presented on *BMP Drawing Nos. 2, 9, 12, 13 and 21.*

Flume pipes will conform to waterbody crossing dimensions and alignments. Stream channels will not be permanently straightened or realigned to conform with flume pipe dimensions or for any other reasons, unless a permit has been acquired to do so.

If fill for equipment crossings includes log riprap or other material that could erode into the waterbody, sandbags will be used on both sides of the crossing. Sandbags will be placed in the waterbody, at the upstream and downstream ends of the crossing, to stabilize and seal any flume pipes used. To prevent erosion, sandbags will be placed high enough along both sides of the equipment crossing to contain the fill material during construction (hay/straw bales may also be used for this purpose, if specifically authorized by Company). Spoil disposal sites will not be located in any waterbody, wetland, floodplain or other environmentally sensitive area.

4.5 Road Crossings and Access Points

An entrance pad *(BMP Drawing No. 1)* is a temporary entrance/exit located where construction traffic enters or leaves the right-of-way onto or from a roadway or other paved surface. This access pad is typically constructed of stone or gravel. Strip topsoil and segregate for access areas and roads in agricultural and residential lands.

A stabilized entrance pad is intended to reduce off-site sedimentation by eliminating the tracking of excess soil onto paved public roadways. The entrance pad serves as the designated point at which all construction traffic can access and exit the right-of-way. If crushed stone access pads are used in residential or active agricultural areas, place the stone on durable synthetic fabric to facilitate removal.

The Grading Crew will install rock entrances at public roads. If the job kicks off at a point where an entrance pad is required, the entrance pad will be installed as soon as the immediate area required for the pad is stumped and rock can be brought in. This shall be within forty-eight (48) hours from the time the Grading Crew move onto the location.

For other locations along the pipeline where entrance pads are required, the pads will be installed as the Grading Crew progresses to these locations, but no later than forty-eight (48) hours from the time they reach these locations.

4.6 Interim Stabilization

Where activity ceases for 20 or more days or jobs not cleaned up by October 15 will be final graded and seeded with Aroostook (if available) winter rye at a rate of 170 pounds per acre. One hundred percent (100%) mulch will be spread on all slopes of 10% or steeper. Only weed-free straw mulch, not hay mulch, will be used where mulch is needed on agricultural land. Before permanent seeding is planted in spring, the right-of-way will be inspected and any grade or water control structures that have been damaged over the winter will be repaired.

Unofficial FERC-Generated PDF of 20060517-0284 Received by FERC OSEC 05/16/2006 in Docket#: CP06-5-000


### 4.7 Temporary Slope Breakers

Install temporary erosion controls immediately after initial disturbance of the soil. Temporary erosion controls must be properly maintained throughout construction (on a daily basis) and reinstalled as necessary (such as after backfilling of the trench) until replaced by permanent erosion controls or restoration is compete.

- Temporary slope breakers are intended to reduce runoff velocity and divert water off the construction ROW. Temporary slope breakers may be constructed of materials such as soil, silt fence; staked hay or straw bales (straw only in agricultural lands), or sand bags.

- Install temporary slope breakers on all disturbed areas, as necessary to avoid excessive erosion. Temporary slope breakers must be installed on slopes greater than 5 percent where the base of the slope is less than 50 feet from waterbody, wetland, road crossings and the following spacing (closer spacing if necessary): (See *BMP Drawing No. 8*)

| Slope | Distance |
|---|---|
| 5 - 15% | 300 Feet |
| 15 - 30% | 200 Feet |
| > 30% | 100 Feet |

- Direct the outfall of each temporary slope breaker to a stable, well-vegetated area or construct an energy-dissipating device at the end of the slope breaker and off the construction ROW (*See BMP Drawing No. 31*).
- Position the outfall of each temporary slope breaker to prevent sediment discharge into wetlands, waterbodies, or other sensitive resources.
- Inspect and maintain temporary slope breakers throughout the construction project.

### 4.8 Sediment Barriers

Sediment barriers are intended to stop the flow of sediments and prevent the deposition of sediments into sensitive resources. They may be constructed of materials such as silt fence, staked hay or straw bales (straw only in agricultural lands), compacted earth (e.g., drivable berms across travel ways), sand bags, or other appropriate materials. Typical sediment barrier information is presented on *BMP Drawing Nos. 5 and 22*.

- At a minimum, install and maintain temporary sediment barriers across the entire construction right-of-way at the base of slopes greater than 5 percent where the base of the slope is less than 50 feet from a waterbody, wetland, or road crossing until revegetation is successful as defined in this Plan. Leave adequate room between the base of the slope and the sediment barrier to accommodate ponding of water and sediment deposition.
- Where wetlands or waterbodies are adjacent to and downslope of construction work areas, install sediment barriers along the edge of these areas, as necessary to prevent sediment flow into the wetland or waterbody.
- Install temporary sediment barriers at the base of slopes adjacent to road crossings until disturbed vegetation has been reestablished.

Unofficial FERC-Generated PDF of 20060517-0284 Received by FERC OSEC 05/16/2006 in Docket#: CP06-5-000


- Inspect and maintain all temporary sediment barriers throughout the construction project and after each rainfall.
- Maintain all temporary sediment barriers in place until permanent revegetation measures are successful or the upland areas adjacent to wetlands, waterbodies, or roads are stabilized.
- Contractor shall incorporate appropriate erosion/sediment control measures in pipe yards.
- Remove temporary sediment barriers from areas that are successfully revegetated. In agricultural lands, if access to restored farmlands is required to remove sediment barriers, access will be limited to light weight wide tired vehicles.

4.9 Mulch

- Apply mulch on all slopes (except in actively cultivated cropland) concurrent with or immediately after seeding, where necessary to stabilize the soil surface and to reduce wind and water erosion. Spread mulch uniformly over the area to cover at least 75 percent of the ground surface at a rate of 3 tons/acre of straw unless the County Soil and Water Conservation District, landowner, or land managing agency approves otherwise in writing. In agricultural lands, straw mulch application will be conducted at the discretion of the Agricultural inspector.
- Mulch can consist of weed-free straw, hay, wood fiber hydro-mulch, erosion control fabric, or some functional equivalent. Hay will not be utilized in agricultural lands.
- If mulching before seeding: increase mulch application on all slopes within 100 feet of waterbodies and wetlands to a rate of 3 tons/acre of straw or equivalent.
- Mulch before seeding if: Final cleanup, including final grading and installation of permanent erosion control measures, is not completed in an area within 20 days after the trench in that area is backfilled (10 days in residential areas); or, Construction or restoration activity is interrupted for extended periods, such as when seeding cannot be completed due to seeding period restrictions.
- On all dry, sandy sites and slopes greater than 8%, spread mulch uniformly over the area to cover at least 75% of the ground surface at a rate of 3 tons/acre of straw or hay or its equivalent, unless the County Soil and Water Conservation District makes other recommendations in writing. Hay will not be utilized in agricultural lands.
- If a mulch blower is used, the strands of the mulching material shall be at least 8 inches long to allow anchoring.
- Ensure that mulch is adequately anchored to minimize loss due to wind and water.
- When anchoring by mechanical means, use a mulch-anchoring tool to properly crimp the mulch to a depth of 2 to 3 inches. When anchoring with liquid mulch binders, use rates recommended by the manufacturer. Do not use liquid mulch binders within 100 feet of wetlands or waterbodies.
- Install erosion control fabric, such as jute thatching or bonded fiber blankets, at a minimum, on waterbody banks at the time of final bank stabilization. Anchor the erosion control fabric with staples or other appropriate devices.

4.10 Trench Dewatering

Trench dewatering is the removal of excess runoff and groundwater (that has accumulated and is occupying the ditch line) to allow for the installation of the pipe or the completion of a pipeline tie-in, and the dry backfilling (as defined below) of the ditch. The removal of any excess water within the ditch line prior to backfilling is critical in agricultural lands: and permits ditch inspection and allows for a drier

Unofficial FERC-Generated PDF of 20060517-0284 Received by FERC OSEC 05/16/2006 in Docket#: CP06-5-000


ditch to backfill the spoil material. This enables the right-of-way to be effectively restored sooner, by the relatively faster return of workable conditions, as opposed to extended waiting until spoil material backfilled in a wet ditchline dries enough to be able to have the heavy equipment work over. Typically, the trench is dewatered, and is maintained in a dewatered state not higher in water level than six inches above the top of the trench bottom sand bag pipe supports, during the backfilling activity ("dry backfilling").

Deleted: entire
Deleted:
Deleted: wet
Deleted: soil
Deleted: the
Deleted: generally

Trench dewatering management will be accomplished by using a combination of efforts or BMPs (See *BMP Drawing Nos. 5, 22, 28, 31, 35 and 39*) dependent upon the specific site conditions and may include the following:

- Sediment filtering bags *(BMP Drawing No. 28)* and/or other equivalent sediment control structures for pumped water should be used whenever water is pumped from the pipeline trench. Sediment filter bags (use only Non-woven Geotextile filter bags), when implemented and maintained properly, prevent the discharge of heavily silt-laden water - effectively trapping particles larger than approximately 150 microns. Filter bags shall be used in well-vegetated areas, providing additional filtration upon discharge. Discharge to agricultural lands will not be conducted in active crop areas unless dry conditions are present and with landowner permission. The pumping rate should not exceed the maximum recommended by the Manufacturer (for example: Pumping rate through the filter bags shall be no greater than 750 gpm or ½ the maximum specified by the manufacturer, whichever is less). The filter bags will be changed when they become half full. Their silt contents will not be deposited on agricultural lands.
- Discharge into approved upland vegetated (grassy) areas onto stable erosion resistant areas, located such that it does not allow the water to return to the right-of-way ditchline.
- Based on previous experience, filter bags have provided successful means in controlling the discharge of turbid waters If the water being discharged from the filter bag appears "milky" or excessively cloudy, then sediment corrals can be utilized to augment filter bag use, positioned at least 25 feet from any waterbody and closely monitored to ensure proper function to prevent turbid water from entering a waterbody.
- Trench dewatering using floating pump or supporting pump intakes to reduce sediments suspended in water.
- Use a splashboard or dissipation device at the point of discharge to prevent scouring of the ground.
- Filtration bags, a straw bale basin, filter cloth basins or a combination of these devices are acceptable methods of filtration for discharge of water in an insufficiently vegetated or wetland area.
- Pumping water to temporary holding areas (e.g., other sections of pipeline trench, nearby or crossed ditches, external portable tanks).
- *Planning dewatering into construction sequencing to minimize amount of dewatering required.* For example, during the lowering-in phase, dewatering should be accomplished before requisite construction activity occurs (such as in the morning) and backfill activity should be initiated as soon as possible following pipe installation to prevent the ditch from refilling with water when a high ground water table is present. In agricultural lands, dewatering level will be maintained, throughout backfilling operations, to no more than six inches above the top of the trench bottom pipe support sand bags to ensure dry backfilling.
- In agricultural lands trench dewatering activities will be coordinated with the Environmental Inspector by the Agricultural Inspector/Drainage Specialists.

Deleted: during

Unofficial FERC-Generated PDF of 20060517-0284 Received by FERC OSEC 05/16/2006 in Docket#: CP06-5-000


### 4.11 Trench Breakers

- Trench breakers are intended to slow the flow of subsurface water along the trench. Trench breakers may be constructed of materials such as sand bags, secrete bags, subsoil earth filled bags or equivalent. Topsoil shall not be used for filling trench breaker bags.
- *An Engineer or similarly qualified professional shall determine the need for and spacing of trench breakers.* Otherwise, trench breakers shall be installed at the same spacing as and upslope of permanent slope breakers (See BMP Drawing Nos. 6 and 8).
- In agricultural fields and residential areas where slope breakers are not typically required, install trench breakers at the same spacing as if permanent slope breakers were required (See BMP Drawing Nos. 6 and 8).
- At a minimum, install a trench breaker at the base of slopes greater than 5 percent where the base of the slope is less than 50 feet from a waterbody or wetland and where needed to avoid draining a waterbody or wetland.
- Trench breakers will be installed at intervals according to the table below and at additional locations, if necessary, in agricultural lands as recommended by the Agricultural Inspector. The base level of each breaker is established on the trench floor, prior to pipe laying, to ensure the completed breaker's control against significant water piping and internal erosion. The bulk remainder of each trench breaker will be installed after the pipe is laid in the ditch and prior to backfill. *(See BMP Drawing No. 6)*

Deleted: Except for agricultural fields and residential areas, t

Deleted: They

| Slope | Distance |
|---|---|
| 5 - 15% | 300 Feet |
| 15 - 30% | 200 Feet |
| >30% | 100 Feet |

In agricultural lands, at the direction of the Environmental/Agricultural Inspector trench breaker heights may be adjusted to full, one-half, two-thirds, or alternating heights based on field conditions.

### 4.12 Maintenance of Erosion Control Devices

Inspecting and ensuring the maintenance of temporary erosion control measures will be conducted at least:

- On a daily basis in areas of active construction or equipment operation.
- On a weekly basis in areas with no construction or equipment operation.
- Within 24 hours of 0.5 inch of rainfall.
- Slope breakers will be checked and repaired at the end of each day where construction traffic has disturbed them.

Unofficial FERC-Generated PDF of 20060517-0284 Received by FERC OSEC 05/16/2006 in Docket#: CP06-5-000


## 5 WATERBODY CROSSINGS

A summary of the waterbody crossings is presented in FERC Resource Report 2. Locations of the waterbody crossings are shown on the Project Alignment Sheets (Appendix 1A).

### 5.1 Construction Restrictions

***No construction may take place in or affecting banks of these streams (based on NYSDEC guidance) during the following periods:***

Fish Spawning or Migration

Wild Brown Trout, October 1 through May 15 (Shequaga Creek)
Stocked Brown Trout, April 1 through May 15 (Keuka Outlet)
Wild Brook Trout, October 1 through May 15 (Post Creek)
Warm water fishery of significance, May 1 through June 30 (Canandaigua Outlet)

### 5.2 Stream Buffer Area

Stream buffer areas must be maintained at all times. The buffer area is that area 50 feet from the top of banks on both sides of stream. Activities such as stacking cut logs, burning cleared brush, discharging water from trenches, welding pipe sections, refueling and maintaining equipment should be done outside of buffer areas. These areas should also be seeded and mulched immediately after pipeline installation. Stream crossings will be treated as a special construction crossing in order to minimize the amount of time required to complete construction. Construction equipment will not be parked or stored in the buffer area. No fuel storage, fuel transfer, oil change or hydraulic fluid additions shall occur within 100 feet of any waterway.

### 5.3 Maintenance of Stream Crossing Control Devices

Construction erosion control devices will be installed prior to earth disturbance of the area. They will be maintained at all times. Inspecting and ensuring the maintenance of temporary erosion control measures will be conducted at least:

- On a daily basis in areas of active construction or equipment operation.
- On a weekly basis in areas with no construction or equipment operation.
- Within 24 hours of 0.5 inch of rainfall.

### 5.4 Additional Work Space Areas

Construction staging areas for waterbody crossings will be as small as possible while still allowing for prefabrication of pipe segments that will cross the waterbody. Other additional workspaces, such as additional spoil storage areas, at waterbody crossings will also be limited to the size necessary to perform the required function. All temporary workspace areas will be located beyond the stream banks. A buffer strip of trees/vegetation is to be left undisturbed along high banks of all waterbodies and drainage's in temporary workspace areas (and permanent easement areas wherever practical). Sediment control barriers

Unofficial FERC-Generated PDF of 20060517-0284 Received by FERC OSEC 05/16/2006 in Docket#: CP06-5-000


shall be installed and maintained along the edge of the buffer strips (width of the buffer strips is to be specified and/or approved by Empire during construction.)

Where waterbody crossings and their workspace areas are contiguous with agricultural land, the soil resource of affected agricultural land will be protected against mixing of topsoil, subsoil, and substratum by the locating of extra workspace areas, as needed, for: soil segregation and stockpiling.

5.5 Spoil Pile Placement/Control

Trench spoil will be stored at least 10 feet beyond stream banks at waterbody crossings, unless specified otherwise. Spoil places up gradient of stream banks will be contained with sediment control devices to prevent spoil materials from flowing into waterbodies or off of the ROW. Spoil shall not be stored within waterbodies, unless specified otherwise.

5.6 Waterbody Crossing Procedures

Leave at least 10 feet of ground on either side of the waterbody as a natural, vegetative strip (except for the equipment crossings). Trees greater than 4 inches in diameter may be removed from the vegetative strip at the time of initial clearing, reducing the need for large clearing equipment to return to the site during ditching or lowering-in.

5.7 Pipeline Construction at Streams

- Install filter fence across the right-of-way prior to construction. (See *BMP Drawing No.* 5 for proper fence installation) Make any repairs to fence as necessary after each working day. Replace filter fence across the travel area with straw bales during construction. (See *BMP Drawing No.* 22 for proper installation of straw bales)
- The stream is not to be diverted or the flow restricted. No filter fence or straw bales are to be placed directly into stream flow.
- The pipe is to be readied outside the stream buffer area prior to trenching and then installed immediately.
- Install trench breakers at the edge of stream and at base of slopes during construction as per *BMP Drawing No.* 6. Spoil from banks is to be placed > 10 feet away from the stream behind filter fence or straw bales. Ditching is to be performed from stream banks where possible.

Unofficial FERC-Generated PDF of 20060517-0284 Received by FERC OSEC 05/16/2006 in Docket#: CP06-5-000


## 6 WETLAND CROSSINGS

A summary of the wetland crossings is presented in FERC Resource Report 2. Locations of the wetland crossings are shown on the Project Alignment Sheets (Appendix 1A).

### 6.1 General Guidelines

Pipeline construction will be necessary in wet areas or wetlands. Empire will insure that all construction personnel are informed that impacts on all vegetation will be kept to a minimum. Wide tracked equipment will be used and standing water will be maintained at normal levels to insure that water level and flow are kept at pre-construction levels. Where water levels are temporarily high, as a result of a recent heavy rainfall, the Company Representative may direct that the construction be postponed until after the water levels subside.

Vehicular traffic in wetlands and wet areas will be restricted to a minimum and access avoided to the extent possible. Wetland crossings will be treated as a special construction crossing in order to minimize the amount of time required to complete construction. Construction equipment will not be parked or stored in the wetland. No fuel storage, fuel transfer, oil change or hydraulic fluid additions shall occur within 100 feet of any wetland.

The following narratives described the proposed wetland crossing techniques to reduce construction-related impacts. Typical wetland crossing information is shown in *BMP Drawing Nos. 4 and 4A.* Modification to this plan may be made as dictated by soil moisture conditions at the time of construction.

#### 6.1.1 Construction in Dry Wetlands

Dry Wetland: No standing water or saturated soil at time of construction.

- Standard pipeline construction methods can be used in wetlands where soils are dry enough at the time of construction to support equipment.
- In dry wetlands topsoil segregation must be used (as long as there is sufficient topsoil present to allow for mechanical separation by equipment).
- Install filter fence across ROW at edge of wetland.
- If spoil and silt cannot be contained within the ROW (i.e., approved working limits), install filter fence at the edge of the construction ROW; remove during cleanup.
- Minimize vegetation clearing and stump removal within the wetland.
- Remove cut vegetation and stumps in trench line.
- Segregate topsoil over trench-line.
- Install trench breakers at each wetland boundary (on upland side).
- Restore topsoil and seed with Annual Ryegrass (see Revegetation section of this Plan).

#### 6.1.2 *Construction in Saturated Wetlands*

Saturated Wetland: Standing water or highly saturated soil at time of construction.

Unofficial FERC-Generated PDF of 20060517-0284 Received by FERC OSEC 05/16/2006 in Docket#: CP06-5-000


- Wetlands topsoil segregation is not required.
- Minimize vegetation clearing and stump removal.
- Only remove cut vegetation and stumps in trench line.
- Permanent slope breakers will be installed at the base of all slopes adjacent to wetlands.
- Clean rock with Geo-textile or timber mats can be used for the temporary road.
- Timber mats can only be two (2) layers deep.
- Remove any timber mats used during construction in wetlands.
- Weld pipe outside the wetlands and carry in or use the push pull method.
- Install trench breaker at each wetland boundary (on upland side).
- Do not use brush mats.
- Do not use upland soils for temporary roads.

## 6.2 Standard Pipeline Construction

Standard Pipeline Construction can be used in wetlands where soils are dry enough at the time of construction to support equipment. This crossing method requires the segregation of topsoil from subsoil (as long as there is sufficient topsoil present to allow for mechanical separation by equipment).

The construction procedures that will be used to cross small wetlands will be similar to those used on dry land areas. However, if the trench contains water, trench breakers will be left in the trench prior to entering the wetland. This procedure will minimize silt discharges into the wetland. If construction activities breach a permeable layer, the bottom of the trench will be sealed.

In addition, the point at which the trench enters and exits a wetland will be sealed with trench breakers to insure the wetlands hydrologic integrity. Backfill will be well compacted, especially at the edges of the wetland. Original topographic conditions will be restored after the completion of construction.

Wetlands crossed in short segments (less than 200 feet) or where hydrologic characteristics exist at the time of construction, construction will proceed similar to that on dry land. Except for the improvements needed for the construction travel area (equipment mat) and the possible use of certain special equipment such as a dragline for trenching and backfilling.

Construction in the larger wetland areas will generally use the "push technique". Board mats will be used to provide a working surface for the movement of equipment, personnel, and materials. The trench may be excavated using a dragline or clamshell dredge. The excavated material will be stored adjacent to the trench.

The pipe will be stored and joined at staging areas located outside the wetland. As necessary, the pipe will be weighted to provide negative buoyancy and temporary floats may be attached to the pipe to provide short-term positive buoyancy. After floating the pipe into place, these floats will be cut and the pipe will settle to the bottom of the trench. This operation will be repeated, with pipe sections fabricated, pushed into place, and subsequent sections welded together until the wetland crossing is complete. The excavated material will then be placed over the pipe to backfill the trench. To maintain flow patterns within the wetland, excess soil will be removed and spread over the banks and stabilized rather than mounded over the pipe.

Unofficial FERC-Generated PDF of 20060517-0284 Received by FERC OSEC 05/16/2006 in Docket#: CP06-5-000


Revegetation of most wetland areas disturbed during construction should occur naturally and is generally favored. Emergent and shrub wetland vegetation will be allowed to become re-established; however, tree size vegetation will be controlled within the permanently maintained right-of-way.

### 6.3 Equipment Pads

In wetlands with standing water the Empire representatives may direct that equipment pads be used to prevent unnecessary damage to the soil structure. Generally several equipment pads will be laid end to end in the construction travel area.

### 6.4 Clearing

- This method requires no special stabilization techniques because conditions can support construction equipment.
- No rubber tired equipment will be allowed to work in wetlands unless the equipment will not damage existing root systems and is approved by the Chief Inspector. Bulldozers will not be used to remove timber, trees, or brush. Trees and brush will be cut at ground level by tree shears, grinders, or chain saws.
- Tree stumps will be left in place, except within the trenchline or unless their removal is necessary to ensure the safety of workers (such as on steep side hill slopes). Tree stumps may only be removed from outside the trenchline if specifically authorized by the Chief Inspector. Leaving stumps in place will facilitate rapid vegetation of the wetland by indigenous tree species following construction. Stumps may be ground to a suitable height for safety reasons.
- All timber, brush, and grindings will be removed from the wetland.
- Debris and stumps will not be buried within wetlands but may be buried in the ROW outside of wetlands (in non-agricultural lands), where permitted.
- Trees located outside of the ROW will not be cut.
- The Environmental Inspector will photo document areas before and after clearing for use in later revegetation/restoration.

### 6.5 Grading

Extensive grading will normally be unnecessary because the topography of most wetlands is level. Grading will be limited to the areas directly over the trenchline, except where topography, such as side lopes, requires additional grading for safety reasons. Where grading is required, topsoil will be segregated and returned as an even layer to all graded areas.

### 6.6 Trenching

- The topsoil in wetlands will be stripped from the ditchline and segregated if: it is not saturated and of sufficient depth to allow mechanical separation. Topsoil stripping (in non-saturated conditions) will be performed up to a depth of 12 inches (e.g., all the topsoil material present or 12 inches will be segregated in areas with greater than 12 inches of topsoil). The segregated topsoil will be stockpiled separately from subsoil for later restoration of the ROW.

Unofficial FERC-Generated PDF of 20060517-0284 Received by FERC OSEC 05/16/2006 in Docket#: CP06-5-000


- Spoil will be contained with straw bales or silt fences to prevent the spoil from flowing off of the ROW or into waterbodies.

6.7 Lowering-in/Backfilling

- The trench will be backfilled with subsoil first. After the subsoil has been rough graded, topsoil will be replaced in an even layer. The topsoil contains seeds, rhizomes, and other plant propagules, which will aid rapid recolonization by indigenous wetland species.
- The Environmental Inspector must approve any additional spoil material imported from off the ROW.
- Where rock (boulders, etc.) was part of the surface features prior to construction of the pipeline, rock will be placed back in the wetland in approximately the same configuration, as had been the pre-construction situation. Photos will be taken of the ROW in these situations, both before and after, in order to document the nature of the situation.
- Trench breakers will be installed at both ends of the wetland.

Unofficial FERC-Generated PDF of 20060517-0284 Received by FERC OSEC 05/16/2006 in Docket#: CP06-5-000


# 7 RESTORATION

## 7.1 Cleanup

- *Commence cleanup operations immediately following backfill operations. Complete final grading*, topsoil replacement, and installation of permanent erosion control structures within 20 days after backfilling the trench (10 days in residential areas). In agricultural lands, deep ripping of the exposed right-of-way, rock cleanup, and disposal prior to topsoil replacement and deep subsoiling are part of the restoration process prior to grading (for details on agricultural land decompaction refer to Attachment 1). If seasonal or other weather conditions prevent compliance with these time frames, maintain temporary erosion controls (temporary slope breakers and sediment barriers) until conditions allow completion of cleanup. The project sponsor will file with the Secretary for the review and written approval of the Director, a winterization plan if construction will continue into the late autumn or winter season, or if restoration will not have been completed on agricultural lands by October 1, when moisture or temperature conditions could delay successful decompaction, topsoil replacement, or permanent seeding until the following year.
- A travel lane may be left open temporarily to allow access by construction traffic if the temporary erosion control structures are installed and inspected and maintained. When access is no longer required the travel lane must be removed and the right-of-way restored.
- Rock excavated from the trench may be used to backfill the trench only to the top of the existing bedrock profile. Generally, in agricultural lands, rock will not be returned to the trench any higher than 24 inches below the exposed (topsoil-stripped) construction surface in Ontario and Yates Counties and not higher than 30 inches below the exposed construction surface in Schuyler and Chemung Counties. However, if extensive areas of shallow bedrock (within 24 to 30 inches from native surface) are encountered, Empire will limit backfill of rock to a depth of not less than 30" below pre-existing grade. Rock that is not returned to the trench should be considered construction debris, unless approved for use as cover/surface stabilization or for some other use on the construction work areas by the landowner or land managing agency.
- Remove excess rock from at least the top 12 inches of soil in all actively cultivated or rotated cropland and pastures, hayfields, and residential areas. The size, density, and distribution of rock on the construction work area should be similar to adjacent areas not disturbed by construction.
- *Grade the construction right-of-way to restore pre-construction contours and leave the soil in the proper condition for planting.*
- No construction debris will be left on or buried in agricultural lands.
- Remove temporary sediment barriers when replaced by permanent erosion control measures or when revegetation is successful.
- Contractor shall restore and revegetate all disturbed pipe yard areas, including lime, fertilizer, seed and mulch or restore equivalent to pre-construction conditions.

Deleted: should

Deleted: spring

Deleted: to the extent practicable

Deleted: Remove construction debris from all construction work areas unless the landowner or land managing agency approves otherwise

## 7.2 Permanent Slope Breakers

- Permanent slope breakers are intended to reduce runoff velocity and divert water off the construction ROW, and prevent sediment deposition into sensitive resources. Permanent slope breakers may be constructed of materials such as soil, sandbags, or some functional equivalent.

Unofficial FERC-Generated PDF of 20060517-0284 Received by FERC OSEC 05/16/2006 in Docket#: CP06-5-000


- Construct and maintain permanent slope breakers in all areas, except cultivated areas (including rotation hayland and pastures) and lawns, using the spacing recommendations obtained from the local soil conservation authority or land managing agency.
- In the absence of written recommendations, use the following spacing unless closer spacing is necessary to avoid excessive erosion on the construction right-of-way: (See *BMP Drawing No. 8*)

| Slope | Distance |
|---|---|
| 5 - 15% | 150 Feet |
| 15 - 30% | 100 Feet |
| > 30% | 50 Feet |

- Construct slope breakers with a 2 to 3% outslope to divert surface flow to a stable area without causing water to pool or erode behind the breaker. In the absence of a stable area, construct appropriate energy-dissipating devices at the end of the breaker.
- Slope breakers may extend slightly (about 4 feet) beyond the edge of the construction right-of-way to effectively drain water off the disturbed area. Where slope breakers extend beyond the edge of the construction right-of-way, they are subject to compliance with all applicable survey requirements.

### 7.3 Permanent Restoration Measures

Permanent restoration and revegetation measures serve to control erosion and sedimentation by establishing a vegetative cover which protects the soil and by using mechanical structures which can divert or slow runoff and trap sediment. The Contractor shall restore all disturbed portions of the construction ROW and supplemental work areas, as approved by Company.

- Final grading shall be completed within 10 days after the ditch is backfilled, weather and soil moisture permitting.
- All construction debris shall be removed from the ROW and the ROW shall be graded so that the soil is left in the proper condition for planting.
- Where trench compaction has not been done, the ROW shall be graded to pre-construction contours, as practical, with a small crown of soil left over the ditch to compensate for settling, but not to interfere with natural drainage. Openings shall be left in the trench-line crown to allow for lateral surface drainage, as approved by Empire representatives (Agricultural Inspectors/Drainage Specialists).
- Where topsoil has been segregated, the topsoil shall be spread back along the ROW in an even layer (as further described in Attachment 1 Soil Protection and Subsoil Decompaction Plan).
- The Environmental Inspector may direct construction of permanent slope breakers to replace temporary erosion control barriers at road, waterbody and wetland crossings, as specified/approved. In addition, in agricultural lands, construction of permanent slope breakers at these areas will be reviewed and coordinated with the Agricultural Inspector.

### 7.4 Wetland and Waterbody Crossing Restoration

#### 7.4.1 Wetlands Crossings

Unofficial FERC-Generated PDF of 20060517-0284 Received by FERC OSEC 05/16/2006 in Docket#: CP06-5-000


- All work mats, timber temporary riprap, and other construction debris shall be removed following backfilling of the pipeline.
- Once backfilling is complete, affected areas original contours and flow regimes will be restored, with the exceptions of unnatural features and unstable grades.
- The ROW will be seeded with annual rye grass (see Revegetation and Maintenance sections of this Plan) to stabilize the area until indigenous wetland species can re-establish themselves. If the affected wetland is within an active agricultural parcel, reseeding will be performed according to landowner agreements.
- If bad weather limits the effectiveness of reseeding efforts, at the discretion of the Environmental Inspector and as allowed by all applicable permits, the ROW should be mulched (with straw only) to minimize erosion until conditions are suitable for reseeding. This temporary mulch cover should be monitored and maintained until conditions are suitable for completing restoration.
- No fertilizer or lime shall be used in wetlands.

### 7.4.2 Waterbody Crossings

- Native rock from the construction right-of-way will be used to stabilize the banks where available. Do not use stream material for stabilization.
- Install slope breakers at base of slopes as per *BMP Drawing No.* 8 prior to seeding and mulching (as described above in Section 7.3).
- Seed and mulch the area immediately after pipeline installation.

## 7.5 Residential Areas Restoration

Cleanup and restoration measures in residential areas will commence upon completion of the pipeline lowering in and backfilling. The restoration and mitigation efforts in residential areas will be completed in accordance with FERC requirements and include site-specific residential mitigation plans for residences located within 25 feet of the construction areas.

In residential areas topsoil replacement (i.e., importation of topsoil) is an acceptable alternative to topsoil segregation.

## 7.6 Agricultural Mitigation

The subsoil shall be decompacted prior to replacement of the segregated topsoil. Decompaction activities shall be conducted only during periods of relatively low soil moisture to ensure the desired mitigation and prevent additional subsurface compaction. Specific additional details are included in Attachment 1 to this Plan - Soil Protection and Subsoil Decompaction Plan.

The project sponsor will file with the Secretary for the review and written approval of the Director, a winterization plan if construction will continue into the late autumn or winter season, or if restoration will not have been completed on agricultural lands by October 1, when moisture or temperature conditions could delay successful restoration until the following year in agricultural lands – including subsoil decompaction, topsoil replacement, or permanent seeding.

Deleted: should

Deleted: spring

Unofficial FERC-Generated PDF of 20060517-0284 Received by FERC OSEC 05/16/2006 in Docket#: CP06-5-000


### 7.6.1 Subsurface Drainage Systems

Subsurface drainage systems may include a collection of subsurface pipes, such as perforated tubing or tile, that intercepts, collects and transports excess groundwater, within the soil, from a section of land. Systems may also include older emplacements of "stone drains" installed in the late 1800s and early 1900s. Subsurface drainage systems have a number of functions depending on the location and the conditions under which the tile has been installed. Drain tile can have the following impacts:

- Improvement of the seasonal soil condition in an area by regulating the seasonal water table and ground water flow serving to maintain the parcel or area for farming or similar use;
- Providing the ability to control the amount of surface water and groundwater in an existing wet area that is used for agriculture production;
- Intercepting and removing surface runoff through the ground as opposed to allowing the flow across the surface (which would increase the potential for erosion and loss of valuable topsoil);
- Serves as an outlet for an existing system or an area that may have an increase in ground saturation related to pipeline excavation activity;
- Collects groundwater for other uses such as: spring fed, shallow wells for domestic supply; irrigation; watering ponds for livestock or similar activity.

During the pre-construction planning (see Pre-Construction Planning section of this Plan) verification should be obtained from the land department files, the landowner and/or the County Soil and Water Conservation or USDA-NRCS office, as to the existing tile system that will be crossed. It is important to verify that all tiles have been distinctly marked on both sides of the excavated area and right-of-way edges (outer perimeter), for later reference. If necessary, make provisions to be able to maintain the system in working order, so as to limit impacts to existing crops from the excess groundwater for the duration of the construction activities.

During construction, drain tiles shall be identified, marked and information recorded by the drainage specialist (see Agricultural Inspection section of this Plan). If damaged during construction, repair or replacement to equivalent or better condition will be conducted by a qualified drain tile repair specialist. Typical repairs are shown on *BMP Drawing Nos. 30, 30A, and 42*, and generally include the following:

- Repairs should be designed to be installed with substantial support placed beneath the replaced section of tile to prevent the sagging of the tile line when the backfill material placed back in the trench settles, as shown on the attached repair detail.
- It is important to adequately size the repairs to match the existing tile system. Inadequately sized tile can negatively affect the entire system and render it non-functional.
- Should additional tile be necessary due to evident soil saturation, verify that the existing tile system can accommodate the additional amount of flow prior to connecting into that system. If necessary, a new system should be installed to facilitate the new lines or the existing system should be increased in size to accommodate the increase in flow amounts.
- At the time a tile is cut, the exposed ends of the drain pipe should be plugged or covered to prevent the tile from becoming clogged with dirt or rocks.

Unofficial FERC-Generated PDF of 20060517-0284 Received by FERC OSEC 05/16/2006 in Docket#: CP06-5-000


- The trenching crew or inspector shall carefully and immediately mark the location of cut or damaged tile in a prominent manner with lath, staking or flagging securely placed in the backfill or at the edge of the right-of-way.
- General tile replacement or repairs shall be performed in accordance with the requirements identified in this document including the material engineering details noted in BMP Drawing No. 30, and/or local ordinances or standards which may be higher, but not lower, in their level of requirements.
- Any tile that may be proposed for reuse must be approved by the Drainage Specialist prior to being used again.
- The original gradient of the tile line shall be re-established with the replacement tile. As an alternative, the tile line can be re-routed and/or replaced, but must function as well as the original line.

Unofficial FERC-Generated PDF of 20060517-0284 Received by FERC OSEC 05/16/2006 in Docket#: CP06-5-000


# 8 REVEGETATION

## 8.1 General

- The project sponsor is responsible for ensuring successful revegetation of soils disturbed by project-related activities.
- Restore agricultural lands based on site-specific soil data.
- Restore all turf, ornamental shrubs, and specialized landscaping in accordance with the landowners request, or compensate the landowner. Restoration work must be performed by personnel familiar with local horticultural and turf establishment practices.

## 8.2 Revegetation Operations

In general, rough grading will occur 0-3 days after backfilling. The right-of-way will then be limed and fertilized (no fertilizer or lime shall be used in wetlands). The lime and fertilizer will then be disked or blended into the worked soil. If necessary, a rock rake will then be run or stones will be hand picked by laborers. The right-of-way will then be finished with a final grade. Then seed and mulch will be applied at specified rates.

In agricultural areas, additional procedures for restoration and revegetation will be performed in accordance with those outlined in the Soil Protection and Subsoil Decompaction Plan (Attachment 1)

## 8.3 Soil Additives

Each affected farmland operator will be interviewed, by one of the respective workspread's project representatives within the appropriate time frame during planning prior to construction, for data on the most recent preconstruction application of soil additives per field. Also within the appropriate time frame, site-referenced soil testing of all affected agricultural land along the project at appropriate intervals to determine the respective soil's pH, percent of organic material, cation exchange capacity, and NPK (nitrogen, phosphorus, potassium) will be implemented. This information will be used to help establish the specific rate of lime and nutrients to be applied per field for: temporary seed cover applications; permanent seed mixtures; and (depending on time of restoration and other seasonal factors), row crop production the same season as restoration. Additional written data concerning soil modifiers will be obtained from the County Soil and Water Conservation District, or land management agencies. Based on the results of the site testing and other information, the site-specific fertilizer and soil pH modifiers will be incorporated into the top two inches of soil during or as soon as practicable after application.

## 8.4 Seeding Requirements

- In non-agricultural areas, prepare a seedbed in disturbed areas to a depth of 3 to 4 inches using appropriate equipment to provide a firm seedbed. When hydro-seeding, scarify the seedbed to facilitate lodging and germination of seed.
- *Seed disturbed areas in accordance with written recommendations for seed mixes, rates, and dates in* Attachment A unless a specific request is put forth by a property the landowner/operator, County Soil and Water Conservation District, the NYSDA&M, or land management agency. Unless requested by the farmland owner or operator, a long-term seeding is not required in actively cultivated croplands;

Deleted: this plan, obtained from

Deleted: the request of the landowner,

Deleted: Seeding

Deleted: unless requested by the landowner

Unofficial FERC-Generated PDF of 20060517-0284 Received by FERC OSEC 05/16/2006 in Docket#: CP06-5-000


however, a temporary seeding for winter cover that is consistent with the cropland's specific management will be applied. Permanent seeding, consistent with the affected field's specific management will be applied in long-term and rotation haylands and in pastures, and agricultural croplands, as well as agricultural CRP lands.

- **Perform seeding of permanent vegetation within the recommended seeding dates. If seeding cannot be done within those dates, use appropriate temporary erosion control measures and perform seeding of permanent vegetation at the appropriate time within the next recommended seeding season based on ROW soil workability (further described in Attachment 4 - NYSDA&M's Seeding, Fertilizing, and Lime Recommendation for Gas Pipeline Right-of-Way Restoration in Farmlands). Lawns may be seeded on a schedule established with the landowner.**
- **In the absence of written recommendations from the County Soil and Water Conservation Districts, seed all disturbed soils within 6 working days of final grading, weather and soil conditions permitting.**
- **Base seeding rates on Pure Live Seed. Use seed within 12 months of seed testing.**
- **Treat legume seed with an inoculant specific to the species using the manufacturer's recommended rate of inoculant appropriate for the seeding method (broadcast, drill, or hydro).**
- **In the absence of written recommendations from the local soil conservation authorities, landowner, or land managing agency to the contrary, a seed drill equipped with a cultipacker is preferred for seed application.**
- **Broadcast or hydro-seeding can be used in lieu of drilling at double the recommended seeding rates. Where seed is broadcast, firm the seedbed with a cultipacker or roller after seeding. In rocky soils or where site conditions may limit the effectiveness of this equipment, other alternatives may be appropriate (e.g., use of a chain drag) to lightly cover seed after application, as approved by the Environmental Inspector.**
- **Seed slopes steeper than 33% immediately after final grading, weather permitting.**
- **For two-year project timelines, the topsoil berm will be seeded when the soil in the pile is loose and fresh. The top of the berm will be flattened to allow for lightweight broadcast seeding over the entire berm.**

## 8.5 Temporary Mixtures - October 1 through March 31

General site preparation, lime and fertilizer application rates and temporary seed mixtures are detailed in Attachment 4 - NYSDA&M's Seeding, Fertilizing, and Lime Recommendation for Gas Pipeline Right-of-Way Restoration in Farmlands.

## 8.6 Permanent Mixtures - April 1 through September 30

General site preparation, lime and fertilizer application rates and permanent seed mixtures are detailed in Attachment 4 - NYSDA&M's Seeding, Fertilizing, and Lime Recommendation for Gas Pipeline Right of Way Restoration in Farmlands.

**In agricultural lands soils will be tested prior to construction by the Agricultural Inspector to determine appropriate site-specific lime and fertilizer application rates (modifying the general rates in Attachment 4 up or down accordingly).**

Deleted: beginning of

Deleted: *General site preparation:* Apply 1 ton of agricultural-grade limestone per acre, plus fertilizer at the rate of 50-50-50 per acre, and work in where possible. After seeding, mulch with straw at a rate of 3 tons per acre.¶
¶
Lime Fertilizer Seed Mulch¶
One (1) ton 150 lbs. per acre Winter Rye Straw:¶
per acre 50-50-50 170 lbs. per acre 3 tons per acre¶
¶
*Disturbed erosion-prone areas after September 30 will be addressed by application of one ton of agricultural grade limestone per acre plus fertilizer at the rate of 50-50-50 per acre (or recommended fertilizer rate from County Soil and Water Conservation Districts) and worked in where possible before seeding with winter rye. In Ontario and Yates County reduced lime application rates (below those provided in the general information above) may be acceptable, consultation with County Soil and Water Conservation District offices will be conducted to determine appropriate rates based on soil qualities in these areas. All areas seeded after September 30 will be mulched with straw at a rate of 3 tons per acre (except in wetland areas). Erosion prone areas will be further protected by the array of temporary erosion controls measures such as water bars, filter fence etc.¶
- - - - - Page Break - - - - -

Formatted: Normal, Line spacing: single, Tabs: Not at 1"

Deleted: Lime Fertilizer Mulch¶
One (1) ton per acre 300 lbs. per acre Straw:¶
10-20-20 3 tons per acre¶
¶

Deleted: above

Deleted: rates

Deleted: ¶
Seed mixes were selected based on adaptability for specific use, longevity, ability to regenerate, maintenance requirements, wildlife habitat and aesthetic values. Seed percentages are based on 100-pound bags. Apply seed at pounds per acre listed - rates shown assume drill seeder (broadcast feeder rates approximately 2x those prev ... [11]

Formatted: Bullets and Numbering

Unofficial FERC-Generated PDF of 20060517-0284 Received by FERC OSEC 05/16/2006 in Docket#: CP06-5-000


## 9 POST CONSTRUCTION ACTIVITIES

Conduct follow-up inspections of all disturbed areas up to two to three growing seasons (as specified below) to determine the success of revegetation.

### 9.1 *Monitoring and Maintenance*

- Revegetation in non-agricultural areas shall be considered successful if upon visual survey the density and cover of non-nuisance vegetation (or crops in cultivated cropland) is similar in density and cover to adjacent undisturbed lands.
- In agricultural areas, revegetation shall be considered successful if crop yields are similar to adjacent undisturbed portions of the same field. Monitoring will be performed by the Agricultural Inspector for not less than two seasons following the project's completion of initial restoration, or extended until restoration is deemed successful, to determine whether any follow up restoration activities are required. The monitoring shall include an assessment of plant populations, general appearance, and yields appropriate to the crops being monitored – as outlined in New York State Department of Agriculture and Markets – Special Crop Productivity Monitoring Procedures Paper (February 1993), included as Attachment 3 to this document.
- In wetland areas, revegetation and restoration progress will be recorded annually for three years post construction or until restoration is deemed successful.
- Continue revegetation efforts until revegetation is successful.
- Monitor and correct problems with topsoil replacement, soil profile compaction, rocks, drainage and irrigation systems resulting from pipeline construction in active agricultural areas until restoration is successful.
- Restoration shall be considered successful if the ROW surface condition, including the topsoil and the horizon of the upper subsoil is similar to adjacent undisturbed lands, construction debris is removed (unless requested otherwise by the landowner or land managing agency), revegetation is successful, and proper drainage for agriculture, including the mitigation of right-of-way water boils and saturation, has been restored.
- *Routine vegetation maintenance clearing shall not be done more frequently than every 3 years.* However, to facilitate periodic corrosion and leak surveys, a corridor not exceeding 10 feet in width centered on the pipeline may be maintained annually in a herbaceous state. In no case shall routine vegetation maintenance clearing occur between April 15 and August 1 of any year.
- Efforts to control unauthorized off-road vehicle use, in cooperation with the landowner, shall continue throughout the life of the project. Maintain signs, gates, and vehicle trails as necessary.

Deleted: up to

Deleted: .

Deleted: indicated in Reference Section

### 9.2 Reporting

The project sponsor shall maintain records that identify by milepost:

- Method of application, application rate, and type of fertilizer, pH modifying agent, seed, and mulch used.
- Acreage treated
- Dates of backfilling and seeding
- Names of landowners requesting special seeding treatment and a description of the follow-up actions.

Unofficial FERC-Generated PDF of 20060517-0284 Received by FERC OSEC 05/16/2006 in Docket#: CP06-5-000


- Any problem areas (including details on type or nature of issue) and how they were addressed.
- If requested by the landowner or operator, locations of installed or repaired drainage tile lines and outlets (maps) will be provided to the landowner.

The project sponsor shall file with the Secretary quarterly activity reports documenting problems, including those identified by the landowner, the NYSDA&M or the County Soil and Water Conservation District, and corrective actions taken for at least 2 years following construction.

### 9.3 Off Road Vehicle Control

Install and maintain measures to control unauthorized vehicle access to the ROW (see also Maintenance Section of this Plan). These measures may include:

- Signs
- Fences with locking gates
- Slash and timber barriers, pipe barriers, or a line of boulders across the ROW
- Conifers or other appropriate trees or shrubs across the ROW

Unofficial FERC-Generated PDF of 20060517-0284 Received by FERC OSEC 05/16/2006 in Docket#: CP06-52-000


## 10 GENERAL PIPELINE CONSTRUCTION SEQUENCING

### 10.1 Pre-Construction

Prior to mobilization, the Drainage Specialist/Agricultural Inspector will review drain tile systems, potential dewatering outlets, and potential outlets for interceptor systems *to mitigate subsequent ROW* water pools and saturation (see Pre-Construction Planning section of this Plan). In conjunction with the Environmental Inspector and the Project's construction management, the Drainage Specialist/Agricultural Inspector will review nearby or crossed ditches (see Section 4.10), for their adequacy as temporary holding areas for trench dewatering, at a minimum covering those segments of the Project's ROW through agricultural lands that are identified with high water table (HWT) soil. The staff will review the construction ROW plan, concerning agricultural lands for: a) the topsoil stockpiling locations being consistent with the upslope side of the ROW; b) the "extra work space areas" for their sufficiency of size to accommodate effective soil segregation and protection, for various special construction related activities (e.g., bore set ups and corresponding spoil areas; staging sites for waterway or road crossings, etc.); and c) location of all natural drainage swales on affected farmscapes, where adequate surface drainage gaps (through soil berms) are to be left as openings during topsoil stripping and spoil excavation management.

Deleted: *in areas of wet soils*

Before construction begins, the R.O.W. will be surveyed and staked. Other utility lines will be located and marked to prevent accidental damage during pipeline construction.

### 10.2 Staging Area

Staging areas will be set up when the contractor moves in to begin work. Proper access BMPs will be implemented prior to any sustained heavy traffic. If vehicles enter or exit the staging area onto a paved road, an entrance pad will be installed as per *BMP Drawing No.1*. Strip topsoil and segregate for staging areas (if any) residential or agricultural lands.

### 10.3 Handling of Hazardous Materials

All fuels, oils, chemicals, or other hazardous materials will be maintained in tightly sealed containers during transportation and storage. Fuels will be stored in equipment staging areas in stationary tanks. The tanks will be diked at the time of their placement in the staging area. Refueling will be performed in accordance with Section IV.A.1 of the FERC's Wetland and Waterbody Construction and Mitigation Procedures (Procedures); this includes storage of hazardous materials and the application of concrete coating. The FERC procedure is to store fuels and perform refueling at distances no less than 100 feet from a stream or wetland. In addition to the FERC's procedures, the project will not allow the maintenance of equipment within 100 feet of streams and wetlands unless not doing so may create a greater hazard if not corrected before moving equipment (e.g., patching an oil leak from a stranded backhoe). This is also shown on *BMP Drawing Nos. 4 and 4A*, note 2.

In the event of a spill or leakage, the contents will be transferred to another tank. The empty tank will be removed as well as all standing liquids caught by the dike. All obviously contaminated soils will be removed and photo-ionization meters will be used to identify any further contaminated soils. The excavated area will be backfilled with clean soil.

Unofficial FERC-Generated PDF of 20060517-0284 Received by FERC OSEC 05/16/2006 in Docket#: CP06-5-000


### 10.4 Access Roads

The project will make use of the existing ROW for access along the pipeline. Where additional access is necessary, existing access roads may be used upon agreement with the landowner. Expansion of existing access roads or creation of new access roads are subject to routine construction requirements (e.g., topsoil stripping in residential or agricultural areas). BMPs will be installed and maintained on these roads, and they will be reclaimed to a condition at least equal to their pre-construction condition unless otherwise agreed to with a landowner.

### 10.5 Clearing

This consists of the removal of trees and other obstructions from the ROW Clearing will be restricted to only that portion of the ROW necessary for actual construction. Trees, brush, and other obstructions will be cleared to permit safe and efficient use of machinery and other construction equipment. Permission will be obtained from landowners for use of access roads across their property to the ROW, for cutting trees and erecting temporary gates where necessary.

Various clearing methods will be employed, depending on tree size, contour of the land, and the ability of the ground to support clearing equipment. Marketable timber will be cut to specified lengths and stacked. All brush may be disposed of in one c\ several ways, depending on local restrictions and the terms of applicable permits and/or easement agreements: piled on the edge of the R.O.W. to provide cover for wildlife, burned, or chipped. Chipped wood must be removed from the ROW. After the removal of ROW vegetation temporary and permanent interceptor diversions will be installed as necessary to prevent erosion.

### 10.6 Grading

Rock outcrops, ridges, boulders, and tree stumps will be removed from the working area, and sharp topographical irregularities will be graded to ensure rapid and safe passage of the work crews. Backhoes and bulldozers will be employed for removal of tree stumps, rocks, and boulders. Burying them or setting them outside the construction area will serve to dispose of tree stumps in an approved manner, typically. No tree stumps will be buried or placed in agricultural lands. In agricultural lands as identified in Section 4.3.1 Topsoil Segregation, topsoil will be carefully stripped from the full work area (spoil stockpiling zone, trench area, pipe stringing/welding, and traffic areas) segregated from the subsoil, and preserved for later restoration of the ROW. Leveling the ROW may entail rock blasting in certain areas. Qualified, experienced personnel will conduct blasting operations. Licensed blasting experts will be employed, and blasting permits will be obtained when required by government authorities. Disposal of excess rock will be in accordance with the terms of any applicable permit and/or easement agreements.

Deleted: cultivated areas.

### 10.7 Rock Entrances

The Grading Crew will install rock entrances at public roads in accordance with BMP Drawing No. 1. Entrance Pad. If the job kicks off at a point where an entrance pad is required, the entrance pad will be installed as soon as the immediate area required for the pad is stumped and rock can be brought in. This shall be within forty-eight (48) hours from the time the Grading Crew move onto the location.

Unofficial FERC-Generated PDF of 20060517-0284 Received by FERC OSEC 05/16/2006 in Docket#: CP06-5-000


For other locations along the pipeline where entrance pads are required, the pads will be installed as the Grading Crew progresses to these locations, but no later than forty-eight (48) hours from the time they reach these locations.

10.8 Temporary Diversions

*Diversion ditches will be installed by the Grading Crew each time the crew progresses to a location where* an additional diversion ditch is required according to this Plan. Example information on diversion ditches and controls are included on *BMP Drawing Nos. 11, 14, 16, 17 and 25.* The Rough Grading Crew (at the leading edge of the grading process) will install rough diversions each day for that section of the ROW, which has been rough graded. The Finish Grade Crew (at the trailing edge of the grading process) will finalize the construction of the temporary diversion ditches. After that, each succeeding crew will be responsible for maintaining the diversion ditches on a daily basis.

10.9 Ditching

The ditch centerline will be staked following completion of grading. The ditch will be excavated by mechanical backhoe to a depth that provides at least three (3) feet of cover on top of the pipe, except in bedrock areas, where a minimum cover of two (2) feet will be provided. In agricultural lands a minimum of (4) feet of cover will be maintained. In areas where temporary filling has been utilized, the depth will be measured from the original ground surface. During construction, excavated material is typically stored along one side of the trench while the other side is used as a work area.

The method of excavation used will depend on the specific soil conditions encountered, however, it is expected that track excavators will be required. Ditch-line breakers, usually composed of sandbags or staked straw bales, will be installed on steep slopes. Where bedrock is encountered, attempt to rip the ditch with a backhoe. Only if this technique proves unsuccessful will blasting be used.

Landowners will be contacted sufficiently in advance of construction, regarding access ways across the trench. The owner, as well as the operator (if different from the owner), of affected agricultural land will be met with by one of the respective workspread's project representatives to designate farming related access ways across the trench. Where requested by either by landowners or farmland operators, access ways across the trench will be spaced at convenient intervals to allow landowners and land operators, all sizes of farming equipment requiring access, domestic livestock, and wildlife to cross the construction area.

Deleted:

Deleted:

Drainage Specialists in coordination with Empire land agents will contact landowners to locate drainage systems installed along the pipeline. If drainage tile is present, excavation of the trench will be to a depth sufficient to meet drainage tile clearance requirements. Damaged drain tiles will be promptly repaired or replaced (see Restoration section of this Plan).

10.10 Lowering In

Prior to lowering in, the ditch will be cleaned of all debris; the bottom smoothed and sand bags placed at a spacing of 15 feet or less, along the ditch bottom. The pipe string will be lifted from the skid supports

Unofficial FERC-Generated PDF of 20060517-0284 Received by FERC OSEC 05/16/2006 in Docket#: CP06-5-000


and lowered directly into the ditch by using a sufficient number of sideboom tractors equipped with rubber-tired cradles and/or slings and belts to prevent damage to the pipe and pipe coating.

In areas where the ditch bottom is irregularly shaped due to consolidated rock and/or where the excavated spoil materials are unacceptable for backfilling around the pipe, padding materials may be required. Sand or screened subsoil material from the ditch excavation, or a combination of each, will be used for padding. This padding material will be placed on the bottom of the ditch, at a depth of six (6) inches, just prior to lowering in the pipe.

10.11 Backfilling

*Before backfilling begins, a final inspection will be made to assure that all debris has been removed from* the ditch and that the pipe and pipe coating are undamaged.

Where rock, gravel, or other materials are encountered of a size and shape that could cause damage to the pipe or pipe coating, select padding material will be placed around the pipe to a thickness of six (6) inches, or rock shield will be applied.

While the ditch is open the Drainage Specialist will supervise the repair or replacement of drain lines. During backfilling, the Drainage Specialist or Agricultural Inspector (in conjunction with backfill inspector) will supervise the application of the necessary measures to ensure protection from damage and permanent drain line support for gravity flow. Prior to backfilling the trench, any drain tiles across the working side of the ROW will be inspected to ensure its integrity. Tiles crushed or otherwise damaged by construction activity will be repaired or replaced to pre-construction or better condition.

In the event dewatering is required for pipe installation and backfilling additional efforts described in Section 4.10 will be employed.

On steep slopes, trench breakers consisting of sandbags, gravel, cement, or cement-filled sacks will be installed in the trench over and around the pipe to provide full protection against wash-away in areas that are vulnerable. Compacted earth or other suitable low-permeability material will be used on gentler slopes and wet areas to minimize channeling of groundwater along the ditch line.

The ditch will be backfilled using either subsoil excavated from the pipeline ditch or fill from a remote source. Multiple passes of heavy equipment will be used to compact the fill material.

Restoration and cleanup activities will occur following the pipe installation and backfill as described in Section 7.

10.12 Hydrostatic Testing

Before any segment of new pipeline is placed in-service, it will be hydrostatically tested to ensure it conforms to ESP SC and D.O.T. specifications. Test water will be withdrawn from nearby ponds or streams or trucked in from an off-site location. This water will be pumped into the pipeline behind a fill pig. A high-pressure pump will be used to pressurize the pipeline to designed test pressure. The test pressure will be maintained for eight (8) hours. After test, the pipe section is depressurized and test water

Unofficial FERC-Generated PDF of 20060517-0284 Received by FERC OSEC 05/16/2006 in Docket#: CP06-5-000


is discharged to an approved location where it is released back into the environment (in accordance with the project Hydrostatic Test Plan). (Reference *BMP Drawing No. 3.*)

10.13 Restoration and Revegetation

Final grading, topsoil replacement, and installation of permanent erosion control structures will be completed within 20 days after backfilling the trench (10 days in residential areas). If soil moisture, seasonal or other weather conditions prevent compliance with these time frames, temporary erosion controls (temporary slope breakers and sediment barriers) will be maintained until conditions allow completion of cleanup.

The pipeline ROW will be carefully cleaned up and restored following construction. When the backfilling is completed, excess rock and similar materials will be removed from the ROW along with accumulated construction debris, and the ROW will be re-graded.

Topsoil will be re-spread over the ROW in areas where it had been segregated prior to ditching. Drainage ditches, terraces, roads, and fences will be restored to their former condition. Slope breakers will be installed to divert runoff away from disturbed areas. Agricultural lands will be restored to equal or better condition (see the Restoration section and attached Soil Protection and Subsoil Decompaction Plan).

Construction equipment and surplus materials will be removed from the ROW. Pipeline markers and warning signs will be erected at roads and interspersed at points along the ROW. The ROW will be re-seeded, fertilized, and mulched unless the landowner stipulates otherwise. Revegetation will be monitored periodically. If excessive erosion occurs, these areas will be stabilized and revegetated.

Unofficial FERC-Generated PDF of 20060517-0284 Received by FERC OSEC 05/16/2006 in Docket#: CP06-5-000


## 11 REFERENCES


- Federal Energy Regulatory Commission. Upland Erosion Control, Revegetation, and Maintenance Plan, January 2003.
- Federal Energy Regulatory Commission. Wetland and Waterbody Construction and Mitigation Procedures, January 2003.
- New York State Department of Agriculture & Markets. Pipeline Construction Projects- Agricultural Mitigation through Stages of Project Planning, Construction/Restoration and Follow-Up Monitoring, November 1997.
- New York State Department of Agriculture & Markets – Special Crop Productivity Monitoring Procedures, February 1993.
- New York State Department of Agriculture & Markets – New York State Farmlands Seeding, Fertilizer, and Lime Recommendations for Gas Pipeline Right-of-Way Restoration in Farmlands, undated.
- New York State Department of Environmental Conservation. SPDES General Permit for Stormwater Discharges from Construction Activity (Permit No. GP-02-01), January 2003.


Deleted: Right-of-Way

Unofficial FERC-Generated PDF of 20060517-0284 Received by FERC OSEC 05/16/2006 in Docket#: CP06-5-000


**Attachment 1**
**Soil Protection and Subsoil Decompaction Plan**

Unofficial FERC-Generated PDF of 20060517-0284 Received by FERC OSEC 05/16/2006 in Docket#: CP06-5-000


# EMPIRE CONNECTOR PROJECT

## SOIL PROTECTION
## and
## SUBSOIL DECOMPACTION MITIGATION PLAN

January 2005
*Revised May 2006*

Unofficial FERC-Generated PDF of 20060517-0284 Received by FERC OSEC 05/16/2006 in Docket#: CP06-5-000


## OVERVIEW OF PROCEDURES

**Successful soil protection and subsoil decompaction includes procedures generally associated with the following steps, with the detailed technical process outlined in the following Detailed Procedures Section:**

### Agency Coordination

**During project planning, construction, restoration and monitoring, agency coordination will be conducted at levels appropriate to meet the objectives in this Plan, including:**

1. **Coordinate with the appropriate agencies regarding:**
   - **Drain Tile and Irrigation Systems**
   - **Grazing Deferment**
   - **Soils**
   - **Agricultural** Biological Security,
2. **Obtain written recommendations from the County Soil and Water Conservation District** and the NYSDA&M **regarding erosion control and revegetation specifications, both temporary and permanent. Have available all written recommendations from these or other agencies for erosion control and revegetation specifications at the project location.**
3. The project sponsor agrees to consult with the appropriate agencies regarding agricultural biosecurity (noxious weeds and soil borne pathogens). If necessary, based on this consultation, Empire will develop specific practical cost-effective procedures to mitigate significant agricultural biosecurity risks, if they are determined to exist in the project area.

Deleted: Disease

Deleted: or land management agencies

Deleted: Develop specific procedures in coordination with the appropriate agency to prevent the introduction or spread of agricultural diseases resulting from construction and restoration activities.

### Topsoil Segregation

1. **Use topsoil segregation (or topsoil replacement) methods in residential areas, and topsoil segregation when the construction right of way is wider than 30 feet in agricultural lands (as defined by the Detailed Procedures in the following section):**
   - **Annually cultivated or rotated agricultural lands or developed improved pasture lands**
   - **Hayfields**
   - Land enrolled in USDA Conservation Reserve Program and maintained for return to tillable use, and other areas at the landowners request
2. **Prevent the mixing of topsoil with subsoil in agricultural lands by stripping all topsoil from the full work area.**
3. **In deep agricultural soils strip topsoil in accordance with Detailed Procedures outlined in the following section.**
4. **At stream crossings, segregate topsoil from pipe trench on stream banks to facilitate re-stabilization.**

Deleted: 0

### Drain Tiles

**All drainage tiles encountered shall be marked, maintained during construction, and restored or replaced to as good or better condition upon completion of construction. Tiles shall be referenced and flagged with stakes located adjacent to the ditch and the temporary construction right-of-way edges (outer perimeter).**

**Additional details regarding drain tile maintenance, repair and/or replacement are provided in Section 4.3.2 and along with the associated BMP drawings.**

Unofficial FERC-Generated PDF of 20060517-0284 Received by FERC OSEC 05/16/2006 in Docket#: CP06-5-000


Soil Compaction Mitigation

*Subsoil compaction of all agricultural lands shall be relieved in two phases. First the subsoil shall be deep* ripped (at times of appropriately low soil moisture) with uplifted stone removal (using standard rock picking equipment) occurring prior or replacement of the segregated topsoil. Following topsoil replacement a second phase of decompaction will occur, that includes Paratill® deep subsoiling, and supplemental excess stone removal, of the right-of-way (including the topsoil storage area).

Deleted: decompacted

Deleted: surface

DETAILED PROCEDURES

Topsoil Segregation

1.0 Use topsoil segregation methods in all the following areas:
- Annually cultivated or rotated agricultural lands.
- Hayfields, improved pastures[1], and rotation hay land/pastures.
- Other areas at the landowners' request

2.0 Prevent the mixing of topsoil with subsoil by stripping topsoil from the full work area and limit all excavating, spoil stockpiling, and traffic/equipment to the area cleared of topsoil.

- Note: Less than full available width of construction right-of-way may be used, provided that the topsoil and subsoil are segregated and all traffic/equipment and subsoil storage are limited to the area cleared of topsoil.

3.0 Stockpile both the spoil and topsoil in a manner that prevents pooling of water behind the soil piles (prevents excessive saturation of the soil), e.g.: cut a surface drainage gap through the segregated soil piles (lineal berms), and across the right-of-way, at swale crossings, and protect outlet points.

4.0 In deep agricultural soils (more than 12 inches of topsoil), stripping down to the actual depth of subsoil or 16 inches for segregation, whichever is less will be implemented. In soils with less than 12 inches of topsoil the entire topsoil layer and 1-2 inches of friable subsoil (as approved by the Agricultural Inspector) will be segregated.

5.0 *At stream crossings, only segregate topsoil from pipe trench on stream banks to facilitate re-*stabilization. Don't disturb the remainder of the actual bank. Agricultural topsoil stripping shall proceed out to the field's fringe, near, but not beyond the edge of the stream's riparian strip.

Soil Compaction Mitigation: Two Phases

1.0 First phase, deep-ripping the exposed subsoil. In all agricultural sections of the right-of-way where topsoil is stripped, the Contractor shall deep rip the exposed, construction surface subsoil with deep tillage devices such as a heavy duty ripping chisel or ripping chisel-plow, e.g.: V-frame or straight-frame ripper; or a heavy duty Paratill®.

The subsoil shall be thoroughly deep-ripped and rock picked prior to the replacement of segregated topsoil. The subsoil shall be deep-ripped to a depth of 18 to 22 inches as determined by the Agricultural Inspector. At least 40 hp of pull should be available per leg of implement, e.g.: 4 legs / 160 hp tractor.

Note: Due to the spacing between ripping legs (about 24 to 30 inches) a series of staggered, overlapping, "parallel rips" is employed to help ensure thorough breakup of the compacted mass of

[1] Improved pastures: land of generally tillable quality, used predominantly for grazing but largely open (free of trees, brush, and boulders).

Unofficial FERC-Generated PDF of 20060517-0284 Received by FERC OSEC 05/16/2006 in Docket#: CP06-5-000


subsoil material. "Kittering" or a broad "S" series of cross rips will immediately follow for sites where the former "parallel" technique is inadequate for breakup of larger chunks into smaller clods.

1.1. All stones greater than 4 inches in dimension, which are brought to the surface during the de-compaction process, shall be removed, during alternating passes of the deep ripper, rock rake, wind rower, and mechanical rock picker.

1.2. Upon approval by the Agricultural Inspector of the subsoil deep ripping and the stone removal, the topsoil that has been temporarily removed for the period of construction shall then be uniformly replaced, preferably using a light to moderate weight, LGP (low ground pressure), wide-track bulldozer.

1.3. All of the first phase deep-ripping and rock picking activities, as well as topsoil replacement and second phase de-compaction activities shall be conducted only during periods of relatively low soil moisture (i.e., not in a state of plastic consistency), as verified by the Atterberg field test, to ensure the desired mitigation and prevent additional soil profile compaction. Further technical details are provided in the Soil Moisture (Workability) section below.

1.4. Once the deep-ripping phase begins, further use of the right-of-way for any traffic is prohibited.

2.0 Second phase: Following topsoil replacement - Paratill® the right-of-way preferably with a deep angled-leg subsoiler so the soil profile will be loosened to a depth of 20 to 22 inches achieving the necessary shattering of the subsoil and remove any large size uplifted rocks.

2.1. Deep soil profile shattering (by Paratill® or other approved deep tillage implement) includes the entire width of the temporary construction right-of-way: all areas that where the topsoil was stripped and replaced plus the area where the topsoil berm had been stored.

2.2. Deep soil profile shattering tools with angled legs include the 3 to 5 leg Paratill ®.

2.3. Alternative deep sub-soiling tools include such implements as but not limited to the straight leg Unverferth Zone Builder ® with 5 legs and (for narrower right-of-ways or limited hp tractors) 3 leg parabolic shanks, heavy duty subsoilers (either straight frame or V-frame). Manufacturers' such as but not limited to John Deere ® and Brillion ®.

2.4. As noted for deep ripping (above) at least 40 hp of pull should be available per leg of implement for full depth effectiveness in right-of-way conditions.

2.5. If subsequent construction and cleanup activities result in further compaction, conduct additional deep subsoiling of the agricultural soil profile, as needed.

3.0 After the completion of deep, soil profile shattering the right-of-way is lightly to moderately disked and then limed, fertilized and seeded during friable (workable) soil moisture conditions to minimize re-compaction.

Trench Crowning and Mitigation of Trench Settling

Prior to trench crowning and during the trench backfilling, ripped or blasted bedrock or concentrated volumes of excavated stone or rock material (excavated from the trench) may be used to backfill the trench only to the top of the existing bedrock profile. Generally, in agricultural lands, rock will not be returned to the trench any higher than 24 inches below the exposed (topsoil-stripped) construction surface in Ontario and Yates Counties and not higher than 30 inches below the exposed construction surface in Steuben, Schuyler and Chemung Counties. However, if extensive areas of shallow bedrock (within 24 to 30 inches

Unofficial FERC-Generated PDF of 20060517-0284 Received by FERC OSEC 05/16/2006 in Docket#: CP06-5-000


from native surface) are encountered, Empire will limit backfill of rock to a depth of not less than 30" below pre-existing grade.

All excess rock not utilized, as trench backfill, will be hauled away. The remaining backfill materials will consist of suitable subsoil over the rock fill material.

1.0 Rough trench crowning will occur during the backfill operation of the construction phase, using subsoil materials over the trench to allow, and compensate, for trench settling to the extent possible prior to restoration. Right-of-way crowning is the placement of a small berm or crown using two distinct layers of soil materials over the trench line in agricultural areas. Installing a berm or crown along the trenchline compensates for the settling of backfilled soils following pipeline restoration. Typically, when backfilling, air pockets or voids will remain below grade. Eventually, the below grade soils will move into the voids and creates depressions at the surface. The crown material will compensate for this settling and can be used to fill in the area that would have otherwise been a depression. *BMP No. Drawing No. 38* shows typifies the procedure.

Deleted: T

Deleted: upland, non-residential and

Note: For the Empire Connector Project, if construction backfilling occurs between early autumn through winter Agricultural restoration will not be initiated until relatively drier soil conditions in late spring or early summer. Nearly all the trench settling will have occurred by mid-spring, giving the opportunity to compensate for trench settling using surplus, on site subsoil material immediately before restoration

Note: For the Empire Connector Project, the stockpiled topsoil (with the proper low moisture content) will be uniformly spread over the stripped portion of the affected right-of-way, after the initial deep ripping of the exposed subsoil and the rock cleanup has been completed, in late spring or early summer.

2.0 In areas where trench settling occurs after topsoil spreading, imported topsoil will be used to fill each depression. Attempts will be made to identify sources of topsoil free of weeds, including soliciting input from landowners of potential sources.

3.0 Topsoil from the right-of-way or from adjacent agricultural land will not be used to backfill depressions.

Soil Moisture (Workability) during Restoration, Compaction Testing during Monitoring and Remedial Action

1.0 Soil Moisture - During restoration activities check the soils for not exceeding friable (workable) moisture content using the following procedures (Atterberg field test for plastic soil consistency):

1.1 Exposed construction surface subsoil

1.1.1 Take a sample with a soil auger at a depth of 16 inches.

1.1.2 Roll the soil in your hand (Worm Method), to the diameter of an earthworm (1/8" diameter), and if the soil remains intact, in increments beyond 3/8" long, the soil is too wet (or "plastic"). If it breaks (crumbles) apart into 3/8" or shorter sections, the moisture content is correct (workable for deep ripping).

1.2 Topsoil stockpile (berm)

Unofficial FERC-Generated PDF of 20060517-0284 Received by FERC OSEC 05/16/2006 in Docket#: CP06-5-000


1.2.1 Take samples from vicinity of the berms' lower outside and inside slopes, 9 inches deep, and from the berms' inner core (at least 24 inches inside of the berm).

1.2.2 Administer the same test for each individual sample of topsoil material, as above in 1.1.2 (worm method). If all samples test friable (workable) topsoil replacement may proceed as long as favorable soil conditions remain.

1.2.3 If the topsoil is too wet, break open the topsoil stockpile (berm) and rough spread the soil partially across the right-of-way, allow it to air dry, and then conduct re-tests, until friable (usually about 2 days minimum of clear, dry weather) and then complete the topsoil replacement.

2.0 Compaction Testing during the Post Restoration Monitoring and Maintenance - Once the moisture of the restored, full soil profile on the affected right-of-way is at or near equilibrium with the adjacent off right-of-way land, soil profile compaction testing will be conducted by the Agricultural Inspector using an appropriate soil penetrometer or other soil compaction-measuring device (in the early spring following the year of initial restoration).

2.1 Cone-type soil penetrometer, using the 3/4 inch diameter cone, or similar cone-type soil compaction measuring tool, capable of withstanding applications of at least 400 pounds-per-square-inch (psi). When the readings inside the right-of-way are less than, equal with, or no more than twenty percent greater than the subsoil density readings outside the right-of-way, the subsoil de-compaction/shattering restoration is .atisfactory.

2.2 Test for soil compaction, obtaining readings at every 3-inch vertical interval from surface to 21 inches, or to the point of resistance (300 psi), through the topsoil and subsoil, across the project right-of-way in agricultural areas. These cross section tests shall be conducted at right-of-way inter-spacing (not to exceed 200 feet) sufficient to determine the need for remedial measures.

2.3 Tests shall be done on the same soil type under the similar moisture conditions and should include the following areas

2.3.1 Temporary stockpile areas

2.3.2 The trenched zone

2.3.3 Soil from undisturbed areas

2.3.4 The work area

2.3.5 Any traffic areas related to the project

2.4 It is standard to test each sampling site of a multi-site cross section at five to eight separate points of measurement of the soil profile's density, all taken in roughly the area of a thirty-inch diameter circle. The single highest and single lowest mechanical samples of the complete soil profile, per test site, are "thrown out". The remainder of the complete test samples recorded in 3-inch increments is used to calculate the soil profile's average density per 3-inch increment.

2.5 The soil profile compaction test results within the right-of-way will be compared with those of the adjacent off right-of-way portion of the affected farm field/soil unit.

2.6 If the "higher-than-threshold" measurements occur (for instance) in one out of six representative cross-sections of one long field and no similar excesses are measured in its neighboring croplands along the right-of-way, this should be viewed as an "isolated anomaly" and the soil restoration work on the subject field is generally considered adequate.

Unofficial FERC-Generated PDF of 20060517-0284 Received by FERC OSEC 05/16/2006 in Docket#: CP06-5-000


3.0 Where representative subsoil density on the right-of-way, or a repetitive zone within the right-of-way, exceeds the representative subsoil density outside the right-of-way, follow-up shattering of the soil profile will be performed using a deep, angled-leg subsoil tool in the respective areas of the right-of-way.

4.0 Follow-up deep shattering will be applied during periods of relatively low soil moisture to ensure the desired mitigation and to prevent additional subsoil compaction. (Refer to Soil Moisture section 1.0, above)

5.0 Oversized stone/rock material, which is uplifted to the surface as a result of the deep shattering, will be removed.

General Monitoring and Remediation

1.0 General right-of-way conditions to be monitored include topsoil thickness, relative soil density (compaction), relative content of rock and large stones, trench settling, crop development, drainage and repair of severed fences, etc. for not less than two years following the project's completion.

Topsoil deficiency and trench settling shall be mitigated with imported topsoil that is consistent with the quality of topsoil on the affected site. Crop development/production problems maybe the result of right-of-way trench saturation or residual compaction, in which case appropriate interceptor drainage and/or de-compaction mitigation will be implemented. Results will be compared to portions of the same field located outside of the right-of-way.

Unofficial FERC-Generated PDF of 20060517-0284 Received by FERC OSEC 05/16/2006 in Docket#: CP06-5-000


**Attachment 2**
**Best Management Practices (BMP) Drawings**

**(Included as Appendix 2B of FERC Submittal)**

Unofficial FERC-Generated PDF of 20060517-0284 Received by FERC OSEC 05/16/2006 in Docket#: CP06-5-000


Attachment 3

Special Crop Productivity Monitoring Procedures

Unofficial FERC-Generated PDF of 20060517-0284 Received by FERC OSEC 05/16/2006 in Docket#: CP06-5-000


Attachment 4

New York State Farmlands - Seeding, Fertilizing, and Lime Recommendations for Gas Pipeline Right-of-Way Restoration in Farmlands

Unofficial FERC-Generated PDF of 20060517-0284 Received by FERC OSEC 05/16/2006 in Docket#: CP06-5-000


| BMP Number | Title |
|---|---|
| 1. | Entrance Pad |
| 2. | Stream Crossing - Dam & Pump Energy Dissipater |
| 3. | Pipe Test Energy Dissipater |
| 4. | Wetland Crossing |
| 4A. | Wetland Travel Area |
| 5. | Filter Fence |
| 6. | Trench Breaker |
| 7. | Stream Bank Stabilization |
| 8. | Slope Breakers |
| 9. | Stream Mat |
| 10. | Road Crossing (Open Cut) |
| 11. | Diversion Ditch |
| 12. | Road Crossing (Bore) |
| 13. | Flume (Dry Ditch) Stream |
| 14. | Run Off Ditch |
| 15. | Erosion Blankets Channel Installation |
| 15A. | Specifications Erosion Blankets Channel Installation |
| 16. | Straw Bale Drop Structures For Drainage Channels |
| 17. | Rock Channel Filter |
| 18. | Road Culvert Extension Across Pipeline Trench |
| 19. | Temporary Culvert With Clean Rock Fill |
| 20. | Temporary Culvert Across Open Trench |
| 21. | Dam And Pump Stream Crossing |
| 22. | Straw Bale Installation |
| 23. | Topsoil Segregation |
| 24. | Erosion Blankets Slope Installation |
| 24A. | Specifications Erosion Blankets Slope Installation |
| 25. | Block And Gravel Drop Inlet Sediment Barrier |
| 26. | Cathodic Protection Anode Installation |
| 27. | Storm Water Channel |
| 28. | Dewatering Filter Bag |
| 29. | Road Culvert |
| 30. | Typical Drain Tile Repair Across Trench |
| 30A. | Typical Drain Tile Repair Across Trench |
| 31. | Energy Dissipater |
| 32. | Wooden Mat Bridge Pipeline Crossing |
| 33. | Bell Hole Next To Waterbody |
| 34. | Bell Hole Next To Wetland |
| 35. | Bell Hole Agricultural Field |
| 36. | Bell Hole Adjacent To Paved Road |
| 37. | Extra Work Spaces |
| 38. | Right-Of-Way Crowning |
| 39. | Discharge Method For Trench Dewatering |
| 40. | Parallel/New Submain Tile Installation |
| 41. | Lateral Intercept Drain |
| 42. | Typical Drain Tile Outlet |

Unofficial FERC-Generated PDF of 20060517-0284 Received by FERC OSEC 05/16/2006 in Docket#: CP06-5-000


**Page 30: [1] Deleted** **Steven Phillips** **5/12/2006 11:14 AM**

Seed mixes were selected based on adaptability for specific use, longevity, ability to regenerate, maintenance requirements, wildlife habitat and aesthetic values. Seed percentages are based on 100-pound bags. Apply seed at pounds per acre listed – rates shown assume drill seeder (broadcast feeder rates approximately 2x those presented). Seeds used on agricultural land are to be certified and fresh inoculant will be used for all legume seed (e.g., alfalfa, birdsfoot trefoil, etc) for all legumes (even when it is pre-inoculated).

**Empire General R.O.W. Mixture Mixture No. 2**

**Application Rate 40 lbs. per acre**
30% Fawn Tall Fescue
25% Annual Ryegrass
15% Timothy
10% Pardee Birdsfoot Trefoil
10% Alsike Clover
5% Yellow Blossom Clover
5% Red Top

**Empire (NFG) Seed**

**Steep Slopes >20%**
**Application Rate 50 lbs. per acre**
50% Fawn Tall Fescue
50% Penngift Crownvetch

**ESP Wet Areas Mixture**

**Application Rate 50 lbs. per acre**
70% Pennfine Perennial Ryegrass
24% Pardee Birdsfoot Trefoil
6% Red Top

**ESP Seed Mixture No. 4**

**Residential Lawns**
**Application Rate 10 lbs. per acre**
50% Kentucky Bluegrass
30% Pennlawn Fescue
10% Manhattan Perennial Ryegrass
10% Annual Ryegrass

**ESP (NFG) Seed Mixture No. 5**

**Agricultural Lands**
**Application Rate 30 lbs. per acre**
50% Alfalfa
50% Timothy

**ESP (NFG) Seed Mixture No. 6**

**Wetlands**
**Application Rate 40 lbs. per acre**
100% Annual Ryegrass

For agricultural land, additional alternative seed mixtures are available for use in the New York State Farmlands – Seeding, Fertilizer, and Lime Recommendations for Gas Pipeline Right-of-Way Restoration in Farmlands (New York State Department of Agriculture and Markets Division of Agricultural Protection and Development Services) indicated in the Reference Section.

# EMPIRE CONNECTOR PROJECT

SPILL PREVENTION CONTROL
and
COUNTERMEASURES

Prepared by: Bruce Clark
1100 State Street (Engineering Dept.)
Erie, PA 16501
July 20, 2004 (Revised by Haley & Aldrich January 29, 2005)

# EMPIRE STATE PIPELINE
# SPILL PREVENTION CONTROL and COUNTERMEASURES

## GENERAL DESCRIPTION

### Typical Equipment Used

Typical construction equipment used will be large dozers, backhoes, excavators, and sidebooms. Other equipment will be tractor-trailers, flatbed trucks, pickup trucks, and passenger vehicles. Auxiliary equipment used includes chain saws, air compressors, welding machines, water pumps, logging equipment, road graders and vibratory tampers, beveling torches, skidders, chippers, and rock rakes.

### Fueling & Vehicle Maintenance

During construction/removal, the large construction vehicles will be fueled in an upland field from a mobile multiple compartment-fueling vehicles. This vehicle will carry approximately 2500 gallons of fuel (gasoline/diesel). At no time will a vehicle be fueled, lubricated, or maintained within 100 feet of a stream or wetland.

It is anticipated that construction/removal forces will employ full-time mobile equipment mechanics to perform routine maintenance. This position will perform daily inspections, accomplish oiling, greasing, hydraulics, and fueling operations. Primary to this job is the preventative maintenance activities associated with mobile equipment; specifically monitoring equipment for potential leaking connections.

Smaller vehicles that will be traveling on town and state roads in addition to the pipeline right-of-way will be fueled and maintained by their operators at local gasoline stations whenever possible or at the staging area.

Auxiliary equipment will be fueled on site from OSHA-approved containers. Special precautions will be taken while filling equipment on the right-of-way to assure no fueling will occur within 100 feet of streams or wetlands. If a pump is within 100 feet of a stream or wetland, it must be filled by the use of a five-gallon or smaller container. An adequate supply of absorbent material will be on site when fueling occurs.

### Other Materials

No pesticides or herbicides will be used on this project.

Following pipeline installation, above grade piping, valves, blow-offs, etc. will be field painted. Preparation using a commercial grade blast will be followed by an application of an epoxy and urethane system.

## EMERGENCY RESPONSE PROGRAM

Our intent is to minimize the hazards of storing and transferring liquids during the project. Only the minimum volumes required for the efficiency of the operation will be on site, either in staging areas or on the right-of-way. Company and contractor personnel on the job will be trained in the proper handling of materials and in spill prevention, containment, and disposal procedures.

In staging areas, all hazardous liquids will be stored within diked areas, the volumetric capacity of which shall be at least 110% of the largest tank within the dike. Walls of the diked area shall be earth with an 8-mil plastic lining. Fluorescent fencing or similar material will delineate the storage area.

Along the right-of-way, fuels and other equipment related fluids will be handled in OSHA approved containers. Temporary daily storage and dispensing of these materials will occur a minimum of 100' from wetlands and streams.

Each material will be properly labeled. Material Safety Data Sheets describing proper handling and the hazards associated with each material will be available on site through the construction inspectors. A complete list of anticipated Material Safety Data Sheets is attached to this document.

*Company construction inspectors and contractor employees have received specific training in the handling of materials to be used on the job including:*

1. Hazmat training.
2. Chemicals present in the workplace.
3. Emergency Communication Procedures.
4. Observation and inspection techniques used to detect the presence or release of hazardous chemicals in the work area.
5. Signs and symptoms of human exposure.
6. Personal Protective Equipment requirements.
7. Emergency exposure procedures.
8. Spill Containment & Cleanup techniques.
9. Housekeeping requirements.

## SPILL, LEAK PREVENTION and RESPONSE

*NFG stocked Emergency Spill Control Kits are available at field office, with each work crew, or at convenient and accessible locations along the job.*

Much of the spill control program will rely on thoroughly considered material location within a job site, daily inspection and the care in handling potential contaminants. This will be reinforced with the construction inspectors during training specific to this project.

All inspectors will have had hazardous material training. This training includes methods and procedures on leak prevention, containment, and removal of hazardous spills.

Spill potential will be evaluated at each site used on the project prior to occupancy with special attention to streams and wetlands. Provisions will be made to locate potential contaminants on site so as to minimize movement within and off site should a spill occur. Where large volumes of potential contaminants will be located on site, containment facilities will be constructed.

All materials must be properly labeled, including contents and the start date of accumulation. Allowable storage times of containers are determined by the amount of waste generated per month. Adequate supplies of absorbent materials compatible with potential contaminants will be available on site. Site inspections should occur at an appropriate frequency to determine the integrity of storage facilities, containment facilities, the contractors' adherence to requested handling procedures, and housekeeping.

*Equipment and In the event of a leak or spill from either the mobile fuel truck or integral fuel tank on a piece of construction equipment, the following steps will be taken:*

1. Personnel will be mobilized to the leak or spill site and will contain the spill by constructing a dike or emergency containment structure. Use of absorbent may also be necessary.
2. Contents of a leaking container will be removed and placed in another tank.
3. Excavate all soil showing obvious signs of contamination.
4. Test with a photo-ionization meter for additional soil contamination and excavate any remaining contaminated soils.
5. If storage of contaminated soil is necessary; the soil shall be placed on an 8-mil plastic liner and covered with an 8-mil plastic liner.
6. The excavated area will be backfilled with clean soil.
7. Major spills will have soil samples taken and sent to a certified laboratory to ensure that all contamination has been removed.
8. Contaminated soils will be hauled by a standard triaxle (covered) or dump truck (covered) to a landfill authorized to take such material.
9. For contaminated soils identified as hazardous, arrangements will be made with a licensed hazardous waste hauler to transport the material to a registered landfill.
10. Spill kits, including absorbent pads, booms, and absorbent C, will be kept at the staging area at all times.

## MATERIAL and WASTE INVENTORY
**(Bulk Waste Disposal Plan)**

### Spill Control Kit

Haz-mat Response Absorbent Sheets, Goggles, Latex Gloves, Drum Liner, Tyvek Coveralls, Environmental Clean-up Material: Booms, Overpack Drum, Oil Off Water Pillow, Oil Off Water Skimmer

### Right-of-ways

Wood products such as logs, pulpwood, or cord wood that are the property of the private land owner will be stored along the right-of-way or at a designated point as determined by the land owner. The brush will be burned, if permitted by the landowner and the existing weather conditions, or piled along the edge of the right-of-way to provide a filter strip. Stumps may be buried on the non-travel side of the right-of-way or stacked on the existing brush piles to serve as animal shelter.

In the event unforeseen contaminated soil is discovered while excavating during this project, the material will be contained from moving off site. Local authorities will be notified. Disposal arrangements will be determined.

### Equipment

Waste bulk fluids such as oil, fuel, hydraulic fluid, and solvents will be stored separately in properly marked containers at the staging area until they can be removed. Containers will be labeled to indicate contents and the start date of accumulation. Allowable storage times of containers are determined by the amount of waste generated per month.

Store worn out parts for recycling at staging area.

### Miscellaneous

1. Methanol will be dispersed into an OSHA approved container and removed to an approved incinerator.
2. Expended welding supplies and coating and wrapping residue will be returned to storage containers at the staging areas, and then transported to an approved landfill.
3. Miscellaneous materials (seed bags, wire, lumber, non-hazardous scrap) will be separated and returned to storage containers at the staging area. These will be recycled or disposed of at an approved landfill.
4. Unused materials, not considered waste, will be returned to Company stock rooms.

## EMERGENCY CONTACTS

| | | **Mailing Address** |
|---|---|---|
| **1.** | **The National Response Center (NRC)**<br>800/424-8802 | U.S. Coast Guard<br>2100 Second St. SW<br>Washington, DC 20593 |
| **2.** | **On-Scene Coordinator (OSC)**<br>212/264-2525 | EPA Region II – New York<br>26 Federal Plaza<br>New York, NY 10278 |
| **3.** | **State Spill Hotline**<br>800/457-7362 | New York State<br>Dept. of Environmental Conservation<br>50 Wolf Road |

Albany, NY 12233-3520

Notification must be reported to the NYSDEC Hotline listed above within 2 hours.

**4. Local Authorities**

585-226-2466
(585) 226-5433

New York State Region 8
Dept. of Environmental Conservation
6274 E. Avon-Lima Rd. (Rtes. 5 & 20)
Avon, NY 14414-9519

**5. Poison Centers**

800/222-1222 – emergency — Poisoning incident

(585) 273-4155 – non-emergency — Finger Lakes Poison Center
U of Rochester Medical Center
601 Elmwood Avenue, Box 321
Rochester, NY 14642

**National Fuel Supply Corporation Dispatch Centers**

| | | |
|---|---|---|
| Buffalo | 800/833-1843 | |
| Erie | 800/458-0413 | Ext. 4947 |

# Appendix E3

## Algonquin Ramapo Expansion Project

- **Algonquin Erosion and Sedimentation Control Plan**

# EROSION AND SEDIMENTATION CONTROL PLAN

*Company:* **Algonquin Gas Transmission, LLC**

*Project:* **Ramapo Expansion Project**

*Location:* **Various Locations, including:**

**Rockland County, New York**
**Putnam County, New York**
**Morris County, New Jersey**
**New Haven County, Connecticut**
**Fairfield County, Connecticut**

*Prepared by:* **Environmental Construction Permitting**
**5400 Westheimer Court, SP-777**
**Houston, Texas 77056-5310**

**Effective January 24, 2005**

# TABLE OF CONTENTS


| | | | | Page |
|---|---|---|---|---|
| **1.** | **INTRODUCTION** | | | **1-1** |
| | 1.1 | Purpose of this Plan | | 1-1 |
| | 1.2 | Guidelines and Requirements | | 1-1 |
| | 1.3 | Surveys, Permits, and Notifications | | 1-2 |
| | 1.4 | Inquiries | | 1-2 |
| **2.** | **SUPERVISION AND INSPECTION** | | | **2-1** |
| | 2.1 | Responsibilities of the Environmental Inspector | | 2-1 |
| | 2.2 | Environmental Training for Construction | | 2-2 |
| **3.** | **CONSTRUCTION TECHNIQUES FOR NATURAL GAS PIPELINES** | | | **3-1** |
| | 3.1 | Typical ROW Requirements | | 3-1 |
| | 3.2 | Access Roads | | 3-1 |
| | 3.3 | Pipe and Contractor Wareyards | | 3-2 |
| | 3.4 | Off-ROW Disturbance | | 3-3 |
| | 3.5 | Construction Sequence | | 3-3 |
| | | 3.5.1 | Clearing | 3-4 |
| | | 3.5.2 | Installing Temporary Sediment Barriers | 3-5 |
| | | 3.5.3 | Grading | 3-5 |
| | | | 3.5.3.1 Topsoil Segregation | 3-5 |
| | | | 3.5.3.2 Tree Stump Removal and Disposal | 3-6 |
| | | | 3.5.3.3 Rock Disposal | 3-6 |
| | | 3.5.4 | Installing Temporary Interceptor Dikes | 3-7 |
| | | 3.5.5 | Trenching | 3-8 |
| | | | 3.5.5.1 Temporary Trench Plugs | 3-8 |
| | | 3.5.6 | Trench Dewatering | 3-8 |
| | | 3.5.7 | Pipe Installation | 3-9 |
| | | | 3.5.7.1 Stringing and Bending | 3-9 |
| | | | 3.5.7.2 Welding and Weld Inspection | 3-9 |
| | | | 3.5.7.3 Lowering-in | 3-9 |
| | | 3.5.8 | Backfilling | 3-9 |
| | | | 3.5.8.1 Permanent Trench Plugs | 3-10 |
| | | 3.5.9 | Hydrostatic Testing | 3-10 |
| | 3.6 | ROW Restoration and Final Cleanup | | 3-12 |
| | | 3.6.1 | Permanent Erosion Control | 3-13 |
| | | | 3.6.1.1 Permanent Interceptor Dikes | 3-13 |
| | | | 3.6.1.2 Erosion Control Fabric | 3-13 |
| | | 3.6.2 | Revegetation and Seeding | 3-14 |
| | | 3.6.3 | Mulch | 3-15 |
| | | 3.6.4 | Winter Stabilization | 3-15 |
| | 3.7 | Unauthorized Vehicle Access to ROW | | 3-16 |

**4. SPECIAL CONSTRUCTION METHODS 4-1**
4.1 Agricultural Areas 4-1
4.1.1 Drain Tiles 4-1
4.1.2 Irrigation 4-1
4.1.3 Soil Compaction Mitigation 4-1
4.2 Road Crossings 4-2
4.3 Residential Areas 4-2
4.3.1 Construction Procedures 4-2
4.3.2 Construction Techniques 4-2
4.3.3 Cleanup and Restoration 4-3

**5. WATERBODY CROSSINGS 5-1**
5.1 Waterbody Definitions 5-1
5.2 General Waterbody Procedures 5-1
5.2.1 Time Window for Construction 5-2
5.2.2 Temporary Equipment Bridges 5-2
5.2.3 Clearing and Grading 5-3
5.2.4 Installing Temporary Erosion and Sediment Control 5-3
5.2.5 Various Types of Crossings 5-4
5.2.5.1 General Crossing Procedures 5-4
5.2.5.2 Flumed Crossing 5-5
5.2.5.3 Dam and Pump Crossing 5-6
5.2.5.4 Wet Crossing 5-7
5.2.6 Restoration 5-8

**6. WETLAND CROSSINGS 6-1**
6.1 Definition 6-1
6.2 General Procedures 6-1
6.2.1 Clearing and Grading 6-1
6.2.2 Temporary Erosion and Sediment Control 6-2
6.2.3 Crossing Procedure 6-2
6.2.4 Cleanup and Restoration 6-3

**7. SPILL PREVENTION CONTROL 7-1**

**8. POST CONSTRUCTION ACTIVITIES 8-1**
8.1 Post-Construction Monitoring 8-1
8.2 Post-Construction Maintenance 8-2
8.2.1 Uplands 8-2
8.2.2 Waterbodies and Wetlands 8-2
8.3 Reporting 8-3

# APPENDICES

## APPENDIX A – FIGURES


1 Typical Construction Widths Acquiring New Permanent Right-of-Way

2 Typical Construction Widths Not Acquiring New Permanent Right-of-Way (Multiple Line System)

3 Typical Construction Widths Not Acquiring New Permanent Right-of-Way (Single Line System)

4 Access Road Cross Section

5 Rock Access Pad Installation and Maintenance

6 Typical Temporary Access Road Through Wetlands

7 Silt Fence Installation and Maintenance

8 Straw Bale Installation and Maintenance

9 Straw Bale Installation for a Check Dam in a Drainage Way

10 Storm Drain Inlet Protection

11 ROW Topsoil Segregation Techniques

12 Interceptor Dike Installation and Maintenance

13 Typical Trench Detail

14 Temporary Trench Plugs

15 Filter Bag

16 Permanent Trench Plugs

17 Trench Plug Detail

18 Dewatering Structure for Hydrostatic Testing

19 Alternate Dewatering Structure for Hydrostatic Testing

20 Chevron Interceptor Dike Installation and Maintenance

21 Rock-Lined Drainage Swale Installation and Maintenance

22 Typical Matting on Slopes

23 Erosion Control Fabric Installation

**APPENDIX A – FIGURES (CONT.)**


24 Drain Tile Repair Procedure

25 Typical Paved Road Crossing Control Measures (Open Cut)

26 Typical Paved Road Crossing Control Measures (Bored)

27 Temporary Equipment Bridge (Equipment Pads and Culverts)

28 Temporary Equipment Bridge (Crushed Stone and Culverts)

29 Temporary Equipment Bridge (Flexi-float or Portable Bridge)

30 Typical Flumed Crossing

31 Typical Dam and Pump Crossing

32 Typical Wet Crossing

33 Typical Matting of Streambanks

34 Rip Rap Replacement (Typical)

**APPENDIX B – SEED MIX RECOMMENDATIONS**

**APPENDIX C – SPILL PREVENTION CONTROL, AND COUNTERMEASURES (SPCC) PLAN/PREPAREDNESS, PREVENTION, AND CONTINENCY (PPC) PLAN**

# 1. INTRODUCTION

## 1.1 Purpose of this Plan

This Erosion and Sedimentation Control Plan (Plan) has been prepared for use by the Company and its contractors as a guidance manual for minimizing erosion of disturbed soils and transportation of sediments off the right-of-way (ROW) and into sensitive resources (wetlands, streams, and residential areas) during natural gas pipeline construction. The procedures developed in this Plan, which represent the Company's best management practices, are designed to accommodate varying field conditions while maintaining rigid minimum standards for the protection of environmentally sensitive areas.

This Plan is designed to provide specifications for the installation and implementation of soil erosion and sediment control measures while permitting adequate flexibility to use the most appropriate measures based on site-specific conditions. The intent of this Plan is to provide general information on the pipeline construction process and to describe specific measures that will be employed during and following construction to minimize impacts to the environment along the pipeline ROW.

The goal of this Plan is to preserve the integrity of environmentally sensitive areas and to maintain existing water quality by implementing the following objectives:

- Minimize the extent and duration of disturbance;
- Protect exposed soil by diverting runoff to stabilized areas;
- Install temporary and permanent erosion control measures; and
- Establish an effective inspection and maintenance program.

## 1.2 Guidelines and Requirements

The measures described in this Plan have been developed based on guidelines from the Federal Energy Regulatory Commission (FERC), United States Army Corps of Engineers (COE), the United States Fish and Wildlife Service (USF&W), the United States Department of Agriculture, and the Natural Resource Conservation Service, as well as from the Company's significant experience and practical knowledge of pipeline construction and effective environmental protection measures. Lessons and insights gained during pipeline construction projects along the Company's pipeline system and comments from agency representatives are also incorporated into this Plan.

Any deviation from the placement of the structures specified in the construction drawings, or changes in the design of control measures as set forth in this Plan, must be approved by the Company's Environmental Construction Permitting Department and must have the concurrence from the appropriate permitting agency.

Pursuant to changes in the FERC regulations, interstate pipeline companies are now required to comply with the FERC's Upland Erosion Control, Revegetation, and Maintenance Plan and the FERC's Wetland and Waterbody Construction and Mitigation Procedures (Plan and Procedures, 1/17/2003 Version), unless approval to deviate from the Plan and Procedures is received from the appropriate state agency.

The following identifies the differences between this Plan and the FERC's Plan and Procedures as well as the reasons behind the differences:

1. FERC Plan (Section V.C.1 and V.C.3): Perform compaction testing in residential areas disturbed by construction activities and perform appropriate soil compaction mitigation in severely compacted residential areas.

   This Plan: Compaction testing and mitigation are not required in residential areas.

   Reason to Deviate: This Plan requires that topsoil either be segregated or replaced in residential areas. Topsoil that is segregated or replaced results in little compaction and provides a suitable medium for grass. Most yard areas that are sown in grass do not require deep root penetration. In the event that the grass needs deeper root penetration, the subsequent freeze-thaw cycles of the upper portions of the subsoil will provide natural mitigation of any compacted areas of the ROW within 2-3 years. Post-construction monitoring will be conducted during this timeframe as discussed in Section 8.1.

## 1.3 Surveys, Permits, and Notifications

The Company shall perform the required environmental field surveys and acquire the necessary environmental permits prior to start of construction of the project. The Company shall notify the appropriate federal and state agencies prior to, during, and/or subsequent to the construction of the project, as identified in the Clearance Package/ Permit Book.

## 1.4 Inquiries

Inquiries regarding this Plan should be addressed to the Manager, Environmental Construction Permitting Department; shown on the front cover; P.O. Box 1642; Houston, Texas 77056. For field conditions requiring an immediate response, contact the Area Manager at the address shown on the front cover.

# 2. SUPERVISION AND INSPECTION

To effectively mitigate project-related impacts, the Plan must be properly implemented in the field. Quick and appropriate decisions in the field regarding critical issues such as stream and wetland crossings, placement of erosion controls, trench dewatering, spoil containment, and other construction related items are essential.

To ensure that the Plan is properly implemented, at least one Environmental Inspector (EI) will be designated by the Company for each construction spread during active construction or restoration. The EI will have peer status with all other activity inspectors and will report directly to the Resident Engineer/ Chief Inspector who has overall authority on the construction spread. On smaller projects, the EI role may be carried out by the Resident Engineer/ Chief Inspector or a Craft Inspector, as designated by the Company. The EI will have the authority to stop activities that violate the environmental conditions of the FERC certificate (if applicable), other federal and state permits, or landowner requirements, and to order corrective action.

## 2.1 Responsibilities of the Environmental Inspector

At a minimum, the EI shall be responsible for:

1. Ensuring compliance with the requirements of this Plan, the construction drawings, the environmental conditions of the FERC certificate (if applicable), proposed mitigation measures, other federal or state environmental permits and approvals, and environmental requirements in landowner easement agreements;
2. Identifying, documenting, and overseeing corrective actions, as necessary to bring an activity back into compliance;
3. Verifying that the limits of authorized construction work areas and locations of access roads are properly marked before clearing;
4. Verifying the location of signs and highly visible flagging marking the boundaries of sensitive resource areas, waterbodies, wetlands, or areas with special requirements along the construction work area;
5. Identifying erosion/sediment control and stabilization needs in all areas;
6. Identifying locations for dewatering structures and interceptor dikes to ensure they will not direct water into known cultural resources sites or locations of sensitive resources;
7. Verifying that trench-dewatering activities do not result in the deposition of sand, silt, and/or sediment near the point of discharge into a wetland or waterbody. If such deposition is occurring, the dewatering activity shall be stopped. The design of the discharge shall be changed by the EI to prevent reoccurrence;
8. Ensuring that subsoil and topsoil are tested in agricultural areas to measure compaction and determine the need for corrective action;

9 Advising the Chief Inspector when conditions (such as wet weather) make it advisable to restrict construction activities to avoid excessive rutting;

10 Ensuring restoration of contours and topsoil;

11 Verifying that the soils imported for agricultural or residential use have been certified as free of noxious weeds and soil pests, unless otherwise approved by the landowner;

12 Determining the need for and ensuring that erosion controls are properly installed and maintained, daily if necessary; to prevent sediment flow into wetlands, waterbodies, sensitive areas, and onto roads;

13 Inspecting temporary erosion control measures at least:

a. On a daily basis in areas of active construction or equipment operation;
b. On a weekly basis in areas with no construction or equipment operation; and
c. Within 24 hours of each 0.5 inch of rainfall.

14 Ensuring the repair of all ineffective temporary erosion control measures within 24 hours of identification;

15 Identifying areas that should be given special attention to ensure stabilization and restoration after the construction phase;

16 Ensuring that the Contractor implements and complies with the Company's Spill Prevention Control and Countermeasure (SPCC) Plan; and

17 Keeping records of compliance with the environmental conditions of the FERC certificate (if applicable), proposed mitigation measures, and other Federal or state environmental permits during active construction and restoration.

## 2.2 Environmental Training for Construction

If required by the FERC certificate, environmental training will be given to both the Company personnel and contractor personnel whose activities will impact the environment during pipeline construction. The level of training will be commensurate with the type of duties of the personnel. All construction personnel from the chief inspector, EI, craft inspectors, contractor job superintendent to loggers, welders, equipment operators, and laborers will be given some form of environmental training. In addition to the EI, all other construction personnel are expected to play an important role in maintaining strict compliance with all permit conditions to protect the environment during construction. Training will be given prior to the start of construction and throughout the construction process, as needed, and will cover the following issues:

- The specifics of this Plan and the SPCC Plan;
- Job or activity specific permit requirements;
- Company policies and commitments;
- Cultural resource procedures and restrictions;

- Threatened and endangered species restrictions; and
- Any other pertinent information related to the job.

# 3. CONSTRUCTION TECHNIQUES FOR NATURAL GAS PIPELINES

## 3.1 Typical ROW Requirements

Pipeline construction workspace requirements are a function of pipe diameter, equipment size, topography, geological rock formations, location of construction such as at road crossings or river crossings, pipeline crossovers, methods of construction such as boring or open-cut construction, or existing soil conditions encountered during construction. As the diameter of the pipeline being installed increases, so does the depth of trench, excavated spoil material, equipment size, and ultimately the amount of construction work space that will be required to construct the project. All construction activities are restricted to the ROW limits identified on the construction drawings. However, in limited, non-wetland areas, the construction ROW width may be expanded by up to 25 feet without approval from the FERC for the following situations:

1. To accommodate full construction ROW topsoil segregation;
2. To ensure safe construction where topographic conditions (i.e., side-slopes) or soil limitations exist; and
3. For truck turn-arounds where no reasonable alternative access exits in limited, non-wetland or non-forested areas.

Use of these limited areas is subject to landowner approval and compliance with all applicable survey, mitigation, and reporting requirements.

The U.S. Department of Transportation (DOT) and Occupational Safety and Health Administration (OSHA) have established minimum size and area requirements for worker safety involving construction activities. See Figures 1, 2, and 3 for typical construction ROW widths. Additional construction ROW may be required at specific locations to construct a pipeline including, but not limited to, steep side or vertical slopes, road crossings, crossovers, areas requiring topsoil segregation, and staging areas associated with wetland and waterbody crossings. These locations are shown on the construction drawings.

## 3.2 Access Roads

All access to the construction ROW will be limited to existing roads and minimized in wetlands to the extent practical. Additional access roads to the ROW are required at various points along the project ROW where other road crossings (paved or gravel/state/local roads) do not exist. Examples of types of access used include abandoned town roads, railroad ROWs, powerline service roads, logging roads and farm roads. Improvements to access roads (i.e., grading, placing gravel, replacing/installing culverts, and trimming overhanging vegetation) may be required due to the size and nature of the equipment that would utilize the road (Figure 4).

1. Access to the ROW during construction and restoration activities is permitted only by the new or existing access roads identified on the construction drawings.

2. Contractor shall maintain safe conditions at all road crossings and access points during construction and restoration. All access roads will be maintained during construction by grading and the addition of gravel or stone when necessary.

3. Contractor will implement all appropriate erosion and sedimentation control measures for construction/improvement of access roads.

4. Contractor shall ensure that all paved road surfaces utilized during construction are kept free of mud and debris to the extent practical.

5. If rock access pads are required by the permitting agencies in residential or active agricultural areas, rock shall be placed on nonwoven geotextile fabric to facilitate rock removal after construction (Figure 5).

6. All access roads across a waterbody must use an equipment bridge in accordance with Section 5.2.2.

7. The only access roads, unless otherwise permitted, that can be used in wetlands other than the construction ROW are those existing roads requiring no modification and no impact on the wetland.

8. Limit construction equipment operating in wetland areas to that needed to clear the ROW, dig the trench, fabricate and install the pipeline, backfill the trench, and restore the ROW. All other construction equipment shall use access roads located in upland areas to the maximum extent practical. Where access roads in upland areas do not provide reasonable access, limit all other construction equipment to one pass through the wetland using the ROW, whenever practical.

9. For access through a saturated wetland, unless otherwise authorized by agency permits, use timber mats or an equivalent (Figure 6).

## 3.3 Pipe and Contractor Wareyards

Pipe and contractor wareyards are required for storing and staging equipment, pipe, fuel, oil, pipe fabrication, and other construction related materials. The Contractor shall perform the following measures at pipe and contractor wareyards:

1. Strip and segregate topsoil in agricultural lands;

2. Install erosion control structures as directed by the EI, outlined in this Plan, or identified on the construction drawings, and maintain them throughout construction and restoration activities;

3. Implement and comply with the SPCC Plan; and

4. Restore and revegetate all disturbed areas in accordance with the measures outlined in this Plan and as directed by the EI.

## 3.4 Off-ROW Disturbance

With certain exceptions, which are required in order to comply with FERC Plan and Procedures, all construction activities are restricted to within the limits identified on the construction drawings (exceptions include the installation of slope breakers, installation of energy-dissipating devices, installation of dewatering structures, and drain tile repair which are subject to applicable survey requirements). However, in the event that off-ROW disturbance occurs, the following measures will be implemented:

1. The EI will immediately report the occurrence to the Chief Inspector and ROW Agent;

2. The conditions that caused the disturbance will be evaluated by the Chief Inspector and the EI, and they will determine whether work at the location can proceed under those conditions; and

3. If deemed necessary by the Chief Inspector and EI, one or more of the following corrective actions will be taken: immediate restoration of the original contours, seeding and mulching of the disturbed area, and/or installation of erosion control devices. The Company's Environmental Construction Permitting Department will be notified as soon as practical.

## 3.5 Construction Sequence

Natural gas pipelines are installed using conventional overland buried pipeline construction techniques. These activities are necessary for the installation of a stable, safe, and reliable transmission facility consistent with DOT requirements and regulations. This section provides an overview of the equipment and operations necessary for the installation of a natural gas pipeline, describes potential impacts that may occur from each operation, and identifies the measures that will be implemented to control these potential impacts. This section also discusses in detail the erosion and sediment control techniques that apply to each construction activity including clearing, grading, trenching, lowering-in of pipe, backfilling, and hydrostatic testing. ROW restoration will be addressed in Section 3.6.

Installation of the pipeline will typically proceed from one end of the construction spread to the other in an assembly line or "mainline" fashion. The spacing between the individual crews responsible for each interdependent activity is based on anticipated rate of progress. The activities listed below are normally performed in the following sequence:

- Survey and Flag the ROW;
- Clearing the ROW;
- Installing temporary sediment barriers;
- Grading the ROW;
- Installing temporary interceptor dikes;
- Trenching/excavating the trench;
- Pipe stringing and bending;

- Welding and weld inspection;
- Trench dewatering;
- Lowering the pipe into the trench;
- Backfilling the trench;
- Hydrostatic testing of pipe; and
- ROW restoration and clean-up.

Obstacles to the mainline technique are often encountered and are not considered to be out of the ordinary. These obstacles, which include side hill crossings, rock, wetlands, streams, roads, and residential areas, do not normally interrupt the assembly line flow.

### *3.5.1 Clearing*

- Clearing operations will include the removal of vegetation within the construction ROW. Various clearing methods will be employed depending on tree size, contour of the land, and the ability of the ground to support clearing equipment. Vegetative clearing will either be accomplished by hand or by cutting equipment. The following procedures will be standard practice during clearing:

1. Prior to beginning the removal of vegetation, the limits of clearing will be established and identified in accordance with the construction drawings;

2. All construction activities and ground disturbance will be confined to within the ROW shown on the construction drawings;

3. Clearly mark and protect trees to be saved as per landowner requests or as otherwise required;

4. All brush and trees will be felled into the construction ROW to minimize damage to trees and structures adjacent to the ROW. Trees that inadvertently fall beyond the edge of the ROW will be immediately moved onto the ROW and disturbed areas will be immediately stabilized;

5. Trees will be chipped or cut into lengths identified by the landowner and then stacked at the edge of the ROW or removed;

6. Brush and limbs may be disposed of in one or more of the following ways depending on local restrictions, applicable permits, construction Line List stipulations, and landowner agreements:

    a. Stockpiled along the edge of the ROW;
    b. Burned;
    c. Chipped, spread across the ROW in upland areas, and plowed in; or
    d. Hauled off site.

7. Existing surface drainage patterns will not be altered by the placement of timber or brush piles at the edge of the construction ROW.

### *3.5.2 Installing Temporary Sediment Barriers*

Sediment barriers, which are temporary erosion controls intended to minimize the flow of sediment and to prevent the deposition of sediments into sensitive resources, shall be installed following vegetative clearing operations. They may be constructed of materials such as silt fence, staked straw bales, compacted earth (e.g., drivable berms across travel lanes), sandbags, or an equivalent material as identified by the EI (Figures 7, 8, 9, 10). Hay bales may be used in lieu of straw bales with the following restrictions – hay bales shall not be used for mulching and the Contractor is responsible for their removal and disposal.

1. Install temporary sediment barriers at the base of slopes adjacent to road crossings and at waterbody and wetland crossings in accordance with Sections 5.2.4 and 6.2.2 respectively.

2. Do not stake or trench in place straw bales used on equipment bridges or on mats across the travel lane.

3. Inspect temporary sediment barriers daily in areas of active construction to ensure proper functioning and maintenance. In other areas, sediment barriers will be inspected and maintained on a weekly basis throughout construction, and within 24 hours following storm events.

4. Maintain all temporary sediment barriers in place until permanent revegetation measures are successful or the upland areas adjacent to wetlands, waterbodies, or roads are stabilized.

5. Remove temporary sediment barriers from an area when replaced by permanent erosion control measures or when the area has been successfully restored as specified in Section 8.1.

### *3.5.3 Grading*

The construction ROW will be graded as needed to provide a level workspace for safe operation of heavy equipment used in pipeline construction. The following procedures will be standard practice during grading:

#### *3.5.3.1 Topsoil Segregation*

Topsoil segregation methods will be used in all residential areas and when the construction ROW is wider than 30 feet in annually cultivated or rotated agricultural lands, cultivated pastures, hayfields, and other areas at the landowner's or land managing agency's request.

a. Prevent the mixing of topsoil with subsoil by stripping topsoil from either the full work area or from the trench line and subsoil storage area (ditch plus spoil side method) as stipulated in the Construction Contract or Line List (Figure 11).

b. Segregate at least 12 inches of topsoil in deep soils with more than 12 inches of topsoil. In soils with less than 12 inches of topsoil, make every effort to segregate the entire topsoil layer.

c. Where topsoil segregation is required, maintain separation of salvaged topsoil and subsoil throughout all construction activities.

d. For wetlands, segregate the top 12 inches of topsoil within the ditchline, except in areas where standing water is present or soils are saturated or frozen.

e. Leave gaps in the topsoil piles for the installation of temporary interceptor dikes to allow water to be diverted off ROW.

f. Topsoil replacement (i.e., importation of topsoil) may be used as an alternative to topsoil segregation if approved by the landowner and Chief Inspector.

g. Never use topsoil for padding, backfill or trench plugs.

#### ***3.5.3.2 Tree Stump Removal and Disposal***

a. Remove tree stumps in upland areas along the entire width of the permanent ROW to allow adequate clearance for the safe operation of vehicles and equipment. Stumps within the temporary ROW will be removed or ground to a suitable height that will allow the safe passage of equipment, as stipulated by the Chief Inspector or EI.

b. Dispose of stumps by one of the following methods, pending approval by the Chief Inspector and the landowner, and in accordance with regulatory requirements:

- Buried at a Company-approved off-site location (except in wetlands and agricultural areas);
- Burned;
- Chipped, spread across the ROW in upland areas, and plowed in; or
- Ground to grade in wetlands, excess chips will be removed for proper disposal.

c. Grading operations and tree stump removal in wetland areas will be conducted in accordance with Section 6.2.1.

#### ***3.5.3.3 Rock Disposal***

Rock (including blast rock) will be disposed of in one or more of the following ways:

a. Buried on the ROW or in approved construction work areas either in the ditchline or as fill during grade cut restoration in accordance with the Construction specifications. In cultivated/ agricultural lands, wetlands, and residential areas, rock may only be backfilled to the top of the existing bedrock profile;

b. Windrowed per written landowner agreement with the Company;

c. Removed and disposed of at a Company-approved site; or

d. Used as riprap for stream bank stabilization where allowed by an applicable regulatory agency(s) (Figure 34).

### *3.5.4 Installing Temporary Interceptor Dikes*

1. Temporary interceptor dikes, which are temporary erosion control measures intended to reduce runoff velocity and divert water off the construction ROW, shall be installed following grading operations (Figure 12). The interceptor dikes are to be installed on all disturbed areas as necessary to avoid excessive erosion. Temporary interceptor dikes may be constructed of materials such as compacted soil, silt fence, staked straw bales, or sand bags. Hay bales may be used in lieu of straw bales with the following restrictions – hay bales shall not be used for mulching and the Contractor is responsible for their removal and disposal.

   Temporary slope breakers must be installed on slopes greater than 5 percent where the base of the slope is less than 50 feet from waterbody, wetland or road crossing at the spacing indicated below (closer spacing should be used if necessary). Where the base of the slope is equal or greater than 50 feet from a waterbody, wetland, or road crossing, install interceptor dikes at a spacing necessary to avoid excessive erosion.

| **Slope (%)** | **Spacing (feet)** |
|---|---|
| <5 | No Structure |
| 5 - 15 | 300 |
| > 15 - 30 | 200 |
| > 30 | 100 |

2. Direct the outfall of each temporary interceptor dike to a stable, well vegetated area or construct an energy-dissipating device (silt fence, staked straw bales, erosion control fabric) at the end of the interceptor dike.

3. Position the outfall of each temporary interceptor dike to prevent sediment discharge into wetlands, waterbodies, or other sensitive resources.

4. Install temporary interceptor dikes across the entire ROW at all waterbody and wetland crossings, as well as the base of slopes adjacent to roads, when directed by the EI.

5. Drivable berms, which are smaller versions of interceptor dikes constructed of compacted soil or sand bags, may be used in place of staked straw bales at the entrances and exits of travel lanes at road crossings, waterbodies, and wetlands. They are installed the width of the travel lane at the start of the equipment crossing and made low enough to allow equipment and other vehicles to pass. Yet, they reduce and divert water runoff from sensitive environmental resources.

6. Inspect temporary interceptor dikes daily in areas of active construction to insure proper functioning and maintenance. In other areas, the interceptor dikes will be inspected and maintained on a weekly basis throughout construction, and within 24 hours following storm events.

### *3.5.5 Trenching*

The trench centerline will be staked after the construction ROW has been prepared. In general, a trench will be excavated to a depth that will permit burial of the pipe with a minimum of 3 feet of cover (Figure 13). Overland trenching may be accomplished using a conventional backhoe or a rotary wheel-ditching machine. In shale or rocky areas where the use of the wheel-ditching machine is limited, a tractor-drawn ripper will be employed to break and loosen hard substratum material. In areas where rock cannot be ripped, drilling and blasting may be required. A backhoe may then be used to remove rock and soil from the ditch.

The following procedures will be standard practice during ditching:

1. Flag drainage tiles damaged during ditching activities for repair; and
2. Place spoil at least 10 feet upgradient from the edge of waterbodies. Spoil will be contained with erosion and sedimentation control devices to prevent spoil materials or heavily silt-laden water from transferring into waterbodies and wetlands or off of the ROW.

#### *3.5.5.1 Temporary Trench Plugs*

Temporary trench plugs are barriers within the ditch that segment the continuous open trench. They typically consist of compacted subsoil or sandbags (soft) placed across the ditch or composed of unexcavated portions of the ditch (hard). Along steep slopes, they serve to reduce erosion and sedimentation in the trench and minimize dewatering problems at the base of slopes where sensitive environments such as waterbodies and wetlands are frequently located. In addition, they provide access across the trench for wildlife and livestock.

a. Do not use topsoil for installing temporary soft trench plugs.

b. Coordinate with the landowner to identify optimal locations for the placement of temporary hard trench plugs designed to provide access for livestock.

c. Temporary trench plugs may be used in conjunction with interceptor dikes to prevent water in the trench from overflowing into sensitive resource areas (Figure 14). Attempt to divert trench overflow to a well-vegetated off-ROW location or construct an energy-dissipating device.

### *3.5.6 Trench Dewatering*

Trench dewatering may be periodically required along portions of the proposed pipeline prior to and/or subsequent to installation of the pipeline to remove collected water from the trench.

1. Trench dewatering will be conducted (on or off the construction ROW) in such a manner that does not cause erosion and does not result in heavily silt-laden water flowing into any waterbody or wetland.

2. The intakes of the hoses used to withdraw the water from the trench will be elevated and screened to minimize pumping of deposited sediments.

3. Water may be discharged into areas where adequate vegetation is present adjacent to the construction ROW to function as a filter medium.

4. Where vegetation is absent or in the vicinity of waterbody/ wetland areas, water will be pumped into a filter bag (Figure 15) or through a structure composed of sediment barriers. When using filter bags, secure the discharge hose to the bag with a clamp.

5. Remove dewatering structures as soon as possible after the completion of dewatering activities.

### *3.5.7 Pipe Installation*

#### *3.5.7.1 Stringing and Bending*

Following trench excavation, pipe sections will be delivered to the construction site by truck or tracked vehicle, and strung out along the trench. Individual pipe sections will be placed on temporary supports or wooden skids and staggered to allow room for work on the exposed ends. Certain pipe sections will be bent, as necessary, to conform to changes in slope and direction of the trench.

#### *3.5.7.2 Welding and Weld Inspection*

Once the bending operation is complete, the pipe sections will be welded together on supports using approved welding procedures that comply with Company welding specifications. After welding, the welds will be inspected radiographically or ultrasonically to ensure their structural integrity.

#### *3.5.7.3 Lowering-in*

Lowering-in consists of placing the completed pipeline sections into the trench where a tie-in weld will be made. Lowering-in is usually accomplished with two or more sideboom tractors acting in unison and spaced so as not to buckle or otherwise damage the pipe. The pipeline will be lifted from the supports, swung out over the trench, and lowered directly into the trench. The equipment uses a “leap frogging” technique requiring sufficient area to safely move around other tractors within the construction ROW to gain an advanced position on the pipe.

### *3.5.8 Backfilling*

Backfilling consists of covering the pipe with the earth removed from the trench or with other fill material hauled to the site when the existing trench spoil is not adequate for backfill. Backfilling will follow lowering-in of the pipeline as close as is practical.

In areas where the trench bottom is irregularly shaped due to consolidated rock or where the excavated spoil materials are unacceptable for backfilling around the pipe, padding material may be

required to prevent damage to the pipe. This padding material will generally consist of sand or screened spoil materials from trench excavation.

1. Under no circumstances shall topsoil be used as padding material.

2. Excess rock, including blast rock, may be used to backfill the trench to the top of the existing bedrock profile in accordance with Company specifications. Rock that is not used to backfill the trench will be treated as described in Section 3.5.3.3.

3. Any excess material will be spread within the ROW in upland areas and land contours will be roughed-in to match adjacent topography.

4. The trench may be backfilled with a crown over the pipe to compensate for compaction and settling. Openings will be left in the completed trench crown to restore pre-construction drainage patterns. Crowning shall not be used in wetland areas.

#### ***3.5.8.1 Permanent Trench Plugs***

Permanent trench plugs are intended to slow subsurface water flow and erosion along the trench and around the pipe in sloping terrain (Figures 16, 17). Permanent trench plugs will be constructed with sand bags or an equivalent as identified in the permit requirements. On severe slopes greater than 30 percent, "Sakrete" may be used at the discretion of the Chief Inspector.

a. Topsoil shall not be used to construct trench plugs.

b. Permanent trench plugs, which are used in conjunction with interceptor dikes, shall be installed at the locations shown on the construction drawings or as determined by the EI. If not shown, use the following spacing:

| **Slope (%)** | **Spacing (feet)** |
|---|---|
| <5 | No Structure |
| 5 - 15 | 300 |
| > 15 - 30 | 200 |
| > 30 | 100 |

c. Trench plugs shall be installed at the base of slopes adjacent to waterbodies and wetlands, and where needed to avoid draining of a resource.

### ***3.5.9 Hydrostatic Testing***

Once the pipeline is completed and before it is placed into service, it will be hydrostatically tested for structural integrity. Hydrostatic testing involves filling the pipeline with clean water and maintaining a test pressure in excess of normal operating pressures for a specified period of time (typically 8 hours). The testing procedure involves filling the pipeline with test water, performing the pressure test, and discharging the test water.

1. The EI shall notify appropriate state agencies (as identified in the Hydrostatic Test Package) of the intent to use specific test water sources at least 48 hours before testing activities (unless waived in writing).

2. Pumps used for hydrostatic testing within 100 feet of any waterbody or wetland shall be operated and refueled in accordance with the SPCC Plan.

3. Do not use state-designated exceptional value waters, waterbodies that provide habitat for federally listed threatened or endangered species, or waterbodies designated as public water supplies, unless appropriate federal, state, and/or local permitting agencies grant written permission. Use only the water sources identified in the Clearance Package/Permit Book.

4. Screen the intake hose to prevent entrainment of fish and other aquatic life.

5. Maintain ambient, downstream flow rates to protect aquatic life, provide for all waterbody uses, and provide for downstream withdrawals of water by existing users.

6. Locate hydrostatic test manifolds outside wetlands and riparian areas to the greatest extent practical.

7. For an overland discharge of test water from a new pipeline, dewater into an energy dissipation device constructed of straw bales (Figures 18, 19).

8. For an overland discharge of test water from an existing pipeline, dewater into an energy dissipation device constructed of straw bales and absorbent booms (Figure 18). If required by the appropriate permitting agency, the test water may be discharged through an appropriate filtration system including frac tanks and/ or carbon filters.

9. Dewater only at the locations shown on the construction drawings or locations identified in the Hydrostatic Test Package.

10. Locate all dewatering structures in a well-vegetated and stabilized area, if practical, and attempt to maintain at least a 50-foot vegetated buffer from adjacent waterbody/wetland areas. If an adequate buffer is not available, sediment barriers or similar erosion control measure must be installed.

11. Regulate discharge rate, use energy dissipation device(s), and install sediment barriers, as necessary, to prevent erosion, streambed scour to aquatic resources, suspension of sediments, flooding or excessive stream flow.

12. Do not discharge into state-designated exceptional value waters, waterbodies which provide habitat for federally listed threatened or endangered species, or waterbodies designated as public water supplies, unless appropriate federal, state, and local permitting agencies grant written permission.

13. The EI shall sample and test the source water and discharge water in accordance with the permit requirements.

## 3.6 ROW Restoration and Final Cleanup

Restoration of the ROW will begin after pipeline construction activities have been completed. Restoration measures include the re-establishment of final grades and drainage patterns as well as the installation of permanent erosion and sedimentation control devices to minimize post-construction erosion. Residential areas will be restored in accordance with Section 4.3.3. Property shall be restored as close to its original condition as practical unless otherwise specified by the landowner.

1. The Contractor shall make every reasonable effort to complete final cleanup of an area (including final grading and installation of permanent erosion control structures) within 20 days after backfilling the trench in that area (within 10 days in residential areas). If seasonal or other weather conditions prevent compliance with these time frames, maintain temporary erosion controls (temporary interceptor dikes and sediment barriers) until conditions allow completion of cleanup.

2. The disturbed ROW will be seeded within 6 working days of final grading, weather and soil conditions permitting.

3. If final cleanup and seeding cannot be completed and is delayed until the next recommended growing season, the winter stabilization measures in Section 3.6.4 shall be followed.

4. Grade the ROW to pre-construction contours.

5. Spread segregated topsoil back across the graded ROW to its original profile.

6. Remove excess rock from at least the top 12 inches of soil to the extent practical in all rotated and permanent cropland, hayfields, pastures, residential areas, and other areas at the landowner's request. The size, density, and distribution of rock on the construction ROW should be similar to adjacent areas not disturbed by construction. The landowner may approve other provisions in writing.

7. A travel lane may be left open temporarily to allow access by construction traffic if the temporary erosion control structures are installed, regularly inspected and maintained. When access is no longer required, the travel lane must be removed and the ROW restored.

8. Remove all construction debris (used filter bags, skids, trash, etc.) from the ROW unless the landowner or land managing agency approves otherwise. Grade or till the ROW to leave the soil in the proper condition for planting.

### *3.6.1 Permanent Erosion Control*

#### *3.6.1.1 Permanent Interceptor Dikes*

Permanent interceptor dikes are intended to reduce runoff velocity, divert water off the construction ROW, and prevent sediment deposition into sensitive resources (Figure 12). Permanent interceptor dikes will be constructed of compacted soil. Sand bags or some functional equivalent may be used when directed by the EI.

a. Install permanent interceptor dikes in all areas, except cultivated areas and lawns, at the locations shown on the construction drawings or as directed by the EI. If not shown, use the spacing outlined for temporary interceptor dike installation in Section 3.5.4.

b. Install permanent interceptor dikes across the entire ROW at all waterbody and wetland crossings, and at the base of slopes adjacent to roads. When the ROW parallels an existing utility ROW, permanent interceptor dikes may be installed to match existing interceptor dikes on the adjacent undisturbed pipeline ROW.

c. Construct interceptor dikes with a 2 to 8 percent outslope to divert surface flow to a stable vegetative area without causing water to pool or erode behind the interceptor dike. In the absence of a stable vegetative area, install an energy-dissipating device at the end of the interceptor dike (Figure 12).

d. Interceptor dikes may extend slightly (about 4 feet) beyond the edge of the construction ROW to effectively drain water off the disturbed area. Where interceptor dikes extend beyond the edge of the construction ROW, they are subject to compliance with all applicable survey requirements.

e. Install chevron-style interceptor dikes on slopes when directed by the EI (Figure 20).

f. Install a rock-lined drainage swale along the ROW with restricted drainage features when directed by the EI. The drainage swale is generally 8 feet wide and a maximum of 18-24 inches deep (Figure 21).

g. On slopes greater than 30 percent, install interceptor dikes with erosion control fabric on the swale side.

#### *3.6.1.2 Erosion Control Fabric*

a. Install erosion control fabric at interceptor dike outlets and drainage swales as necessary or as directed by the EI (Figure 12, 21).

b. Install erosion control fabric or matting on slopes greater than 30 percent adjacent to roads or waterbodies (Figure 22). Anchor the erosion control fabric or matting with staples or other appropriate devices in accordance with the manufacturers' recommendations.

c. The EI will direct the installation of high-velocity erosion control fabric on the swale side of permanent interceptor dikes (Figure 23).

### *3.6.2 Revegetation and Seeding*

Successful revegetation of soils disturbed by project-related activities is essential. Seeding will be conducted using the following requirements:

1. Fertilize and add soil pH modifiers in accordance with the recommendations in Appendix B. Incorporate recommended soil pH modifier and fertilizer into the top 2 inches of soil as soon as practical after application;

2. Seed all disturbed areas within 6 working days of final grading, weather and soil conditions permitting;

3. Prepare seedbed in disturbed areas to a depth of 3 to 4 inches to provide a firm seedbed. When hydroseeding, scarify the seedbed to facilitate lodging and germination of seed;

4. Seed disturbed areas in accordance with the seed mixes, rates, and dates in Appendix B, except in upland areas where landowners or a land management agency may request alternative seed mixes. Seeding is not required in actively cultivated croplands unless requested by the landowner.

5. Perform seeding of permanent vegetation within the recommended seeding dates as outlined in Appendix B. If seeding cannot be done within those dates, use appropriate temporary erosion control measures discussed in Section 3.5.2 and perform seeding of permanent vegetation at the beginning of the next recommended seeding season. Mulch in accordance with Section 3.6.3. Lawns may be seeded on a schedule established with the landowner;

6. Base seeding rates on Pure Live Seed (PLS). Use seed within 12 months of seed testing;

7. Treat legume seed with an inoculant specific to the species using the manufacturer's recommended rate of inoculant appropriate for the seeding method (broadcast, drill, or hydroseeding); and

8. Uniformly apply and cover seed in accordance with Appendix B. In the absence of any recommendations from the local soil conservation authorities, landowner, or land managing agency to the contrary. A seed drill equipped with a cultipacker is preferred for application, but broadcast or hydroseeding can be used at double the recommended seeding rates. Where seed is broadcast, firm the seedbed with a cultipacker or roller after seeding. In rocky soils, or where site conditions may limit the effectiveness of this equipment, other alternatives may be appropriate (e.g., use of a chain drag) to lightly cover seed after application, as approved by the EI.

### *3.6.3 Mulch*

Mulch is intended to stabilize the soil surface and shall consist of weed-free straw or hay, wood fiber hydromulch, erosion control fabric, or some functional equivalent as approved by the EI and Chief Inspector. Hay shall not be used for mulch.

1. Mulch **before** seeding if:
   a. Final cleanup, including final grading and installation of permanent erosion control measures, is not completed in an area within 20 days after the trench in that area is backfilled (10 days in residential areas); or
   b. Construction or restoration activity is interrupted for extended periods, such as when seeding cannot be completed due to seeding period restrictions.

   NOTE: When mulching before seeding, increase mulch application on all slopes within 100 feet of waterbodies and wetlands to a rate of 3 tons/acre of straw or equivalent.

2. Apply mulch on all slopes (except in actively cultivated cropland) concurrent with or immediately after seeding, where necessary, to stabilize the soil surface and to reduce wind and water erosion. Spread mulch uniformly over the ROW at a rate of 2 tons/acre of straw or equivalent.

3. Mulch with woodchips only under the following conditions with prior approval from the Chief Inspector or the EI:
   a. Do not use more than 1 ton/acre; and
   b. Add the equivalent of 11 lbs/acre available nitrogen (at least 50 % of which is slow release).

4. Ensure that mulch is anchored to minimize loss by wind and water. Anchoring may be achieved by wet soil conditions (when approved by the EI), mechanical means, or with liquid mulch binders.

5 When anchoring with liquid mulch binders, use rates recommended by the manufacturer. **Do not use liquid mulch binders within 100 feet of wetlands and waterbodies.**

6. Install and anchor erosion control fabric, such as jute thatching, or bonded fiber blankets, on waterbody banks at the time of final bank recontouring. Anchor the erosion control fabric with staples or other appropriate devices.

### *3.6.4 Winter Stabilization*

In the event that the final phases of construction occur too late in the year for cleanup activities to adequately proceed, the following procedures will be implemented along the disturbed ROW at those locations until final restoration measures can be completed. The Company will file for review and written approval from the FERC, a winterization plan if construction continues into the winter season

where conditions could delay successful decompaction, topsoil replacement, or seeding until the following spring.

1. Install permanent interceptor dikes at specified intervals on all slopes, or as directed by the EI;

2. Install temporary sediment barriers adjacent to stream and wetland crossings, as well as other critical areas;

3. Seed and mulch the ROW and seed segregated topsoil piles in accordance with Appendix B; and

4. Remove flumes from waterbody crossings to reestablish natural stream flow.

## 3.7 Unauthorized Vehicle Access to ROW

The Company will offer to install and maintain measures to control unauthorized vehicle access to the ROW based on requests by the manager or owner of forested lands. These measures may include:

- Signs;
- Fences with locking gates;
- Slash and timber barriers, pipe barriers, or a line of boulders across the ROW; or
- Conifers or other appropriate shrubs with a mature height of 4 feet or less across the ROW.

# 4. SPECIAL CONSTRUCTION METHODS

The Company will utilize the following specialized construction procedures for agricultural areas, road crossings, and residential areas along the pipeline project. The project construction drawings, Line Lists, and Construction Contract will indicate the locations where specialized construction methods will be used.

## 4.1 Agricultural Areas

### *4.1.1 Drain Tiles*

1. Attempt to locate existing drain tiles and irrigation systems.
2. Develop procedures for constructing through drain tiled areas, maintaining irrigation systems during construction, and repairing drain tiles and irrigation systems after construction.
3. Engage qualified drain tile specialists, as needed, to conduct or monitor repairs to drain tile systems affected by construction. Use drain tile specialist from the project area, if available.
4. Probe all drainage tile systems within the area of disturbance to check for damage.
5. Repair damaged drain tiles to their original condition (Figure 24). Filter-covered drain tiles may not be used unless the local soil conservation authorities and the landowner agrees in writing prior to construction.
6. Ensure that the depth of cover over the new pipeline is sufficient to avoid interference with drain tile systems (existing or proposed). For adjacent pipeline loops in agricultural areas, install the new pipeline with at least the same depth of cover as the existing pipeline(s).

### *4.1.2 Irrigation*

1. Maintain water flow in crop irrigation systems, unless shutoff is coordinated with affected parties.
2. Repair any damage to the systems as soon as practical.

### *4.1.3 Soil Compaction Mitigation*

1. Test topsoil and subsoil for compaction at regular intervals in agricultural areas disturbed by construction activities. Conduct tests on the same soil type under similar moisture conditions in undisturbed areas to identify approximate preconstruction conditions. Use penetrometers or other appropriate devices to conduct tests.
2. Plow severely compacted agricultural areas with a paraplow or other deep tillage implement. In areas where topsoil has been segregated, plow the subsoil before replacing the segregated topsoil. Alternatively, make arrangements with the landowner to plant and plow under a “green manure” crop, such as alfalfa, to decrease soil bulk density and improve soil structure. If subsequent construction and cleanup activities result in further compaction, conduct additional tilling.

## 4.2 Road Crossings

Unpaved private and public roads supporting minimal traffic volumes are usually crossed by boring or by means of an open cut, if this method is approved by the owner or appropriate road management agency. An open cut crossing may involve closing the road to all traffic and constructing an adequate detour around the crossing area, or excavating one-half of the road at a time allowing through traffic to be maintained

(Figure 25). The trench for an open cut crossing is excavated with a backhoe or similar equipment, all backfill is compacted, and the road resurfaced. All state, national, and interstate highways as well as all railroads must be crossed by boring (Figure 26), unless the crossing permit allows an open cut crossing. Access roads shall be used in accordance with Section 3.2.

## 4.3 Residential Areas

### *4.3.1 Construction Procedures*

Specialized construction procedures will be utilized in areas of heavy residential or commercial/ industrial congestion where residences or business establishments lie greater than 25 feet but less than 50 feet from the edge of the construction ROW.

1. Install safety fence at the edge of the construction ROW for a distance of 100 feet on either side of the residence or business establishment.

2. Attempt to maintain a minimum distance of 25 feet between any residence/business establishment and the edge of the construction work area for a distance of 100 feet on either side of the residence/business establishment.

3. Attempt to leave mature trees and landscaping intact within the construction work area unless the trees and landscaping interfere with the installation techniques or present unsafe working conditions.

### *4.3.2 Construction Techniques*

In addition to the previously identified specialized procedures, smaller "spreads" of labor and equipment, operating independent of the mainline work force, will utilize either the stove pipe or drag section pipeline construction techniques in those areas of congestion where a minimum distance of 25 feet cannot be maintained between the residence(or business establishment) and the edge of the construction work area. In no case shall the temporary work area be located within 10 feet of a residence unless the landowner agrees in writing, or the area is within the existing maintained ROW. The following techniques shall be utilized for a distance of 100 feet on either side of the residence or business establishment at the locations identified in the Construction Contract and/or Line List.

1. The stove pipe construction technique is a less efficient alternative to the mainline method of construction, typically used when the pipeline is to be installed in very close proximity to an

existing structure or when an open trench would adversely impact a commercial/industrial establishment. The technique involves installing one joint of pipe at a time whereby the welding, weld inspection, and coating activities are all performed in the open trench. At the end of each day after the pipe is lowered-in, the trench is backfilled and/or covered with steel plates or timber mats. The length of excavation performed each day cannot exceed the amount of pipe installed.

2. The drag section construction technique, while less efficient than the mainline method, is normally preferred over the stove pipe alternative. This technique involves the trenching, installation, and backfill of a prefabricated length of pipe containing several segments all in one day. At the end of each day after the pipe is lowered-in, the trench is backfilled and/or covered with steel plates or timber mats. Use of the drag section technique will typically require adequate staging areas outside of the residential and/or commercial/industrial congestion for assembly of the prefabricated sections.

### *4.3.3 Cleanup and Restoration*

1. Reseed all disturbed lawns with a seed mixture acceptable to landowner or comparable to the adjoining lawn.

2. Landowners shall be compensated for damages to ornamental shrubs and other landscape plantings based on the appraised value as set forth in the Guide for Plant Appraisal, authored by the Council of Tree and Landscape Appraisers (CTLA), 8$^{th}$ Edition and published in 1992 by the International Society of Arboriculture.

3. Landowners shall be compensated for damages in a fair and reasonable manner, and as specified in the damage provision within the controlling easement on each property.

# 5. WATERBODY CROSSINGS

The following section describes the construction procedures and mitigation measures that will be used for pipeline installations at waterbodies. The intent of these procedures is to minimize the extent and duration of project related disturbances within waterbodies.

## 5.1 Waterbody Definitions

The term "**waterbody"** as used in this Plan includes any natural or artificial stream, river, or drainage with perceptible flow at the time of crossing, and other permanent waterbodies such as ponds and lakes. In this Plan, waterbodies are characterized into three main categories depending on the width of the waterbody. The categories are as follows:

- A **"minor waterbody"** includes all waterbodies less than or equal to 10 feet wide at the water's edge at the time of construction.
- An "**intermediate waterbody"** includes all waterbodies greater than 10 feet wide but less than or equal to 100 feet wide at the water's edge at the time of construction.
- A "**major waterbody"** includes all waterbodies greater than 100 feet wide at the water's edge at the time of construction.
- A "**state designated waterbody**" includes all perennial waterbodies that support coldwater fisheries and warmwater fisheries considered significant by the state.
- A "**non-state designated waterbody**" includes intermittent drainage ditches, intermittent streams, and perennial warmwater streams **not** considered significant by the state.

The waterbody crossing procedures described in this Plan comply with the Section 404 Nationwide permit program terms and conditions (33 CFR Part 330).

## 5.2 General Waterbody Procedures

Pipeline construction across waterbody channels may result in short term water quality impacts. Decisions regarding waterbody crossing techniques will be based on agency consultations. Mobilization of construction equipment, trench excavation, and backfilling will be performed in a manner that will minimize the potential for erosion and sedimentation within the waterbody channel. Erosion control measures will be implemented to confine water quality impacts within the immediate construction area and to minimize impacts to downstream areas. The length of the crossing, the sensitivity of the area, existing conditions at the time of the crossing, and permit requirements will determine the most appropriate measures to be used.

### *5.2.1 Time Window for Construction*

1. Unless expressly permitted or further restricted by the appropriate state agency in writing on a site-specific basis, instream work, except that required to install or remove equipment bridges, must occur during the following time windows:
   a. Coldwater Fisheries – June 1 through September 30; and
   b. Coolwater and Warmwater Fisheries – June 1 through November 30.

### *5.2.2 Temporary Equipment Bridges*

A temporary equipment bridge is a structure that may be installed across a waterbody to provide a means for construction equipment to cross the stream while minimizing impacts to the channel bottom or banks.

1. Until the equipment bridge is installed, only clearing equipment and equipment necessary for installation of equipment bridges may cross the waterbody and the number of crossings shall be limited to one crossing per piece of equipment, unless otherwise authorized by the appropriate permitting agency.

2. Construct equipment bridges to maintain unrestricted flow and to prevent soil from entering the waterbody. Examples of such bridges include:
   a. Equipment pads and culverts (Figure 27);
   b. Clean crushed stone and culverts (Figure 28);
   c. Flexi-float or portable bridges (Figure 29); or
   d. Equipment pads or railroad car bridges without culverts
3. Construct crossings as close to perpendicular to the axis of the waterbody channel.

4. Design and maintain each equipment bridge to withstand the highest flows that would occur. Align culverts/flumes to prevent bank erosion or streambed scour. If necessary, install energy dissipating devices downstream of the culverts.

5. Do not use soil to construct or stabilize equipment bridges.

6. Design and maintain equipment bridges to prevent soil from entering the waterbody.

7. Remove equipment bridges as soon as practical after permanent seeding unless agency permits authorized that the bridge remains in place.

8. If there will be more than 1 month between final cleanup and the beginning of permanent seeding and reasonable alternative access to the ROW is available, remove equipment bridges as soon as practical after final cleanup.

### *5.2.3 Clearing and Grading*

1. Confine construction activities and ground disturbance to within the ROW boundaries shown on the construction drawings.

2. Restrict extra work areas (such as staging areas and additional spoil storage areas) to those shown only on the construction drawings. All extra work areas must be located at least 50 feet away from the water's edge, except where the adjacent upland consists of actively cultivated or rotated cropland or other disturbed land. If site-specific conditions do not permit a 50-foot setback, the Company can receive written approval from the FERC to locate these extra work areas closer than 50 feet from the water's edge.

3. If the pipeline parallels a waterbody, attempt to maintain at least 15 feet of undisturbed vegetation between the waterbody (and any adjacent wetland) and the ROW except at the crossing location.

4. Clear the ROW adjacent to all waterbodies *up to the high water bank* (where discernible).

5. Immediately remove all cut trees and branches that inadvertently fall into a waterbody and stockpile in an upland area on ROW for disposal.

6. Grade the ROW adjacent to waterbodies *up to within 10 feet of the high water bank*, leaving an ungrubbed vegetative strip intact.

7. Clearing and grading operations may proceed through the 10-foot vegetative strip **only on the working side of the ROW** in order to install the equipment bridge and travel lane. Use temporary sediment barriers to prevent the flow of bank spoil into the waterbody.

8. Maintain adequate flow rates to protect aquatic life and prevent the interruption of existing downstream uses.

### *5.2.4 Installing Temporary Erosion and Sediment Control*

1. Install sediment barriers immediately after initial disturbance of the waterbody or adjacent upland. Sediment barriers must be properly maintained throughout construction and reinstalled as necessary (such as after backfilling of the trench), until replacement by permanent erosion controls or restoration of adjacent upland areas is complete.

2. Install sediment barriers across the entire construction ROW at all waterbody crossings, where necessary to prevent the flow of sediments into the waterbody. Temporary or removable sediment barriers such as interceptor dikes or drivable berms as described in Section 3.5.4 may be used in lieu of sediment barriers in front of equipment bridges or timber mats across the travel lane. These temporary sediment barriers can be removed during the construction day, but must be reinstalled after construction has stopped for the day and/or when heavy precipitation is imminent.

3. Install sediment barriers as necessary along the edge of the construction ROW to contain spoil and sediment within the ROW where waterbodies are adjacent or parallel to the construction ROW.

4. Use trench plugs at all waterbody crossings to prevent diversion of water into upland portions of the pipeline trench and to keep any accumulated trench water out of the waterbody. Trench plugs shall be of sufficient size to withstand upslope water pressure.

### *5.2.5 Various Types of Crossings*

Construction at waterbodies will be conducted using two principal crossing methods, a "dry" crossing and a "wet" crossing. The "dry" crossing procedure is further divided into a flumed crossing and a dam and pump crossing. These methods are designed to maintain downstream flow at all times and to isolate the construction zone from the stream flow by channeling the water flow through a flume pipe or by damming the flow and pumping the water around the construction area. The overall objective is to minimize siltation of the waterbody and to facilitate trench excavation of saturated spoil. Unless approved otherwise by the appropriate state agency, pipeline construction and installation must occur using one of the two "dry" crossing methods for waterbodies state-designated as either coldwater or significant coolwater or warmwater fisheries. The flumed and dam and pump crossing methods are applicable to waterbodies up to 30 feet wide at the water's edge at the time of construction. The two "dry" crossings are further described below in Sections 5.2.5.2 and 5.2.5.3.

The "wet" crossing procedure involves open cutting the waterbody without isolating the construction zone from the stream flow. The objective of this method is to complete the waterbody crossing as quickly as practical in order to minimize the duration of impacts to aquatic resources. All streams, their classifications, timing windows, and crossing procedures will be identified in the Clearance Package/Permit Book and on the construction drawings. Table 6-1 outlines the general procedures to be followed at all waterbody crossings.

#### *5.2.5.1 General Crossing Procedures*

1. Dewater trench in accordance with the procedures described in Section 3.5.6.

2. For minor waterbodies:

   a. Place all spoil from the waterbody within the construction ROW at least 10 feet from the water's edge or in the extra work areas shown on the construction drawings. Use sediment barriers to prevent flow of spoil or heavily silt-laden water into the waterbody.

3. For intermediate waterbodies:

   a. Less than 30 feet in width, place all spoil from the waterbody within the construction ROW at least 10 feet from the water's edge or in the extra work areas shown on the construction drawings. Use sediment barriers to prevent flow of spoil or heavily silt-laden water into the waterbody.

b. Greater than 30 feet in width, spoil may be temporarily sidecast into the waterbody provided that site specific approval is received from the appropriate permitting agency.

4. For major waterbodies:

   a. Place all upland bank spoil from the waterbody within the construction ROW at least 10 feet from the water's edge or in the extra work areas shown on the construction drawings. Use sediment barriers to prevent flow of spoil or heavily silt laden water into the waterbody.

   b. Sidecasting is permitted in major waterbodies upon approval from the appropriate permitting agencies.

5. Restore and stabilize the banks and channel in accordance with Section 5.2.6.

#### ***5.2.5.2 Flumed Crossing***

The flumed crossing method utilizes a flume pipe(s) to transport stream flow across the disturbed area and allows trenching to be done in drier conditions (Figure 30). The flume pipe(s) installed across the trench will be sized to accommodate anticipated stream flows. This method is utilized for perennial waterbodies (minor and intermediate) up to 30 feet wide that are state designated fisheries including coldwater fisheries and warmwater fisheries considered significant by the state. Flumes are generally not recommended for use on a watercourse with a broad unconfined channel, unstable banks, a permeable substrate, excessive stream flow, or where the installation and construction of the flume crossing will adversely affect the bed or banks of the stream.

1. Cross all minor waterbodies that are state-designated fisheries, as identified in the Clearance Package/ Permit Book, using a dry crossing technique (Figures 30, 31).

2. All construction equipment must cross state-designated fisheries on an equipment bridge as specified in Section 5.2.2.

4. The flumed crossing shall be installed as follows:

   a. Install flume pipe(s) after blasting and other rock breaking measures (if required), but before trenching;

   b. Properly align flume pipe(s) to prevent bank erosion and streambed scour;

   c. Use sand bags or equivalent dam diversion structure to provide a seal at either end of the flume to channel water flow (some modifications to the stream bottom may be required to achieve an effective seal);

   d. **Do not remove flume pipe** during trenching, pipe laying (thread pipe underneath the flume pipe(s)), or backfilling activities, or initial streambed restoration efforts unless authorized by agency permits; and

   e. Remove all flume pipes and dams that are not also part of the equipment bridge as soon as final cleanup of the stream bed and bank is complete.

#### ***5.2.5.3 Dam and Pump Crossing***

The dam and pump method is presented as an alternative dry crossing procedure to the flumed crossing. The dam and pump crossing is accomplished by utilizing pumps to transport stream flow across the disturbed area (Figure 31). This method involves placing sandbags across the existing stream channel upstream from the proposed crossing to stop water flow and downstream from the crossing to isolate the work area. Pumps are used to pump the water across the disturbed area and back into the stream further downstream. This method is intended for use at perennial waterbodies (minor and intermediate) up to 30 feet wide and state designated fisheries including coldwater fisheries and warmwater fisheries considered significant by the state. The dam and pump procedure allows for more space and flexibility during trenching and pipe installation, which shortens the duration of time spent at the waterbody.

1. The dam and pump method may be used for crossings of waterbodies where pumps can adequately transfer stream flow volumes around the work area, and where there are no concerns about sensitive species passage.

2. Implementation of the dam and pump crossing method will meet the following performance criteria:

    a. Use sufficient pumps, including onsite backup pumps, to maintain downstream flows;

    b. Construct dams with materials that prevent sediment and other pollutants from entering the waterbody (e.g., sandbags or clean gravel with plastic liner);

    c. Screen pump intakes

    d. Prevent streambed scour at pump discharge; and

    e. Monitor the dam and pumps to ensure proper operation throughout the waterbody crossing.

3. The dam and pump crossing shall be installed as follows:

    a. Install and properly seal sandbags at the upstream and downstream location of the crossing;

    b. Create an in-stream sump using sandbags if a natural sump is unavailable for the intake hose;

    c. Initiate pumping of the stream around the work area prior to excavating the trench;

    d. Screen all intake hoses to prevent the entrainment of fish and other aquatic life;

    e. Direct all discharges from the pumps through energy dissipaters to minimize scour and siltation;

    f. Monitor pumps <u>at all times</u> until construction of the crossing is completed; and

    g. Following construction, remove the equipment crossing and sandbag dams.

#### ***5.2.5.4 Wet Crossing***

This construction technique is typically used to cross waterbodies that are non state-designated as well as intermediate and major waterbodies with substantial flows that cannot be effectively culverted or pumped around the construction zone using the dry crossing techniques (Figure 32). Non-state designated waterbodies include perennial warmwater streams not considered significant by the state, intermittent drainage ditches, and intermittent streams.

The wet-ditch crossing shall be installed as follows:

1. For minor waterbodies:

    a. Equipment bridges are not required at non state-designated fisheries (e.g. agricultural or intermittent drainage ditches). However, if an equipment bridge is used, it must be constructed in accordance with Section 5.2.2;

    b. Limit use of equipment operating in the waterbody to that needed to construct the crossing;

    c. Complete trenching and backfilling in the waterbody (not including blasting and other rock breaking measures) within 24 continuous hours; and

    d. If a flume is installed within the waterbody during mainline activities, it can be removed just prior to lowering in the pipeline. The 24-hour timeframe starts as soon as the flume is removed.

2. For intermediate waterbodies:

    a. Limit use of equipment operating in the waterbody to that needed to construct the crossing. All other construction equipment must cross on an equipment bridge as specified in Section 5.2.2; and

    b. Attempt to complete trenching and backfill work within the waterbody (not including blasting and other rock breaking measures) within 48 continuous hours, unless site-specific conditions make completion within 48 hours infeasible.

3. For major waterbodies:

    a. Company will develop site-specific crossing plans to be submitted for approval by the FERC and the appropriate permitting agency; and

    b. Construct the crossing in accordance with the measures contained in this Plan to the maximum extent practical.

### *5.2.6 Restoration*

1. Return all waterbody banks to preconstruction contours or to stable angle of repose as approved by the EI.

2. Use clean gravel or native cobbles for the upper 12 inches of trench backfill in all waterbodies identified in the Clearance Package/Permit Book as coldwater fisheries.

3. For wet crossings, stabilize waterbody banks and install temporary sediment barriers within 24 hours of completing the crossing. For dry crossings, complete bank stabilization before returning flow to the waterbody channel.

4. Limit the placement of riprap to the slopes along the disturbed waterbody crossing.

5. Install erosion control fabric along waterbodies with low flow conditions (Figure 33).

6. Revegetate disturbed riparian areas with conservation grasses and legumes in accordance with the recommended Upland Seed Mix in Appendix B. In the event that final cleanup is deferred more than 20 days after the trench is backfilled, all slopes within 100 feet of waterbodies shall be mulched with 3 tons/acre of straw.

7. Remove all temporary sediment barriers when replaced by permanent erosion controls or when restoration of adjacent upland areas is successful as specified in Section 8.1.

8. Install a permanent interceptor dike and a trench plug at the base of slopes near each waterbody crossed. Locate the trench plug immediately upslope of the interceptor dike. Permanent interceptor dikes may not be installed in agricultural areas.

**Table 5-1: General Waterbody Crossing Procedures**

| WATERBODY CROSSING ACTIVITIES | WATERBODY TYPE | | | | | |
|---|---|---|---|---|---|---|
| | MINOR | | INTERMEDIATE | | MAJOR | |
| | Non-State[1] Designated | State[2] Designated | Non-State[3] Designated | State[2] Designated | Non-State[3] Designated | State[2] Designated |
| Flumed Crossing (Dry) *Section 5.2.5.2, Figure 30* | | X | | X | | |
| Dam and Pump Crossing (Dry) *Section 5.2.5.3, Figure 31* | | X | | X | | |
| Wet Crossing *Section 5.2.5.4, Figure 32* | X | | X | X | X | X |
| Construction timing window during the year *Section 5.2.1* | | X | | X | | X |
| Time to complete construction of crossing (not including blasting) [4] | 24 Hours | | 48 Hours | | | |
| Equipment bridge required [5] | | X | X | X | X | X |

[1] Includes agricultural intermittent drainage ditches, intermittent streams, and perennial warmwater streams not considered significant by the state.

[2] Includes all perennial waterbodies that support coldwater fisheries and warmwater fisheries considered significant by the state.

[3] Includes perennial warmwater streams not considered significant by the state.

[4] If a flume is installed within the waterbody during mainline activities, it can be removed just prior to lowering in the pipeline. The 24-hour timeframe starts as soon as the flume is removed.

[5] An equipment bridge may not be required for a waterbody being crossed by a horizontal directional drill.

# 6. WETLAND CROSSINGS

## 6.1 Definition

The term "**Wetland**" as used in this Plan includes any area that satisfies the requirements of the current Federal methodology for identifying and delineating wetlands. Wetland areas have been delineated prior to construction and are identified on the construction drawings.

The wetland crossing procedures described in this Plan comply with the Section 404 Nationwide permit program terms and conditions (33 CFR Part 330). The requirements outlined below do not apply to wetlands in actively cultivated or rotated cropland. Standard upland protective measures including workspace and topsoiling requirements, will apply to these agricultural wetlands.

## 6.2 General Procedures

### *6.2.1 Clearing and Grading*

1. Limit construction activity and ground disturbance in wetland areas to a construction ROW width of 75 feet or as shown on the construction drawings. With written approval from the FERC for site-specific conditions, construction ROW width within the boundaries of federally delineated wetlands may be expanded beyond 75 feet.

2. Wetland boundaries and buffers must be clearly marked in the field with signs and /or highly visible flagging until construction-related ground disturbing activities are complete.

3. Restrict extra work areas (such as staging areas and additional spoil storage areas) to those shown only on the construction drawings. All extra work areas must be located at least 50 feet away from wetland boundaries, except where the adjacent upland consists of actively cultivated or rotated cropland or other disturbed land. If site-specific conditions do not permit a 50-foot setback, the Company can receive written approval from the FERC to locate these extra work areas closer than 50 feet from the wetland.

4. Aboveground facilities shall not be located in any wetland, except as permitted or where the location of such facilities outside of wetlands would prohibit compliance with DOT regulations.

5. If standing water or saturated soils are present, or if construction equipment causes ruts or mixing of the topsoil and subsoil in wetlands, use low-ground-weight construction equipment or operate normal equipment on timber riprap, prefabricated equipment mats or terra mats on the working side of the ROW during clearing operations. Do not use more than two layers of timber riprap to stabilize the ROW.

6. Cut vegetation just above ground level and grind stumps to ground level, leaving existing root systems in place. Immediately remove all cut trees and branches from the wetland and stockpile in an upland area on ROW for disposal.

7. Limit pulling of tree stumps and grading activities to directly over the trenchline. Do not grade or remove stumps or root systems from the rest of the ROW in wetlands unless the Chief Inspector and EI determine that safety-related construction constraints require removal of tree stumps from under the working side of the ROW.

8. Do not cut trees outside of the construction ROW to obtain timber for riprap or equipment mats.

9. Cleared materials (slash, logs, brush, wood chips) shall not be permanently placed within wetland areas.

### *6.2.2 Temporary Erosion and Sediment Control*

1. Install sediment barriers immediately after initial ground disturbance at the following locations:
   a. Within the ROW at the edge of the boundary between wetland and upland;
   b. Across the entire ROW immediately upslope of the wetland boundary to prevent sediment flow into the wetland;
   c. Along the edge of the ROW, where the ROW slopes toward the wetland, to protect adjacent, off ROW wetland; and
   d. Along the edge of the ROW as necessary to contain spoil and sediment within the ROW through wetlands.

2. Maintain all sediment barriers throughout construction and reinstall as necessary (such as after backfilling of the trench) until replaced by permanent erosion controls or restoration of adjacent upland areas is complete in accordance with Section 8.1.

### *6.2.3 Crossing Procedure*

1. Minimize the length of time that topsoil is segregated and the trench is open.

2. Do not use rock, soil imported from outside the wetland, tree stumps, or brush riprap to stabilize the ROW.

3. Perform topsoil segregation in accordance with Section 3.5.3.1 and trench dewatering in accordance with Section 3.5.6.

4. Assemble the pipeline in an upland area unless the wetland is dry enough to adequately support skids and pipe.

5. Use “push pull” or “float” techniques to place the pipe in the trench where water and other site conditions allow.

6. Install trench plugs and/or seal the trench bottom as necessary to maintain the original wetland hydrology at locations where the pipeline trench may drain a wetland.

7. Install a permanent interceptor dike and a trench plug at the base of slopes near the boundary between the wetland and adjacent upland areas. In addition, install sediment barriers as outlined in Section 3.5.2. Permanent interceptor dikes shall not be installed in agricultural areas.

8. Restore segregated topsoil to its original position after backfilling is complete. When required, additional fill material imported from off the ROW must be approved by the EI. The original wetland contours and flow regimes will be restored to the extent practical.

### *6.2.4 Cleanup and Restoration*

1. Revegetate the ROW with annual ryegrass at 40 lbs/acre PLS or with the recommended Wetland Seed Mix in Appendix B, unless standing water is present.

2. **Do not use lime or fertilizer in wetland areas.**

3. Mulch the disturbed ROW only when required by the appropriate land management or state agency, as identified in the Clearance Package/Permit Book.

4. In the event that final cleanup is deferred more than 20 days after the trench is backfilled, all slopes adjacent to wetlands shall be mulched with 3 tons/acre of straw for a minimum of 100 feet on each side of the crossing.

5. Remove all timber riprap and prefabricated equipment mats upon completion of construction.

6. Develop specific procedures in coordination with the appropriate land management or state agency, where necessary, to prevent the invasion or spread of undesirable exotic vegetation (such as purple loose strife and phragmites).

7. Ensure that all disturbed areas permanently revegetate in accordance with Section 8.1.

8. Remove temporary sediment barriers located at the boundary between wetland and adjacent upland areas after upland revegetation and stabilization of adjacent upland areas are successful as specified in Section 8.1.

# 7. SPILL PREVENTION CONTROL

**7.1** The Contractor shall adhere to the Company's SPCC Plan (see Appendix C) at all times.

1. Do not store hazardous materials, chemicals, fuels, or lubricating oils within 100 feet of any wetland, waterbody or within any designated municipal watershed area where feasible. If the 100-foot setback cannot be met, this activity can be performed within the 100-foot setback, with EI approval, if done in accordance with the SPCC Plan.

2. Refuel all construction equipment at least 100 feet from any wetland or waterbody, where feasible. If the 100-foot setback cannot be met, this activity can be performed within the 100-foot setback, with EI approval, if done in accordance with the SPCC Plan.

3. Do not perform fondu or concrete coating activities within 100 feet of any wetland or waterbody. If the 100-foot setback cannot be met, these activities can be performed within the 100-foot setback, with EI approval, if done in accordance with the SPCC Plan.

# 8. POST CONSTRUCTION ACTIVITIES

## 8.1 Post-Construction Monitoring

All projects conducted under this Plan, with the exception of insitu pipe replacements (i.e. DOT-mandated replacements, line lowerings, and anomaly repairs), shall meet the monitoring requirements set forth in this section. Company personnel shall perform the following:

1. Establish and implement a program to monitor the success of restoration upon completion of construction and restoration activities;

2. Conduct follow-up inspections of all disturbed upland areas after the first growing season and if necessary, the second growing season (normally 3 to 9 months and 15 to 21 months after seeding, respectively) to determine the success of revegetation;

3. Revegetation in non agricultural areas shall be considered successful if the vegetative cover is sufficient to prevent the erosion of soils on the disturbed ROW and density and cover are similar to that in adjacent undisturbed area. Sufficient coverage in upland areas is defined when vegetation has a uniform 70 percent vegetative coverage. In agricultural areas, revegetation shall be considered successful if crop yields are similar to adjacent undisturbed portions of the same field. Revegetation efforts (such as fertilizing or reseeding) will continue until revegetation is successful;

4. Restoration shall be considered successful if the ROW surface condition is similar to adjacent undisturbed lands, construction debris is removed (unless requested otherwise by the land owner or land managing agency), revegetation is successful, and proper drainage has been restored;

5. Monitor and correct problems with drainage and irrigation systems resulting from pipeline construction in active agricultural areas until restoration is successful;

6. Make efforts to control unauthorized off-road vehicle use, in cooperation with the landowner, throughout the life of the project. Maintain signs, gates, and vehicle trails as necessary;

7. Monitor and record the success of wetland revegetation annually for the <u>first 3 years</u> (or as required by permit) after construction, or longer, until wetland revegetation is successful. Wetland revegetation will be considered successful when the cover of herbaceous and/or woody species is at least 80 percent of the type, density, and distribution of the vegetation in adjacent wetland areas that were not disturbed by construction. If revegetation is not successful at the end of 3 years, the Company shall develop and implement (in consultation with a professional wetland ecologist) a plan to actively revegetate the wetland with native wetland herbaceous and woody plant species; and

8. Inspect all temporary remaining erosion and sedimentation controls during routine patrols to ensure proper functioning. Any deficiencies found will be reported and corrected as needed. Once the area has revegetated and stabilized, the erosion controls will be removed.

## 8.2 Post-Construction Maintenance

All projects conducted under this Plan, with the exception of insitu pipe replacements (i.e. DOT-mandated replacements, line lowerings, and anomaly repairs), shall meet the maintenance requirements set forth in this section. The following requirements restrict the amount of vegetation maintenance that can occur on new pipeline facilities. Where the newly established pipeline ROW is located on other existing ROWs not affiliated with the Company, the easement holder or owner will continue to maintain their ROWs using procedures specified in their vegetative management programs.

### *8.2.1 Uplands*

Routine maintenance of the ROW is required to allow continued access for routine pipeline patrols, maintaining access in the event of emergency repairs, and visibility during aerial patrols. In upland areas, maintenance of the ROW will involve clearing the entire ROW of woody vegetation.

1. Routine vegetation maintenance clearing shall be conducted no more frequently than once every 3 years. However, to facilitate periodic corrosion and leak surveys, a 10-foot wide corridor centered on the pipeline may be maintained annually in a herbaceous state.

2. In no case shall routine vegetation maintenance clearing occur between April 15 and August 1 of any year.

### *8.2.2 Waterbodies and Wetlands*

1. Vegetation maintenance practices on the construction ROW adjacent to waterbodies will consist of maintaining a riparian strip that measures 25 feet back from the mean high water mark. This riparian area will be allowed to permanently revegetate with native plant species across the entire ROW.

2. Vegetation maintenance practices over the full width of the construction ROW in wetlands is prohibited.

3. To facilitate periodic corrosion and leak surveys at wetlands and waterbodies, a 10-foot wide corridor centered on the pipeline may be maintained in an herbaceous state. Trees and shrubs greater than 15 feet in height that are located within 15 feet of the pipeline may be cut and removed from the ROW.

4. Herbicides or pesticides shall not be used in or within 100 feet of a wetland or waterbody, except as specified by the appropriate land management or state agency.

## 8.3 Reporting

The Company shall maintain records that identify by milepost:

1. Method of application, application rate, and type of fertilizer, pH modifying agent, seed, and mulch used;
2. Acreage treated;
3. Dates of backfilling and seeding; and
4. Names of landowners requesting special seeding treatment and a description of the follow-up actions.

For the FERC-certificated projects, the Company will file quarterly activity reports documenting problems, including those identified by the landowner, and corrective actions taken for at least 2 years following construction.

A wetland revegetation monitoring report identifying the status of the wetland revegetation efforts will be filed at the end of 3 years following construction, and annually thereafter until revegetation is successful.

# APPENDIX A

# FIGURES

| FIGURE NUMBER | STANDARD NUMBER | DRAWING TITLE |
|---|---|---|
| FIGURE #1 | ES-0001 | TYPICAL CONSTRUCTION WIDTHS ACQUIRING NEW PERMANENT RIGHT-OF-WAY |
| FIGURE #2 | ES-0002 | TYPICAL CONSTRUCTION WIDTHS NOT ACQUIRING NEW PERMANENT RIGHT-OF-WAY (MULTIPLE LINE SYSTEM) |
| FIGURE #3 | ES-0003 | TYPICAL CONSTRUCTION WIDTHS NOT ACQUIRING NEW PERMANENT RIGHT-OF-WAY (SINGLE LINE SYSTEM) |
| FIGURE #4 | ES-0004 | ACCESS ROAD CROSS SECTION |
| FIGURE #5 | ES-0005 | ROCK ACCESS PAD INSTALLATION AND MAINTENANCE |
| FIGURE #6 | ES-0006 | TYPICAL TEMPORARY ACCESS ROAD THROUGH WETLANDS |
| FIGURE #7 | ES-0007 | SILT FENCE INSTALLATION AND MAINTENANCE |
| FIGURE #8 | ES-0008 | STRAW BALE INSTALLATION AND MAINTENANCE |
| FIGURE #9 | ES-0009 | STRAW BALE INSTALLATION FOR A CHECK DAM IN A DRAINAGE WAY |
| FIGURE #10 | ES-0010 | STORM DRAIN INLET PROTECTION |
| FIGURE #11 | ES-0011 | ROW TOPSOIL SEGREGATION TECHNIQUES |
| FIGURE #12 | ES-0012 | INTERCEPTOR DIKE INSTALLATION AND MAINTENANCE |
| FIGURE #13 | ES-0013 | TYPICAL TRENCH DETAIL |
| FIGURE #14 | ES-0014 | TEMPORARY TRENCH PLUGS |
| FIGURE #15 | ES-0015 | FILTER BAG |
| FIGURE #16 | ES-0016 | PERMANENT TRENCH PLUGS |
| FIGURE #17 | ES-0017 | TRENCH PLUG DETAIL |
| FIGURE #18 | ES-0018 | DEWATERING STRUCTURE FOR HYDROSTATIC TESTING |
| FIGURE #19 | ES-0019 | ALTERNATE DEWATERING STRUCTURE FOR HYDROSTATIC TESTING |
| FIGURE #20 | ES-0020 | CHEVRON INTERCEPTOR DIKE INSTALLATION AND MAINTENANCE |
| FIGURE #21 | ES-0021 | ROCK LINED DRAINAGE SWALE INSTALLATION AND MAINTENANCE |
| FIGURE #22 | ES-0022 | TYPICAL MATTING ON SLOPES |
| FIGURE #23 | ES-0023 | EROSION CONTROL FABRIC INSTALLATION |
| FIGURE #24 | ES-0024 | DRAIN TILE REPAIR PROCEDURE |
| FIGURE #25 | ES-0025 | TYPICAL PAVED ROAD CROSSING CONTROL MEASURES (OPEN CUT) |
| FIGURE #26 | ES-0026 | TYPICAL PAVED ROAD CROSSING CONTROL MEASURES (BORED) |
| FIGURE #27 | ES-0027 | TEMPORARY EQUIPMENT BRIDGE (EQUIPMENT PADS AND CULVERTS) |
| FIGURE #28 | ES-0028 | TEMPORARY EQUIPMENT BRIDGE (CRUSHED STONE AND CULVERTS) |
| FIGURE #29 | ES-0029 | TEMPORARY EQUIPMENT BRIDGE (FLEX-FLOAT OR PORTABLE) |
| FIGURE #30 | ES-0030 | TYPICAL FLUMED CROSSING |
| FIGURE #31 | ES-0031 | TYPICAL DAM AND PUMP CROSSING |
| FIGURE #32 | ES-0032 | TYPICAL WET CROSSING |
| FIGURE #33 | ES-0033 | TYPICAL MATTING OF STREAMBANKS |

I.G. ESE0000.DGN

TCSmith 17 MAY 2001

INDEX OF FIGURES

APPENDIX A

DWG. ES-0000 REV.

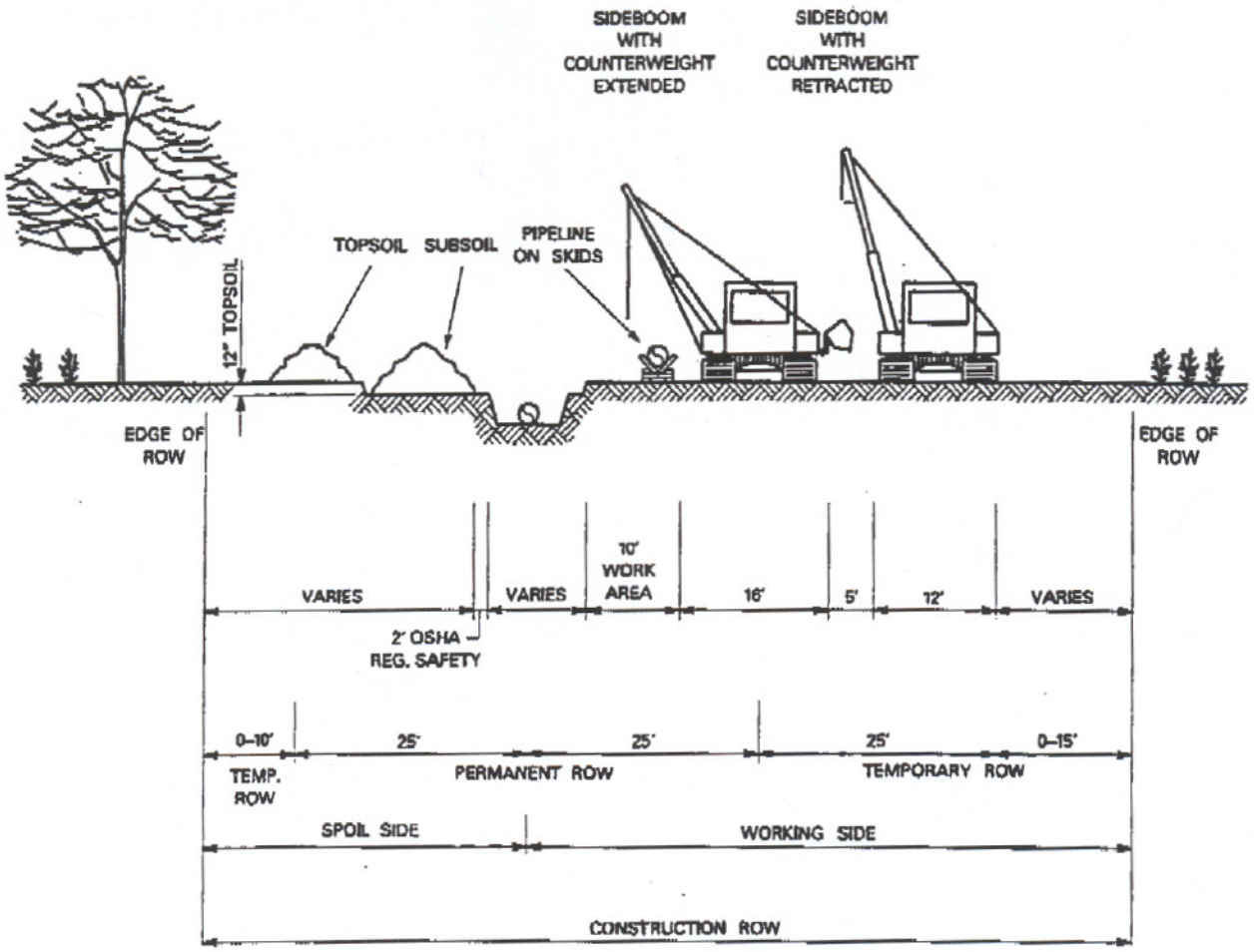


| PIPE DIAMETER | SPOIL SIDE (FT.) | WORKING SIDE (FT.) | CONSTRUCTION ROW (FT.) |
|---|---|---|---|
| 12" OR LESS | 25 | 50 | 75 |
| 14"–30" | 35 | 50 | 85 |
| 36"–42" | 35 | 65 | 100 |
| WETLANDS | 25 | 50 | 75 |

NOTES:

1. ALTHOUGH THE DIMENSIONS SHOWN ARE TYPICAL, SOME VARIATIONS MAY EXIST DUE TO SITE SPECIFIC CONDITIONS. UNLESS OTHERWISE INDICATED ON THE ALIGNMENT SHEETS, THE MAXIMUM WIDTH OF THE CONSTRUCTION RIGHT-OF-WAY SHALL BE AS SHOWN IN THE TABLE FOR THE APPROPRIATE PIPE DIAMETER.

2. TOPSOIL AND SUBSOIL SHALL BE SEGREGATED WITHIN WETLAND, RESIDENTIAL, AGRICULTURAL (EXCEPT PASTURES), HAYFIELDS, AND OTHER AREAS AT LANDOWNER'S REQUEST.

TC Smith 17 MAY 2001

I.G. ESE0001.DGN

TYPICAL CONSTRUCTION WIDTHS ACQUIRING NEW PERMANENT RIGHT-OF-WAY

FIGURE #1

DWG. ES–0001 REV.

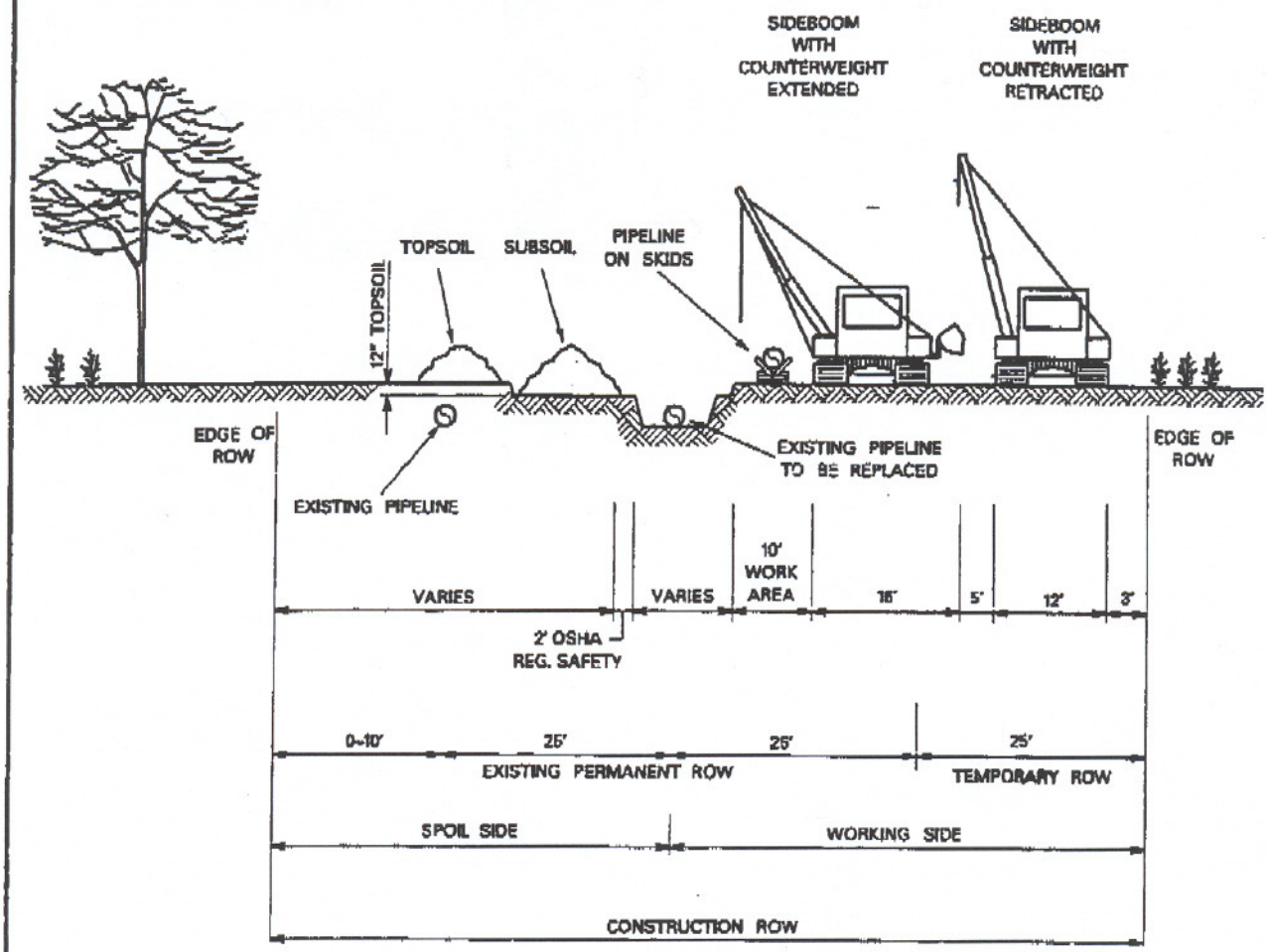


| PIPE DIAMETER | SPOIL SIDE (FT.) | WORKING SIDE (FT.) | CONSTRUCTION ROW (FT.) |
|---|---|---|---|
| 12" OR LESS | 25 | 50 | 75 |
| 14"-30" | 35 | 50 | 85 |
| 36"-42" | 35 | 50 | 85 |
| WETLANDS | 25 | 50 | 75 |

NOTES:

1. ALTHOUGH THE DIMENSIONS SHOWN ARE TYPICAL, SOME VARIATIONS MAY EXIST DUE TO SITE SPECIFIC CONDITIONS. UNLESS OTHERWISE INDICATED ON THE ALIGNMENT SHEETS, THE MAXIMUM WIDTH OF THE CONSTRUCTION RIGHT-OF-WAY SHALL BE AS SHOWN IN THE TABLE FOR THE APPROPRIATE PIPE DIAMETER.
2. TOPSOIL AND SUBSOIL SHALL BE SEGREGATED WITHIN WETLAND, RESIDENTIAL, AGRICULTURAL (EXCEPT PASTURES), HAYFIELDS, AND OTHER AREAS AT LANDOWNER'S REQUEST.
3. IF THE WORKING SIDE MUST BE GREATER THAN 50 FEET (i.e. TEMPORARY WORKSPACE IS GREATER THAN 25 FEET), COMPANY MUST REQUEST APPROVAL FROM THE FERC.

TCSmith 17 MAY 2001

I.G. ESE0002.DGN

TYPICAL CONSTRUCTION WIDTHS NOT ACQUIRING NEW PERMANENT RIGHT-OF-WAY (MULTIPLE LINE SYSTEM)

FIGURE #2

DWG. ES-0002 REV.

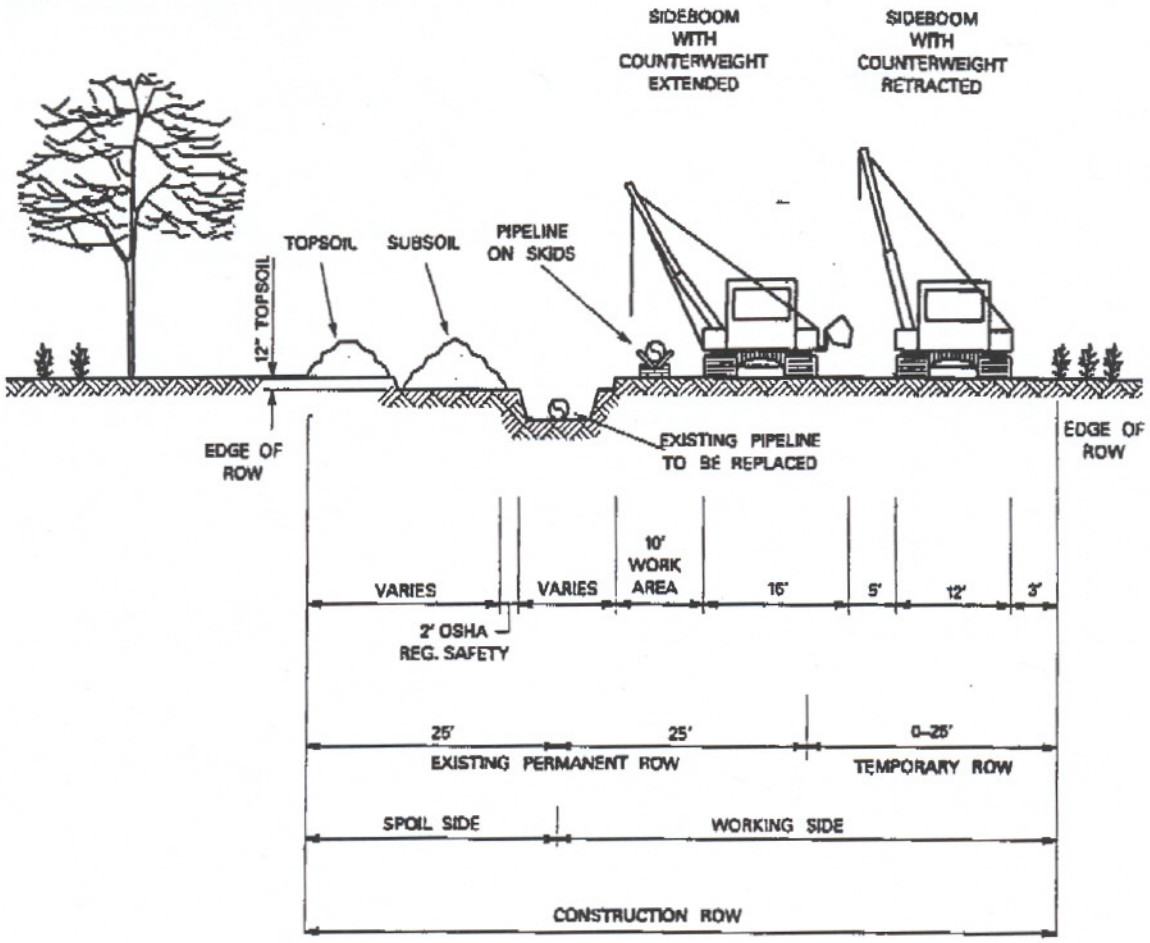


| PIPE DIAMETER | SPOIL SIDE (FT.) | WORKING SIDE (FT.) | CONSTRUCTION ROW (FT.) |
|---|---|---|---|
| 12" OR LESS | 25 | 25 | 50 |
| 14"-30" | 25 | 50 | 75 |
| 36"-42" | 25 | 50 | 75 |
| WETLANDS | 25 | 50 | 75 |

NOTES:

1. ALTHOUGH THE DIMENSIONS SHOWN ARE TYPICAL, SOME VARIATIONS MAY EXIST DUE TO SITE SPECIFIC CONDITIONS. UNLESS OTHERWISE INDICATED ON THE ALIGNMENT SHEETS, THE MAXIMUM WIDTH OF THE CONSTRUCTION RIGHT-OF-WAY SHALL BE AS SHOWN IN THE TABLE FOR THE APPROPRIATE PIPE DIAMETER.
2. TOPSOIL AND SUBSOIL SHALL BE SEGREGATED WITHIN WETLAND, RESIDENTIAL, AGRICULTURAL (EXCEPT PASTURES), HAYFIELDS, AND OTHER AREAS AT LANDOWNER'S REQUEST.
3. IF THE WORKING SIDE MUST BE GREATER THAN THE VALUES SHOWN IN THE TABLE, COMPANY MUST REQUEST APPROVAL FROM THE FERC.

TS Smith 17 MAY 2001

I.D. ESE0003.DGN

| | | |
|---|---|---|
| | TYPICAL CONSTRUCTION WIDTHS NOT ACQUIRING NEW PERMANENT RIGHT-OF-WAY (SINGLE LINE SYSTEM) | FIGURE #3<br>DWG. ES-0003 REV. |

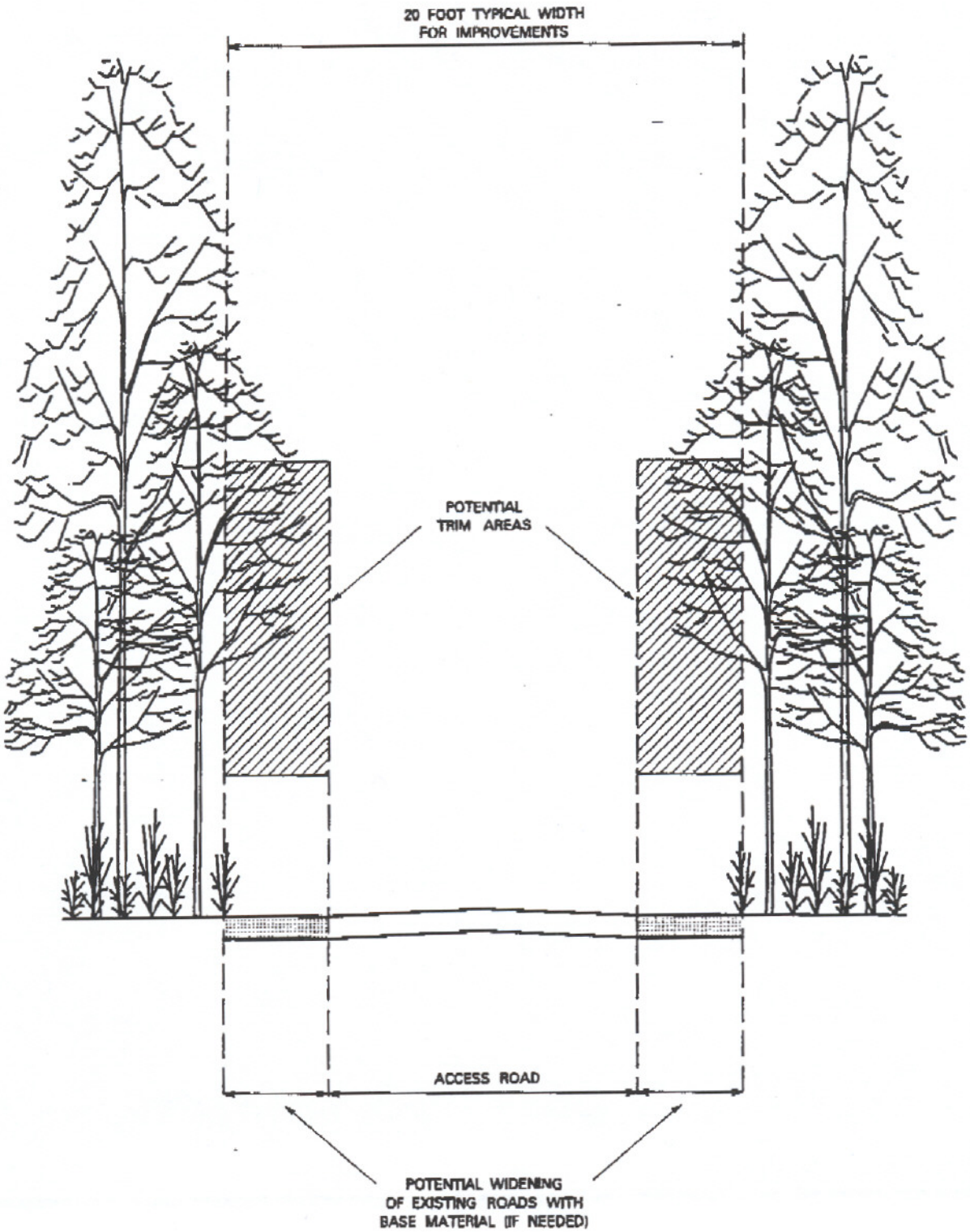


| | | |
|---|---|---|
| | ACCESS ROAD CROSS SECTION | FIGURE #4 |
| | | DWG. ES-0004 REV. |

I.C. ESE0004.DGN TCSmith 17 MAY 2001

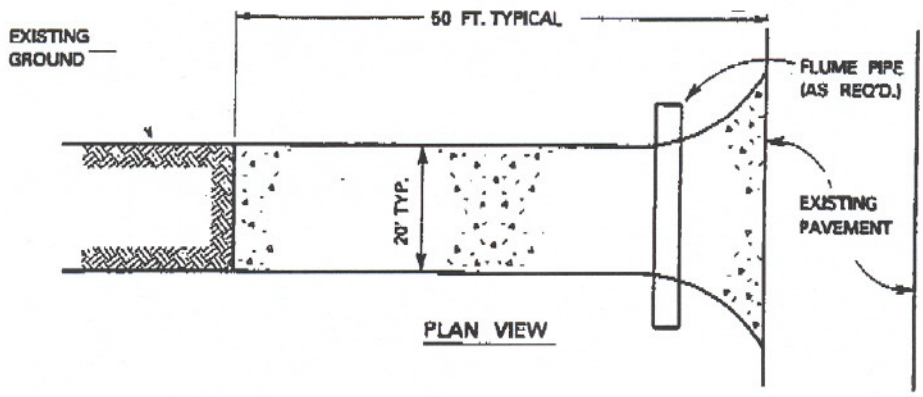


PLAN VIEW

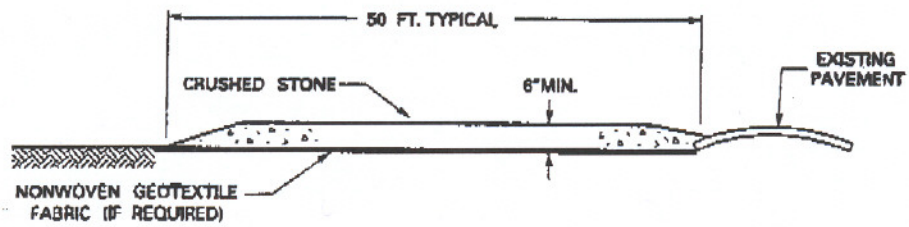


CROSS-SECTION

CONSTRUCTION SPECIFICATIONS:

1. STONE SIZE = 4" - 6" (AVG.) CRUSHED STONE
2. ALL STONE MUST BE PLACED ON NON-WOVEN GEOTEXILE FABRIC IF USED IN RESIDENTIAL OR ACTIVE AGRICULTURAL AREAS.
3. LENGTH = FIFTY (50) FOOT TYPICAL (IF SITE CONDITIONS ALLOW)
4. WIDTH = TWENTY (20) FOOT TYPICAL
5. THICKNESS = SIX (6) INCHES MINIMUM.
6. ALL SURFACE WATER FLOWING OR DIVERTED TOWARD CONSTRUCTION ENTRANCES SHALL BE PIPED ACROSS THE ENTRANCE. IF PIPING IS IMPRACTICAL, A DRIVEABLE BERM OR OTHER TEMPORARY EROSION CONTROL DEVICE CAN BE USED.
7. THE ENTRANCE SHALL BE PERIODICALLY INSPECTED AND MAINTAINED IN A CONDITION THAT MINIMIZES TRACKING OR FLOWING OF SEDIMENT ONTO PUBLIC RIGHTS-OF-WAY. MAINTENANCE MAY INCLUDE PERIODIC TOP DRESSING WITH ADDITIONAL STONE OR THE REPAIR / CLEANOUT OF ANY MEASURES USED TO TRAP SEDIMENT. ANY SEDIMENT THAT IS SPILLED, DROPPED, WASHED OR TRACKED ONTO PUBLIC RIGHTS-OF-WAY MUST BE REMOVED AS SOON AS PRACTICAL.

I.G.ESE0005.DGN IFSmith 17 MAY 2001

| | | |
|---|---|---|
| ROCK ACCESS PAD INSTALLATION AND MAINTENANCE | FIGURE #5 | |
| | DWG. ES-0005 | REV. |

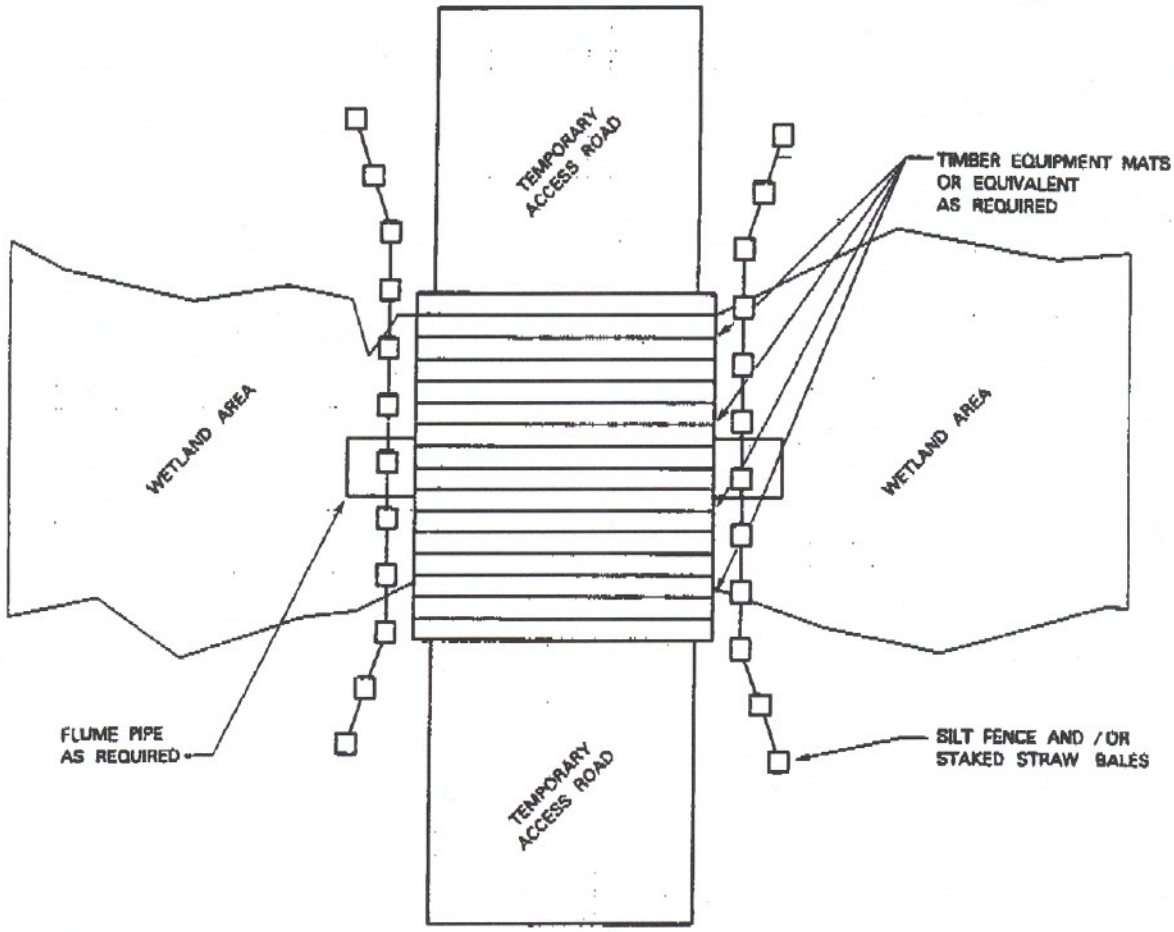


PLAN VIEW
N.T.S.

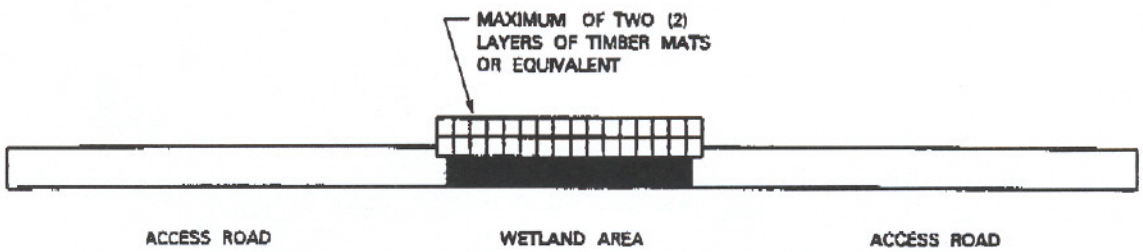


CROSS SECTION
N.T.S.

TESmith 17 MAY 2001

LG. ESE0006.DGN

TYPICAL TEMPORARY ACCESS ROAD THROUGH WETLANDS

FIGURE #6

DWG. ES–0006 REV.

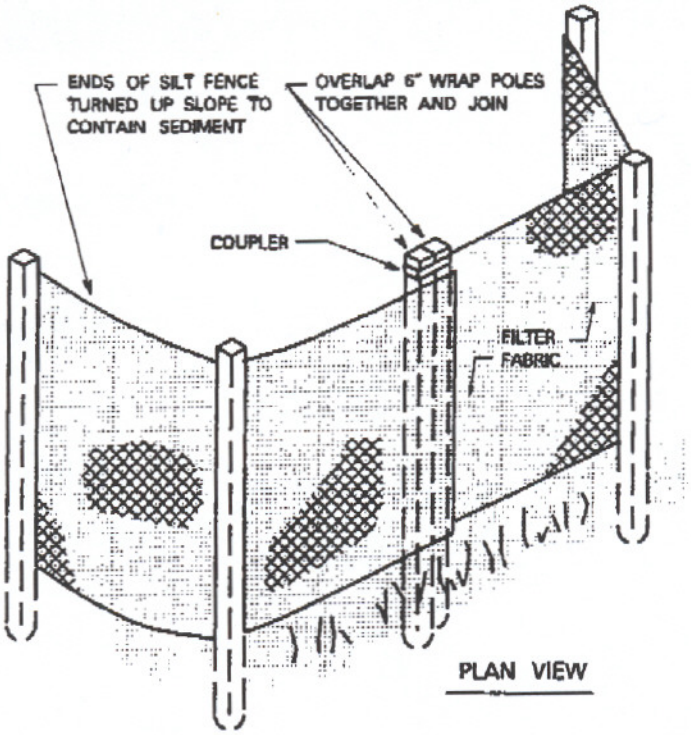


PLAN VIEW

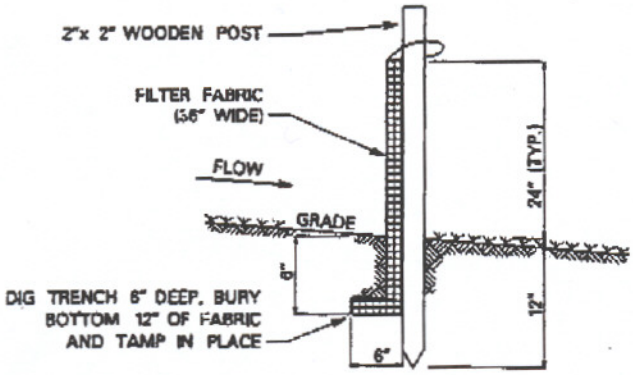


CROSS SECTION

## INSTALLATION REQUIREMENTS:

- WHEN USING SILT FENCE, PLACE IT:
  - BETWEEN DISTURBED AREAS AND DOWN-SLOPE ENVIRONMENTAL RESOURCE AREAS
  - AT THE BASE OF ALL SLOPES NEXT TO WETLANDS, WATERBODIES, AND ROAD CROSSINGS
  - AT THE INLET AND OUTLET OF OPEN DRAINAGE STRUCTURES
  - APPROXIMATELY 6 FEET BEYOND THE TOE OF THE SLOPE TO GIVE THE SEDIMENT ROOM TO COLLECT
- USE SANDBAGS OR BACKFILLING TO KEY IN THE BOTTOM OF THE FABRIC WHERE IT IS NOT FEASIBLE TO TRENCH IT IN (LEDGES, ROCKY SOIL, LARGE ROOTS, ETC.)

## MAINTENANCE REQUIREMENTS:

- INSPECT SILT FENCE:
  - DAILY IN AREAS OF ACTIVE CONSTRUCTION
  - WEEKLY IN AREAS WITH NO CONSTRUCTION
  - WITHIN 24 HOURS FOLLOWING EACH MAJOR STORM EVENT
- REPAIR OR REPLACE SILT FENCE AS NEEDED
- REMOVE ACCUMULATED SEDIMENTS TO AN UPLAND AREA AS NEEDED

I.G. ESC0001.DGN

LC Smith 18 MAY 2001

| | | |
|---|---|---|
| | SILT FENCE INSTALLATION AND MAINTENANCE | FIGURE #7 |
| | | DWG. ES-0007 REV. |

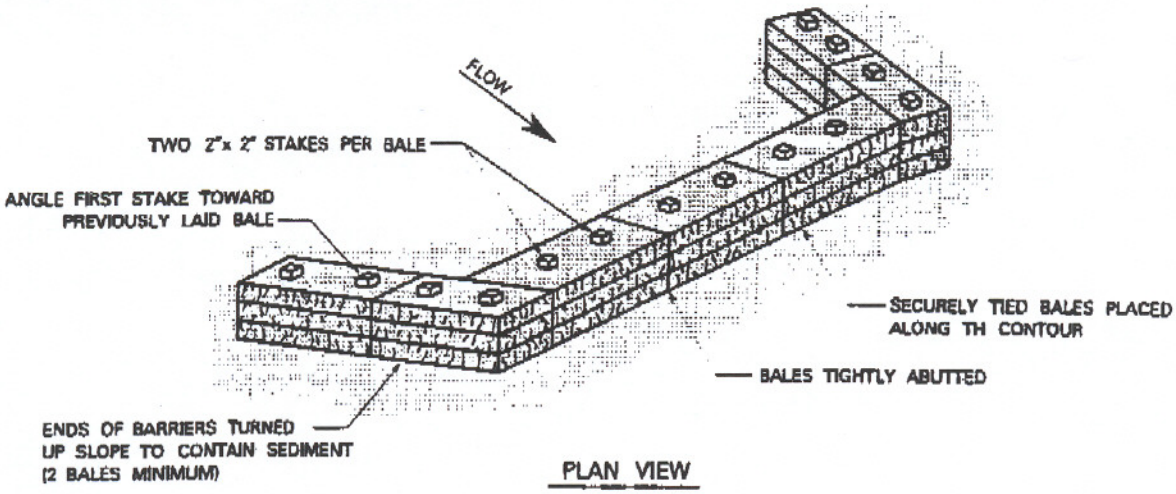


PLAN VIEW

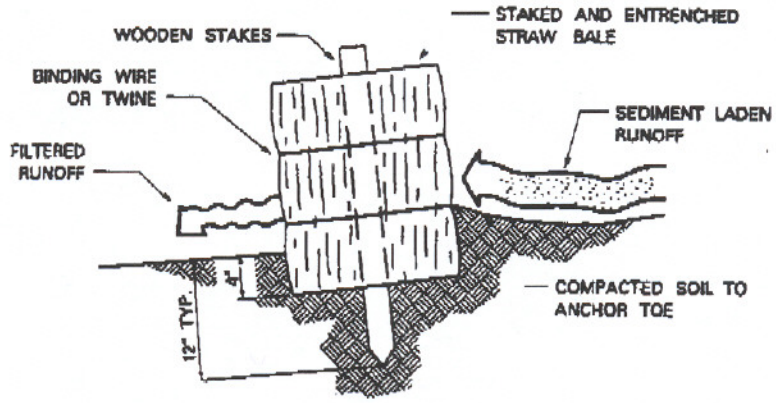


CROSS-SECTION

## INSTALLATION REQUIREMENTS:

- WHEN USING STRAW BALES, PLACE THEM:
  - WITH THEIR ENDS TIGHTLY ABUTTING AND EMBEDDED IN THE SOIL A TYPICAL OF 4".
  - BETWEEN DISTURBED AREAS AND DOWN-SLOPE ENVIRONMENTAL RESOURCE AREAS.
  - AT THE BASE OF ALL SLOPES NEXT TO WETLANDS, WATERBODIES, AND ROAD CROSSINGS
  - AT THE INLET AND OUTLET OF OPEN DRAINAGE STRUCTURES.
  - APPROXIMATELY 6 FEET BEYOND THE TOE OF THE SLOPE TO GIVE THE SEDIMENT ROOM TO COLLECT.
- KEY IN THE BOTTOM OF THE BALE. IN AREAS WHERE IT IS NOT FEASIBLE TO TRENCH IT IN (LEDGES, ROCKY SOIL, LARGE TREE ROOTS, ETC.), USE NATIVE SOIL AS BACKFILL UP-SLOPE OF THE BALE.
- IF USED IN CONJUNCTION WITH SILT FENCE, BALES ARE PLACED UPSLOPE OF THE SILT FENCE AND DO NOT NEED TO BE TRENCHED IN.

## MAINTENANCE REQUIREMENTS:

- INSPECT BALES:
  - DAILY IN AREAS OF ACTIVE CONSTRUCTION.
  - WEEKLY IN AREAS WITH NO CONSTRUCTION.
  - WITHIN 24 HOURS FOLLOWING EACH MAJOR STORM EVENT.
- REPAIR OR REPLACE BALES AS NEEDED.
- REMOVE ACCUMULATED SEDIMENTS TO AN UPLAND AREA AS NEEDED.

| | | |
|---|---|---|
| I.C. ESE0008.DGN 18 MAY 2001 | STRAW BALE INSTALLATION AND MAINTENANCE | FIGURE #8 |
| | | DWG. ES-0008 REV. |

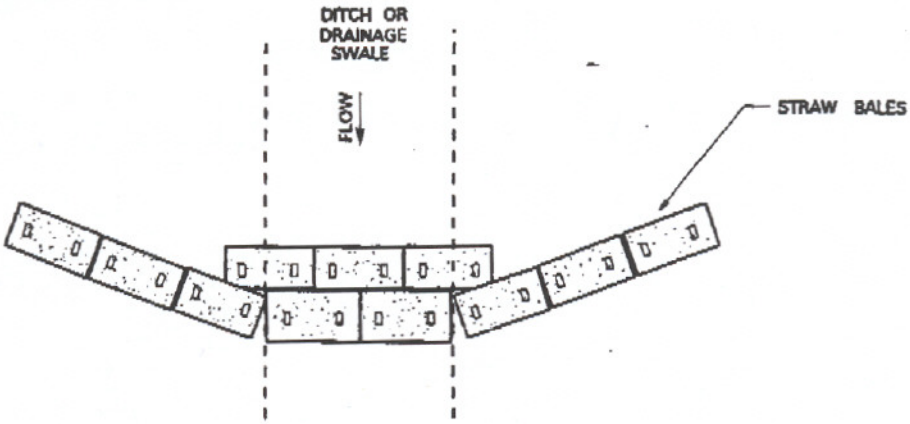


PLAN VIEW
N.T.S.

POINTS A SHALL BE HIGHER THAN POINT B

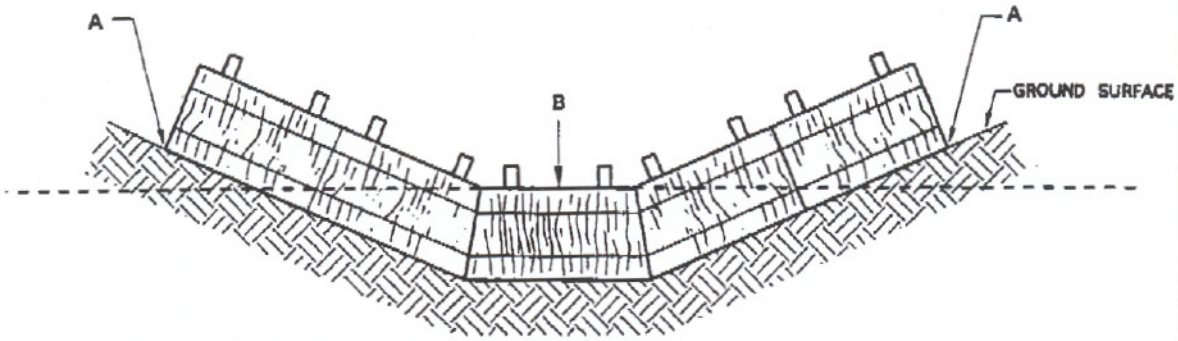


CROSS-SECTION
N.T.S.

LG.ESE0009.DGN TCSmith 18 MAY 2001

| | | |
|---|---|---|
| | STRAW BALE INSTALLATION FOR A CHECK DAM IN A DRAINAGE WAY | FIGURE #9 |
| | | DWG. ES-0009 REV. |

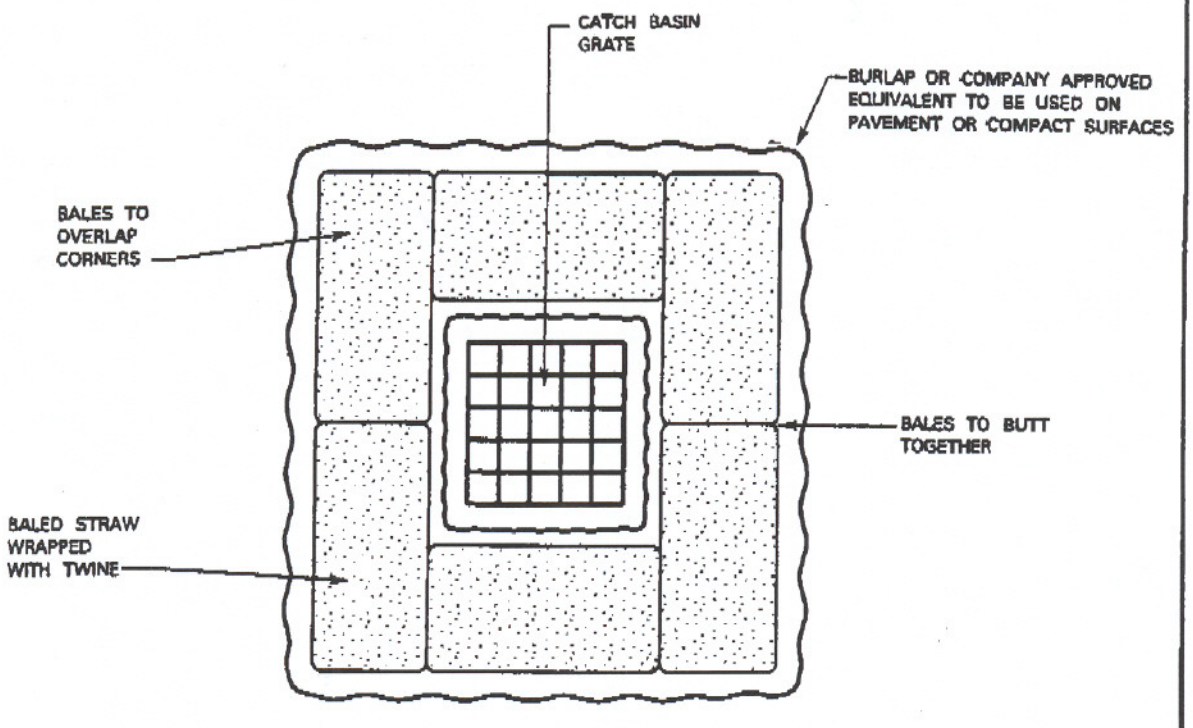


1. SURROUND STREET DRAINAGE STRUCTURE INLET WITH BALES PRIOR TO CONSTRUCTION AND MAINTAIN UNTIL CONSTRUCTION IS COMPLETED.
2. FOR BALES PLACED ON PAVEMENT (OR COMPACT SURFACES), PLACE BURLAP OR COMPANY APPROVED EQUIVALENT BETWEEN PAVEMENT AND BALE.
3. REMOVE ACCUMULATED SEDIMENT.

| | | |
|---|---|---|
| | STORM DRAIN INLET PROTECTION | FIGURE #10 |
| | | DWG. ES-0010 REV. |

LC. ESED010.DGN JCSmith 18 MAY 2001

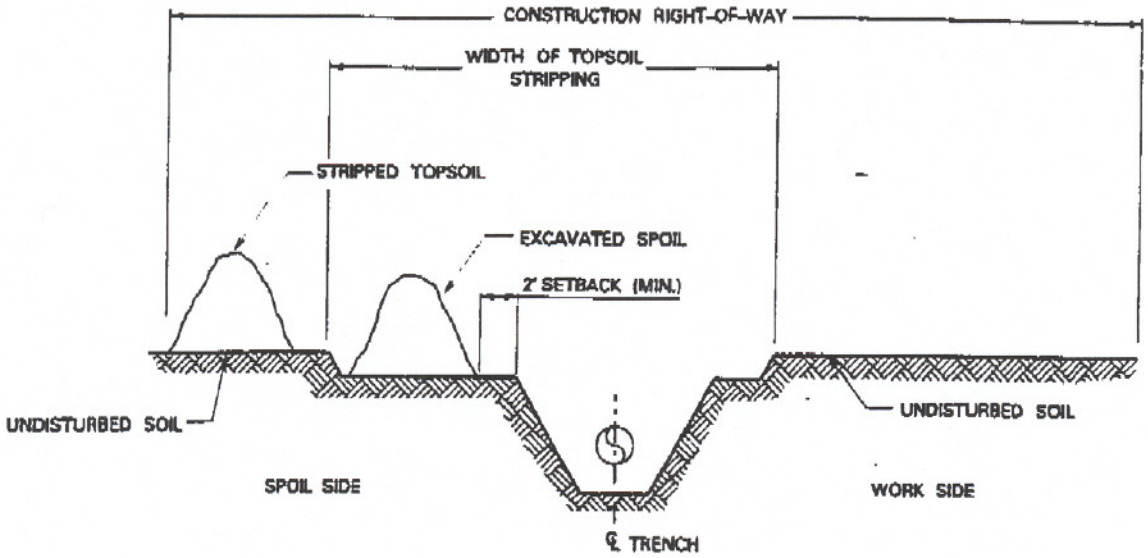


DITCH PLUS SPOILSIDE TOPSOIL SEGREGATION

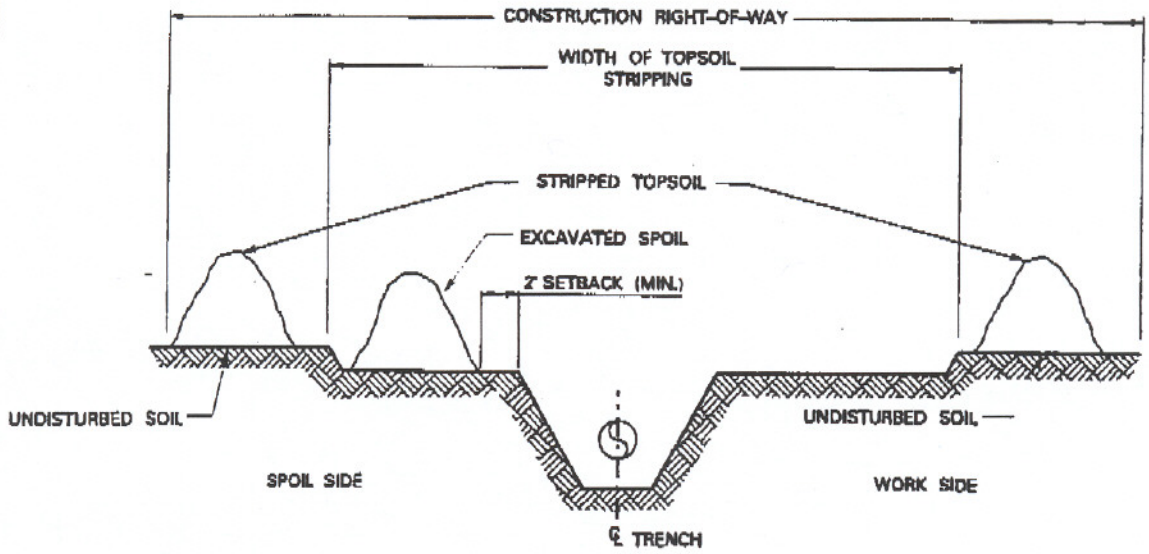


FULL RIGHT-OF-WAY TOPSOIL STRIPPING

NOTES:

1. TOPSOIL MAY BE STORED IN LOCATIONS AS SHOWN ABOVE, OR AT OTHER COMPANY APPROVED LOCATIONS WITHIN THE CONSTRUCTION ROW.
2. LEAVE GAPS IN SPOIL PILES FOR WATER RUN-OFF

TC Smith 18 MAY 2001

LG. ESE0011.DGN

| | | |
|---|---|---|
| | ROW TOPSOIL SEGREGATION TECHNIQUES | FIGURE #11 |
| | | DWG. ES-0011 REV. |

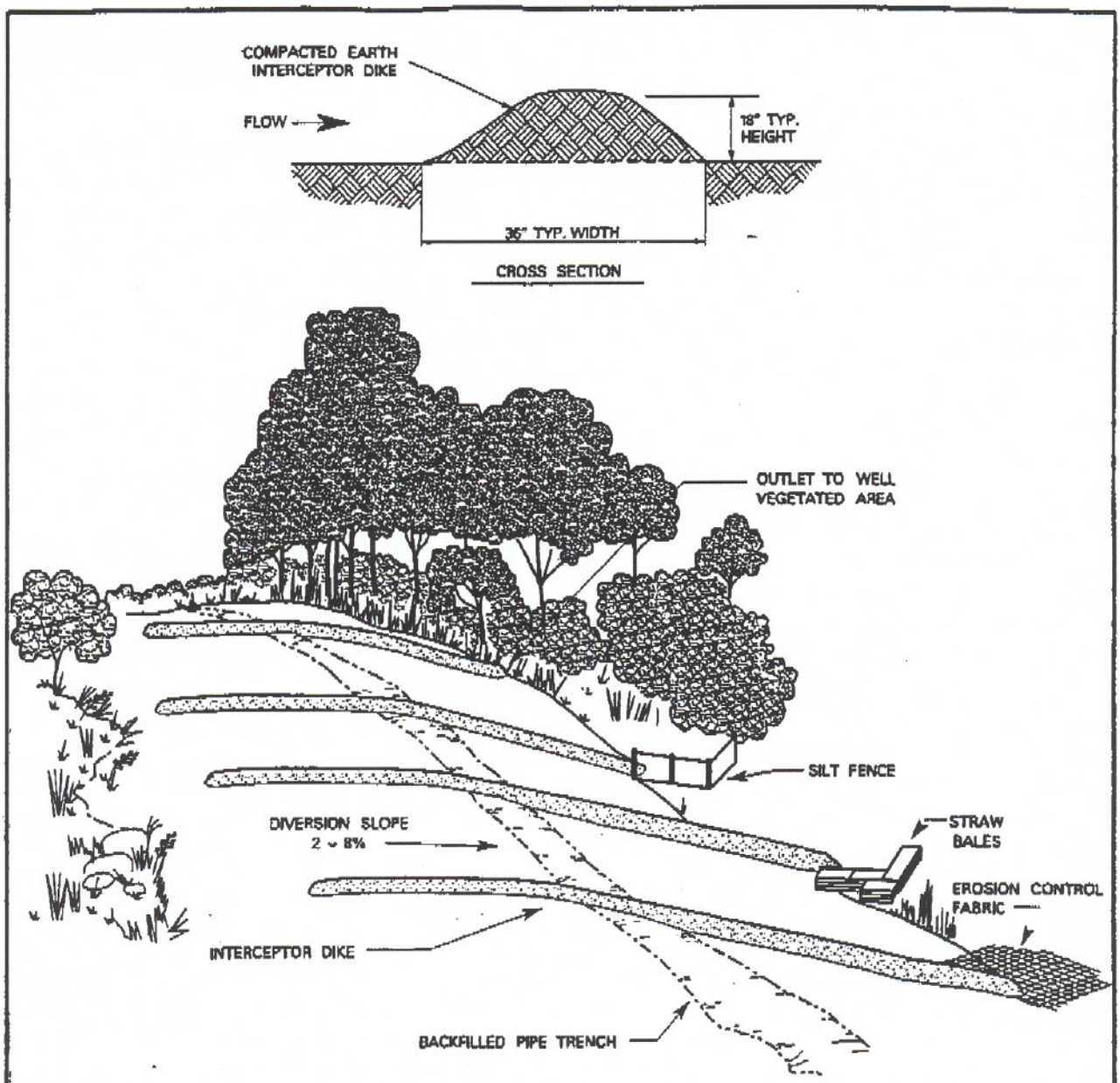


INSTALLATION REQUIREMENTS:

- INSTALL IN ALL AREAS EXCEPT RESIDENTIAL OR AGRICULTURAL (UNLESS AUTHORIZED BY LANDOWNER).
- CONSTRUCT USING EARTH FILLED SACKS OR STAKED STRAW BALES FOR TEMPORARY OR COMPACTED EARTH AND ROCK FOR PERMANENT
- INSTALL WITH A 2-8% OUTFALL ANGLE.
- FILTER RUN-OFF WATER BY CONSTRUCTING THE OUTLET IN A WELL VEGETATED STABLE AREA, OR BY USING AN ENERGY DISSIPATING DEVICE (SILT FENCE, STRAW BALES, EROSION CONTROL FABRIC), AS DIRECTED BY THE ENVIRONMENTAL INSPECTOR.

MAINTENANCE REQUIREMENTS:

- INSPECT DURING AND FOLLOWING CONSTRUCTION AND MAKE REPAIRS AS NEEDED.
- KEEP THE CHANNEL FREE OF DEBRIS AND OBSTRUCTIONS.
- SEED AND MULCH PERMANENT INTERCEPTOR DIKES FOLLOWING CONSTRUCTION.

INTERCEPTOR DIKE SPACING

| SLOPE (%) | SPACING (FT.) |
|---|---|
| 5-15 | 300 |
| >15-30 | 200 |
| >30 | 100 |

I.G. ESE0012.DGN

T.E.Smith 18 MAY 2001

INTERCEPTOR DIKE INSTALLATION AND MAINTENANCE

FIGURE #12

DWG. ES-0012 REV.

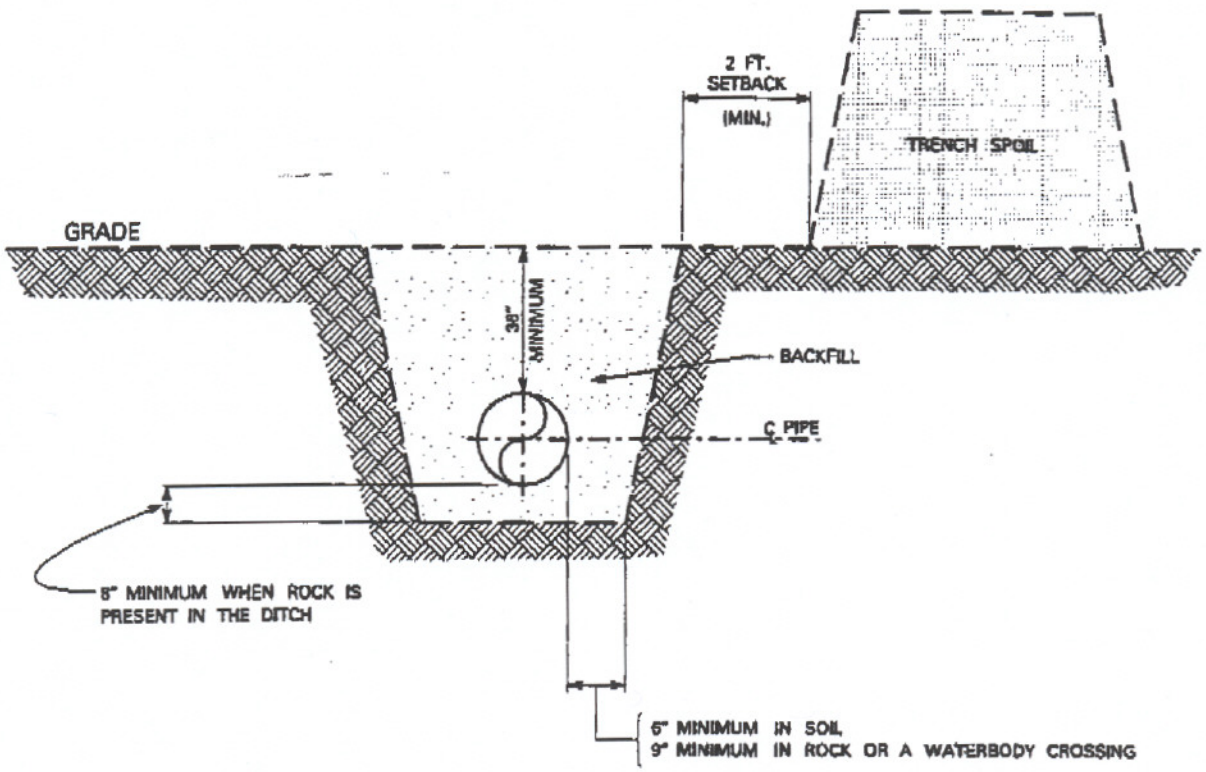


CROSS-SECTION VIEW OF TYPICAL TRENCH

NOTES:

1. ALL ORIGINAL CONTOURS WILL BE RE-ESTABLISHED UPON COMPLETION OF PIPE INSTALLATION. EXCEPT IN WETLANDS, A CROWN MAY BE LEFT TO ACCOUNT FOR DITCH SETTLING, AS DIRECTED BY THE ENVIRONMENTAL INSPECTOR.
2. IN COLD WATER FISHERY STREAMS, THE TOP 12" OF THE TRENCH WILL BE BACKFILLED WITH CLEAN GRAVEL OR NATIVE COBBLES.

| | | |
|---|---|---|
| | TYPICAL TRENCH DETAIL | FIGURE #13 |
| | | DWG. ES-0013 REV. |

I.G. ESE0013.DGN

TC Smith 18 MAY 2001

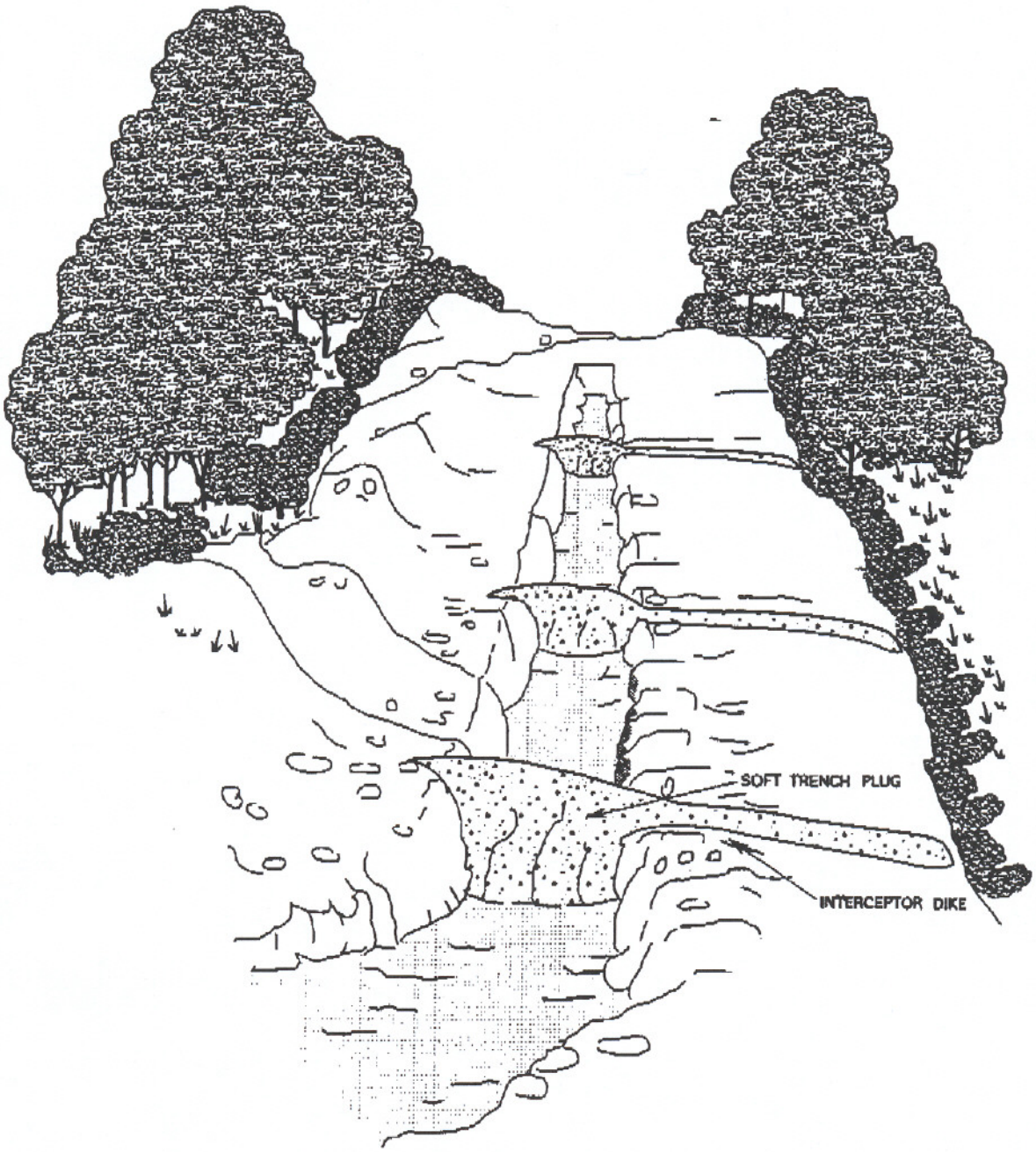


NOTES:

1. TEMPORARY TRENCH PLUGS MAY BE USED IN CONJUNCTION WITH INTERCEPTOR DIKES TO PREVENT WATER FROM OVERFLOWING INTO SENSITIVE RESOURCE AREAS.

2. DIVERT TRENCH OVERFLOW TO A WELL-VEGETATED OFF-ROW LOCATION.

I.C. ESE0014.DGN

JCSmith 18 MAY 2001

| | | |
|---|---|---|
| | TEMPORARY TRENCH PLUGS | FIGURE #14 |
| | | DWG. ES-0014 REV. |

Appendix E3

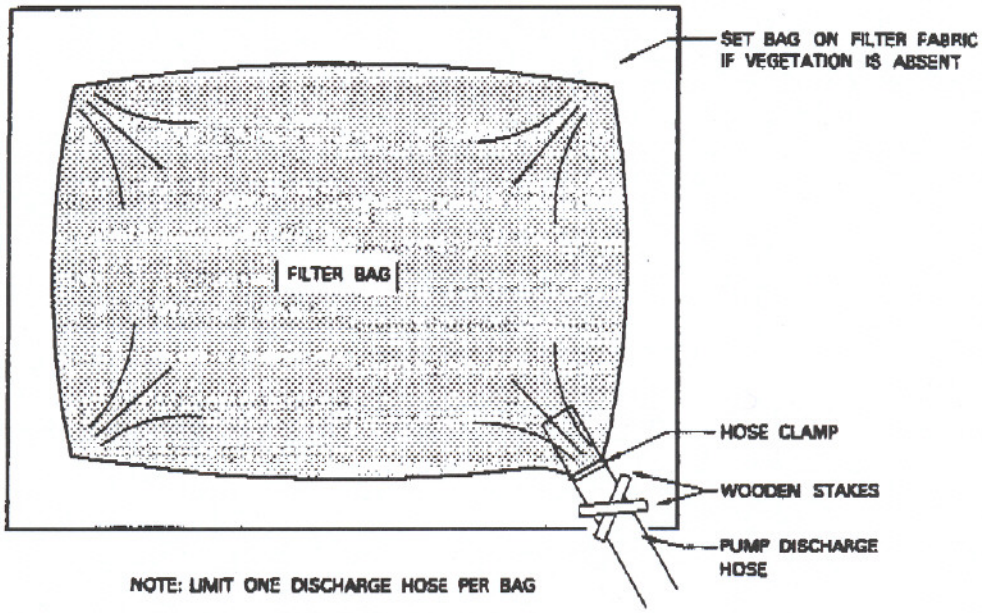


NOTE: LIMIT ONE DISCHARGE HOSE PER BAG

PLAN VIEW
N.T.S.

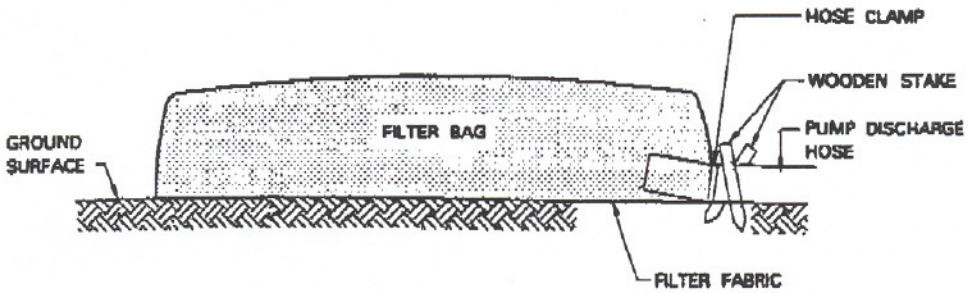


CROSS-SECTION
N.T.S.

TCSmith 18 MAY 2001

I.G. ESE0015.dgn

| | | |
|---|---|---|
| | FILTER BAG | FIGURE #15 |
| | | DWG. ES-0015 REV. |

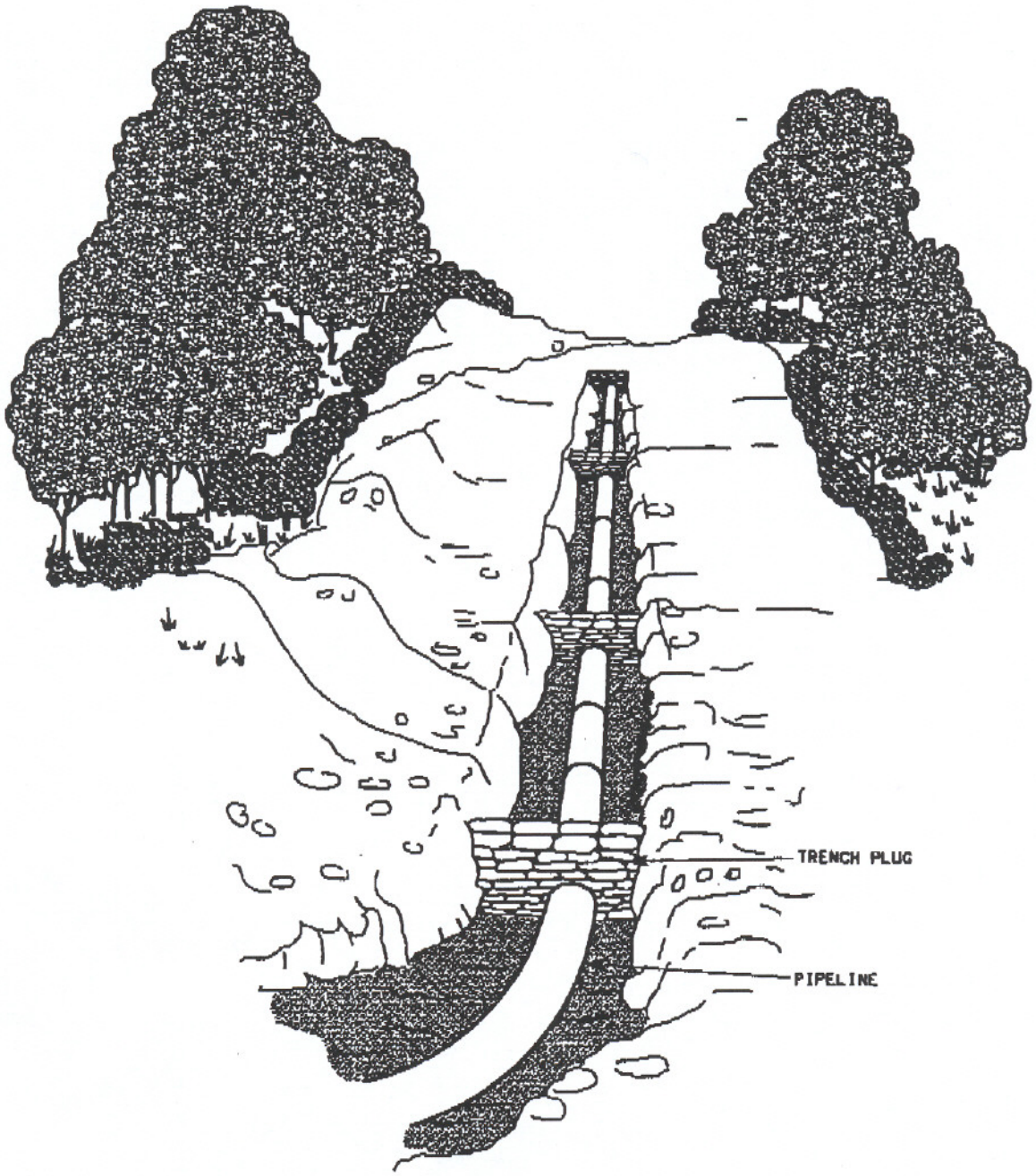


| SLOPE (%) | SPACING (FT) |
|---|---|
| 5–15 | 300 |
| >15–30 | 200 |
| >30 | 100 |

I.C.Smith 18 MAY 2001

I.D. ESE0016.DGN

PERMANENT TRENCH PLUGS

FIGURE #16

DWG. ES–0016 REV.

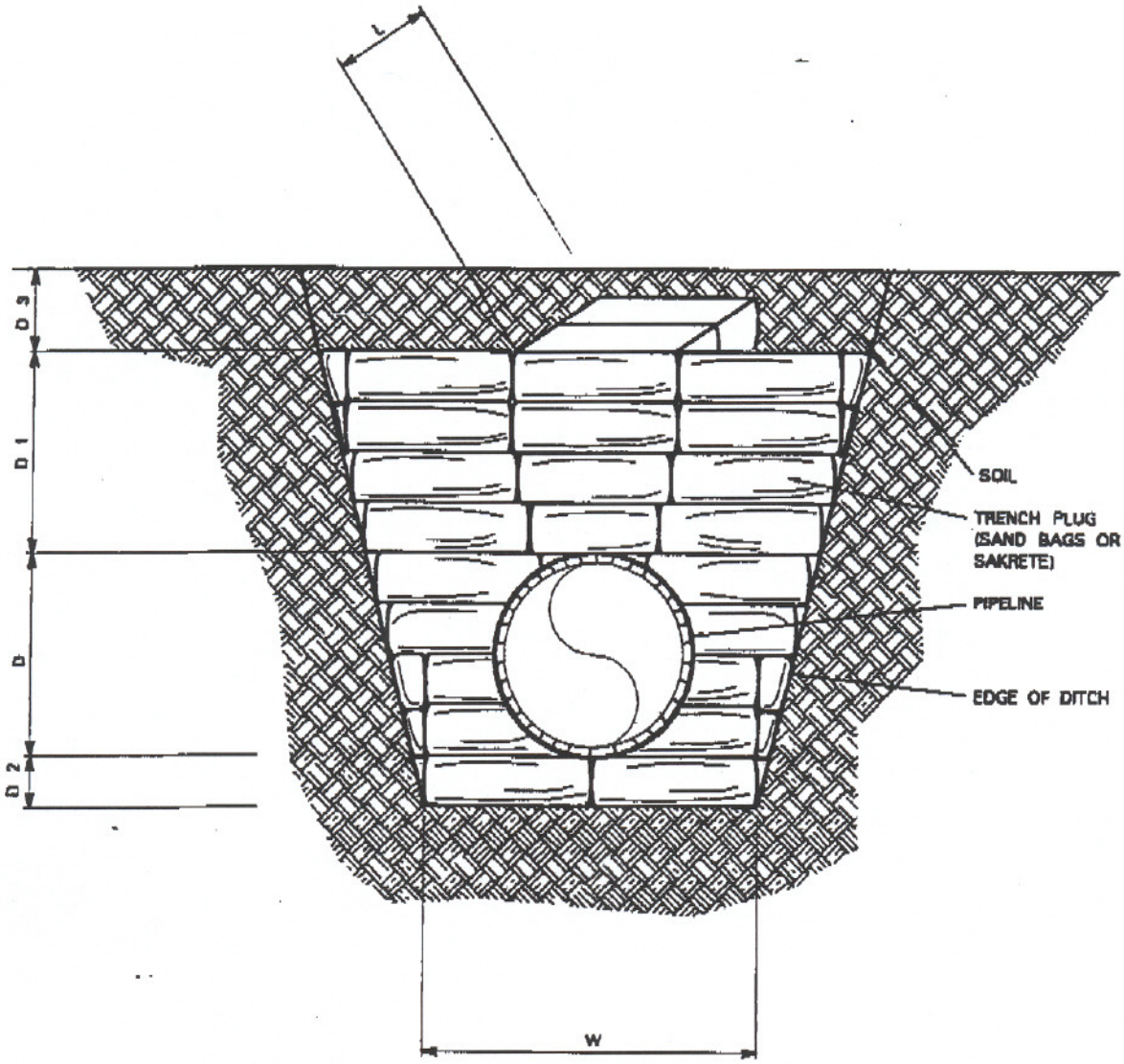


D = PIPE DIAMETER
D1 = APPROXIMATELY 24"
D2 = APPROXIMATELY 6" (8" MIN. IN ROCK)
D3 = APPROXIMATELY 12"
W = D + 2 to 4 FEET
L = APPROXIMATELY 18" - 24"
D1 + D3 = 36" MINIMUM

NOTE:

USE OF SAKRETE SHALL REQUIRE PRIOR COMPANY APPROVAL.

LG. ES0017.DGN TCSmith 18 MAY 2001

| | | |
|---|---|---|
| | TRENCH PLUG DETAIL | FIGURE #17 |
| | | DWG. ES-0017 REV. |

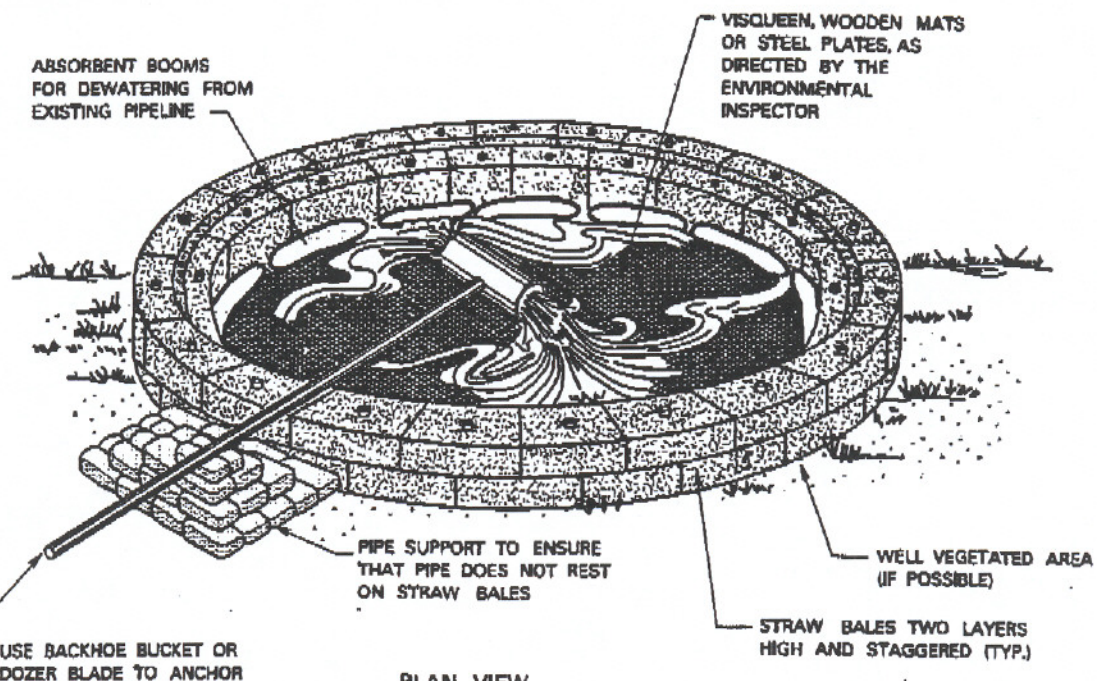


PLAN VIEW

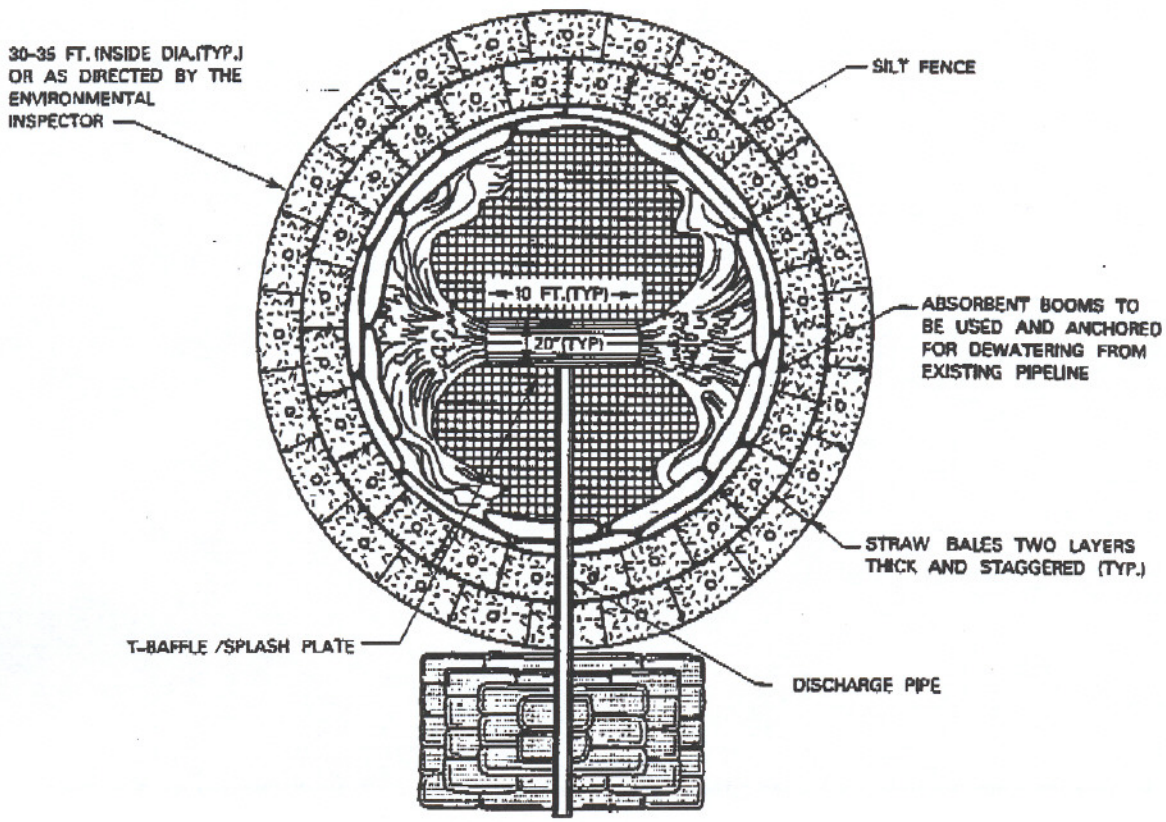


TOP VIEW

| | | |
|---|---|---|
| | DEWATERING STRUCTURE FOR HYDROSTATIC TESTING | FIGURE #18 |
| | | DWG. ES-0018 REV. |

LG. ES0018.DGN 18 MAY 2001

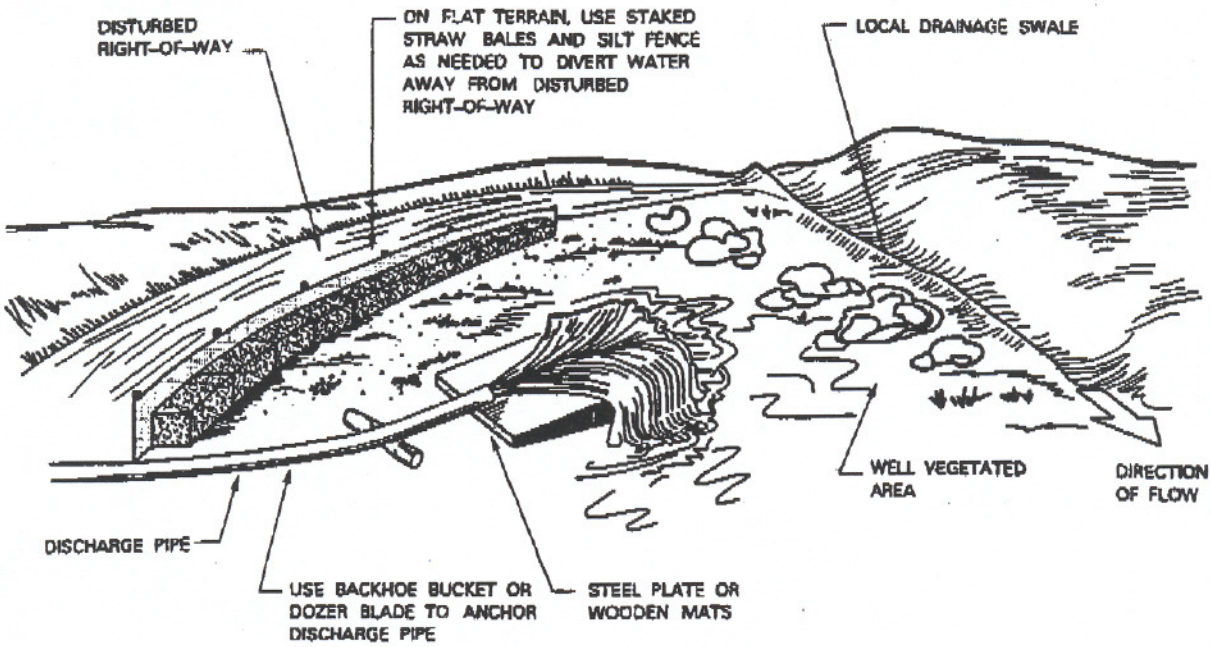


NOTE:

1. THIS DEWATERING STRUCTURE CAN ONLY BE USED FOR SMALL DISCHARGES FROM NEW PIPELINES WHEN A HYDROSTATIC TEST PACKAGE HAS NOT BEEN ISSUED. IT IS SUBJECT TO APPROVAL BY THE ENVIRONMENTAL INSPECTOR.

TCSmith 18 MAY 2001

I.G. ES0019.DGN

| | | |
|---|---|---|
| | ALTERNATE DEWATERING STRUCTURE FOR HYDROSTATIC TESTING | FIGURE #19 |
| | | DWG. ES-0019 REV. |

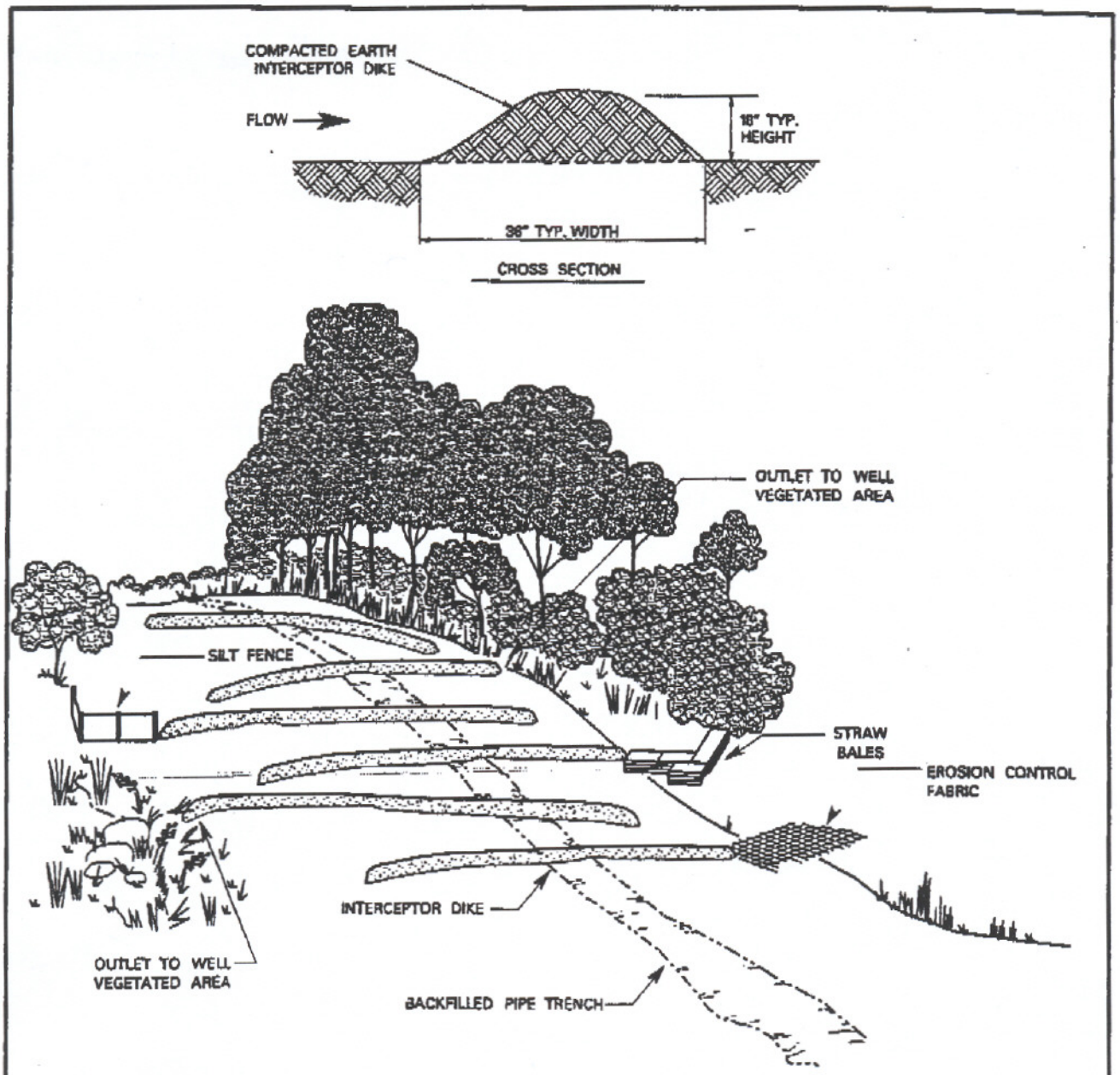


**INSTALLATION REQUIREMENTS:**

- INSTALL IN ALL AREAS EXCEPT RESIDENTIAL OR AGRICULTURAL (UNLESS AUTHORIZED BY LANDOWNER).
- CONSTRUCT USING EARTH FILLED SACKS OR STAKED STRAW BALES FOR TEMPORARY OR COMPACTED EARTH AND ROCK FOR PERMANENT
- INSTALL WITH A 2-3% OUTFALL ANGLE IF NECESSARY.
- FILTER RUN-OFF WATER BY CONSTRUCTING AN OUTLET USING AN ENERGY DISSIPATING DEVICE (SILT FENCE, STRAW BALES, EROSION CONTROL FABRIC), AS DIRECTED BY THE ENVIRONMENTAL INSPECTOR.

**MAINTENANCE REQUIREMENTS:**

- INSPECT DURING AND FOLLOWING CONSTRUCTION AND MAKE REPAIRS AS NEEDED.
- KEEP THE CHANNEL FREE OF DEBRIS AND OBSTRUCTIONS.
- SEED AND MULCH PERMANENT INTERCEPTOR DIKES FOLLOWING CONSTRUCTION.

| | | |
|---|---|---|
| | CHEVRON INTERCEPTOR DIKE INSTALLATION AND MAINTENANCE | FIGURE #20 |
| | | DWG. ES-0020 REV. |

I.D. ESE0020.DGN 18 MAY 2001

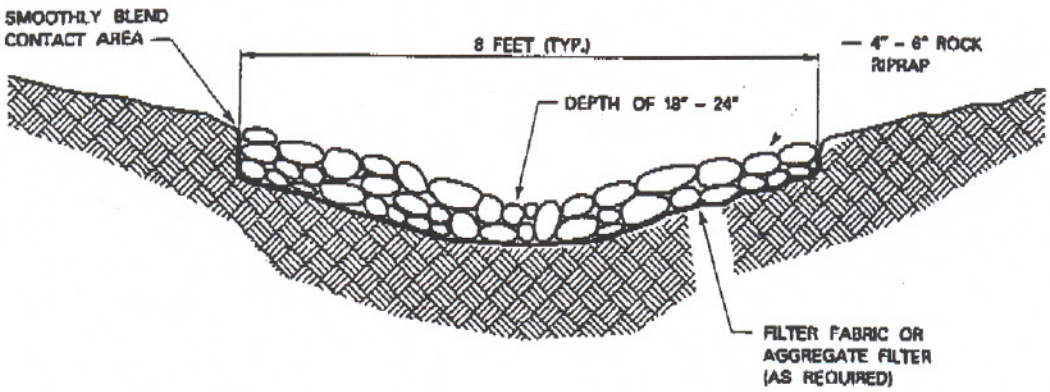


**INSTALLATION REQUIREMENTS:**

1. RIPRAP CHANNELS CAN BE CONSTRUCTED WITH GRASS-LINED SLOPES WHERE SITE CONDITIONS WARRANT.
2. STABILIZE CHANNEL INLET POINTS AND INSTALL OUTLET PROTECTION (AS NEEDED) DURING CHANNEL INSTALLATION.
3. INSTALL ENERGY DISSIPATING DEVICE (AS NEEDED) TO PREVENT SCOUR TO THE RECEIVING OUTLET.
4. REMOVE ALL TREES, BRUSH, AND OTHER OBJECTIONABLE MATERIAL FROM THE CHANNEL.
5. INSTALL FILTER FABRIC OR GRAVEL LAYER TO PREVENT PIPING (AS REQUIRED)

**MAINTENANCE REQUIREMENTS:**

1. INSPECT CHANNEL DURING AND FOLLOWING CONSTRUCTION AND MAKE REPAIRS AS NEEDED.
2. KEEP THE CHANNEL FREE OF DEBRIS AND OBSTRUCTIONS.

| | | |
|---|---|---|
| | ROCK LINED DRAINAGE SWALE INSTALLATION AND MAINTENANCE | FIGURE #21 |
| | | DWG. ES-0021 REV. |

I.G. ESE0021.DGN

TC Smith 18 MAY 2001

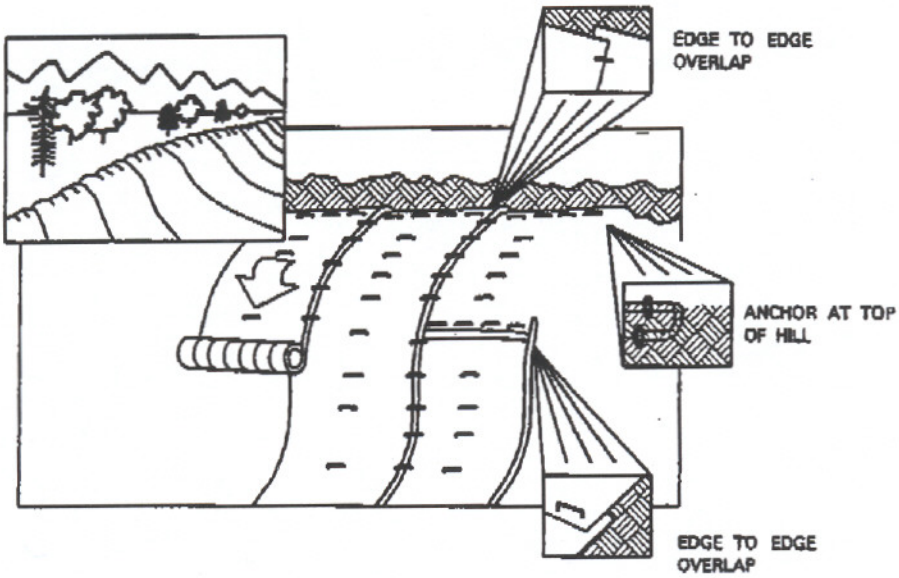


NOTES:

1. EROSION CONTROL MATTING (BLANKETS) SHALL BE USED AT LOCATIONS IDENTIFIED IN THE PLAN AND/OR AS DIRECTED BY THE ENVIRONMENTAL INSPECTOR.
2. EROSION CONTROL MATTING SHALL MEET THE REQUIREMENTS SPECIFIED IN THE PLAN AND/OR AS DIRECTED BY THE ENVIRONMENTAL INSPECTOR.
3. STAPLES SHALL BE MADE OF 11 GAUGE WIRE, U-SHAPED WITH 6" LEGS AND A 1" CROWN. STAPLES SHALL BE DRIVEN INTO THE GROUND FOR THE FULL LENGTH OF THE STAPLE LEGS.
4. MATTING SHALL BE INSTALLED ACCORDING TO MANUFACTURER SPECIFICATIONS OR AS STATED BELOW:
   - EXTEND TOP OF BLANKET 3 FEET PAST THE UPPER EDGE OF THE SLOPE.
   - ANCHOR ("KEY") THE UPPER EDGE OF THE BLANKET INTO THE SLOPE USING A 6" DEEP TRENCH AND ROLL THE BLANKET DOWN THE HILL. DOUBLE STAPLE EVERY 12" BEFORE BACKFILLING AND COMPACTING TRENCH.
   - AVOID STRETCHING EROSION CONTROL MATTING (LOOSELY) DURING INSTALLATION.
   - BRING MAT ROLL BACK OVER THE TOP OF THE TRENCH AND CONTINUE TO ROLL DOWN SLOPE. STAPLE EVERY 12" WHERE MAT EXITS THE TRENCH AT THE TOP OF THE SLOPE.
   - WHEN BLANKETS ARE SPLICED DOWN-SLOPE TO ADJOINING MATS (SLOPE OR STREAM BANK MATS), THE UPPER BLANKET SHALL BE PLACED OVER THE LOWER MAT (SHINGLE STYLE) WITH APPROXIMATELY 6" OF OVERLAP. STAPLE THROUGH THE OVERLAPPED AREA EVERY 12".
   - OVERLAP ADJACENT BLANKETS 6". STAPLE EDGES OF BLANKETS AND CENTER EVERY 36".
5. IN LIVESTOCK AREAS WHERE EROSION CONTROL MATTING IS APPLIED TO THE SLOPES, FENCING WILL BE USED IF NECESSARY TO EXCLUDE LIVESTOCK, WITH PERMISSION OF THE LANDOWNER.
6. MONITOR WASHOUTS, STAPLE INTEGRITY OR MAT MOVEMENT. REPLACE OR REPAIR AS NECESSARY.

| | | |
|---|---|---|
| | TYPICAL MATTING ON SLOPES | FIGURE #22 |
| | | DWG. ES-0022 REV. |

I.G. ESE0022.DGN 18 MAY 2001 TCSmith

A. BURY THE TOP END OF THE JUTE STRIPS IN A 6" TRENCH (TYPICAL)

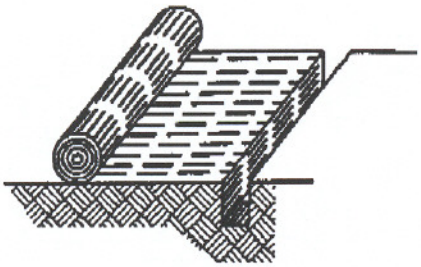

B. DOUBLE STAPLE EVERY 12" BEFORE BACKFILLING AND COMPACTING.

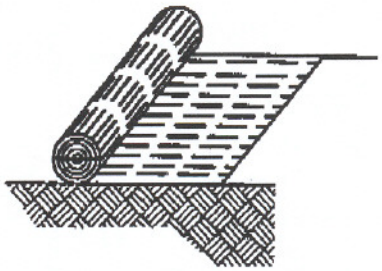

C. BURY AND TAMP UPPER END OF LOWER STRIP AS IN "A" AND "B". OVERLAP END OF TOP STRIP 4" AND STAPLE.

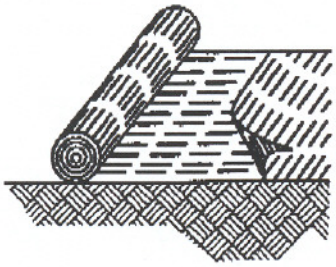

D. WHERE FABRIC STOPS, FOLD, BURY, AND TAMP JUTE STRIPS IN SLIT TRENCH. PROVIDE DOUBLE ROW OF STAPLES

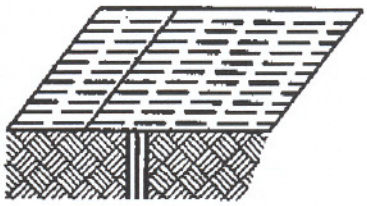

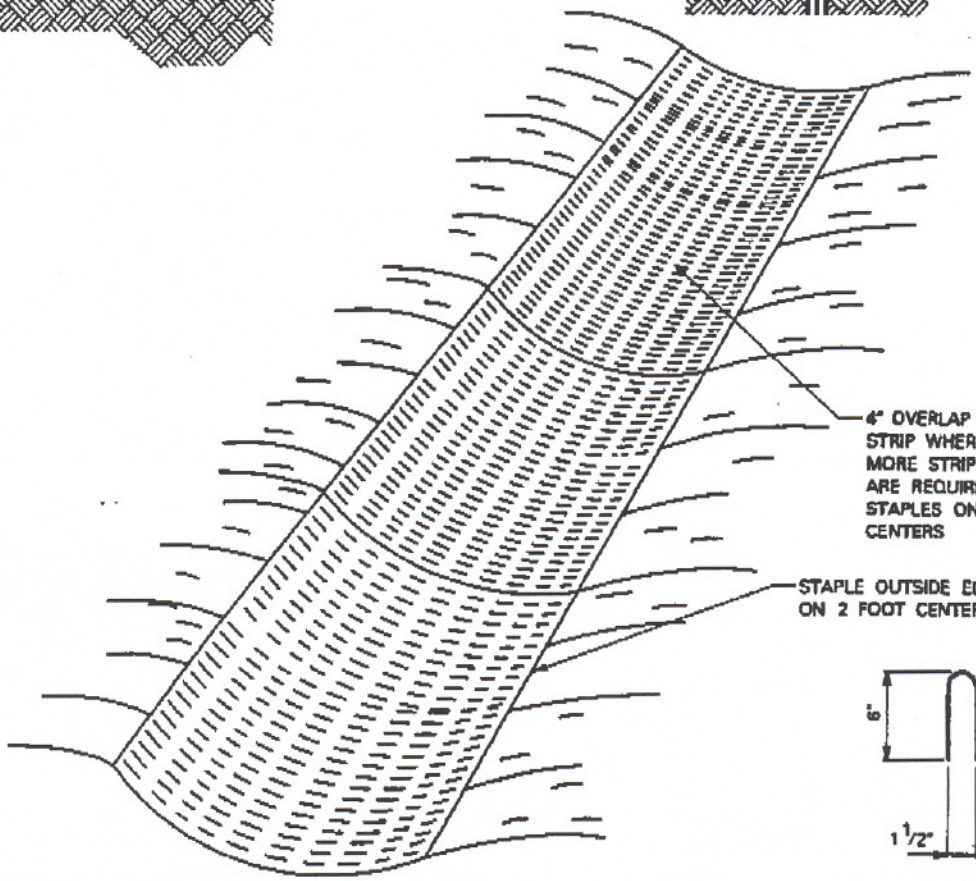


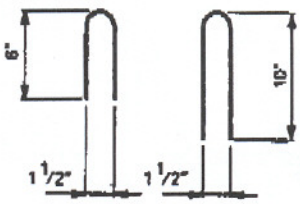


TYPICAL STAPLES

NO. 11 GAUGE WIRE

| | | |
|---|---|---|
| | EROSION CONTROL FABRIC INSTALLATION | FIGURE #23 |
| | | DWG. ES-0023 REV. |

L.G. ESE0023.DGN TCSmith 18 MAY 2001

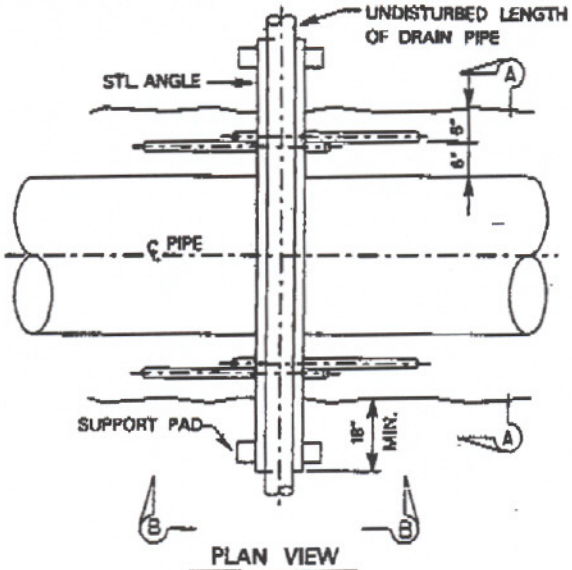


PLAN VIEW

N.T.S.

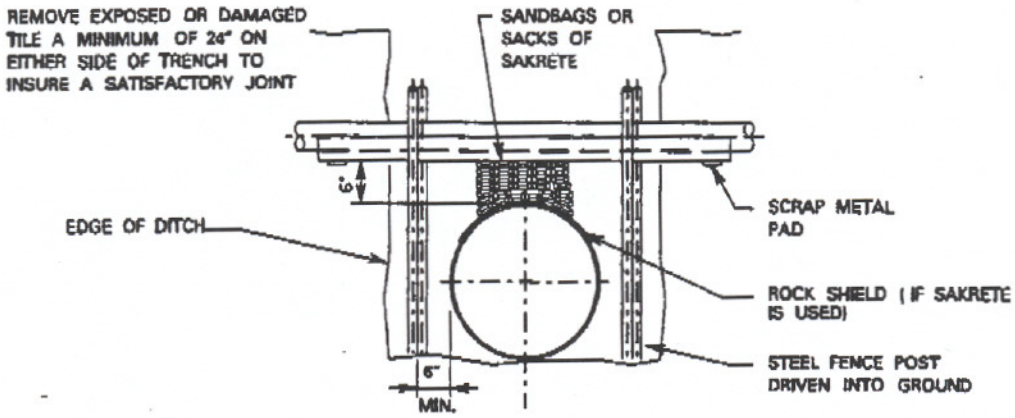


SECTION "A-A"

N.T.S.

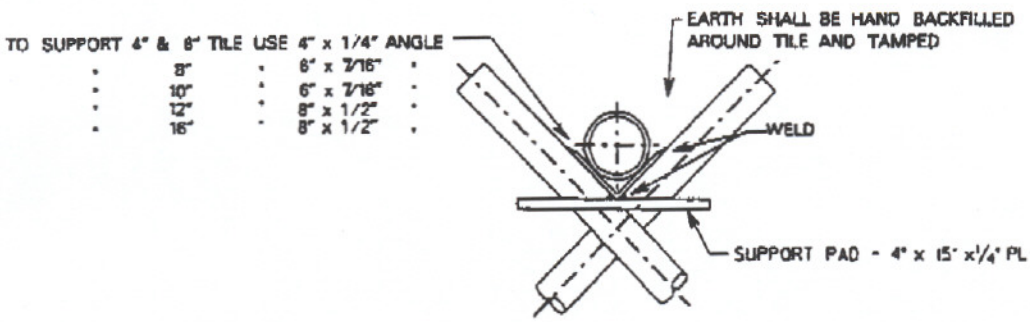


SECTION "B-B"

N.T.S.

NOTE:
USE OF SAKRETE SHALL REQUIRE PRIOR COMPANY APPROVAL.

TCSmith 18 MAY 2001

I.G. ESE0024.DGN

| | | |
|---|---|---|
| | DRAIN TILE REPAIR PROCEDURE | FIGURE #24 |
| | | DWG. ES-0024 REV. |

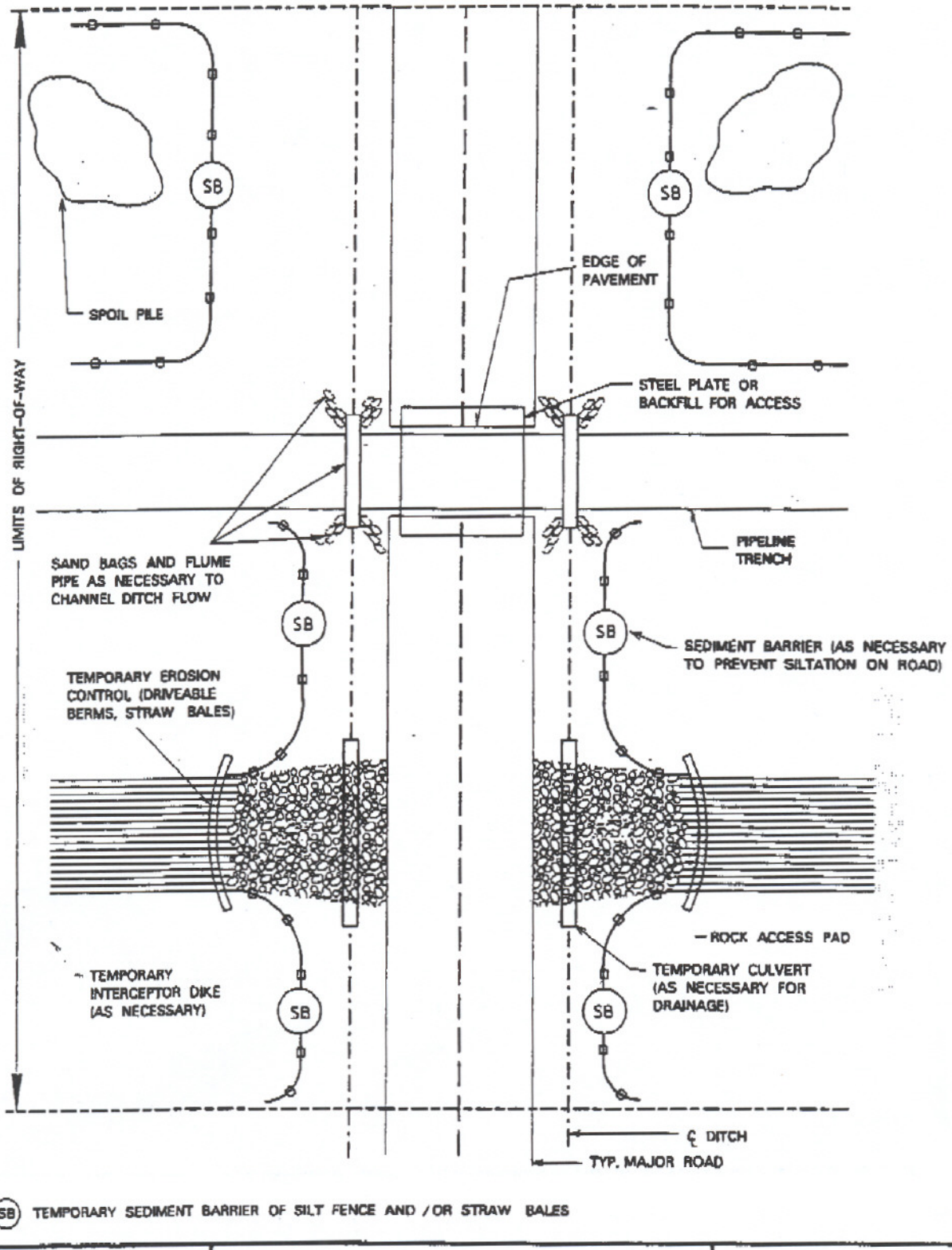


(SB) TEMPORARY SEDIMENT BARRIER OF SILT FENCE AND / OR STRAW BALES

TCSmith 18 MAY 2001

I.C. ES0025.DGN

| | | |
|---|---|---|
| | TYPICAL PAVED ROAD CROSSING CONTROL MEASURES (OPEN CUT) | FIGURE #25 |
| | | DWG. ES–0025 REV. |

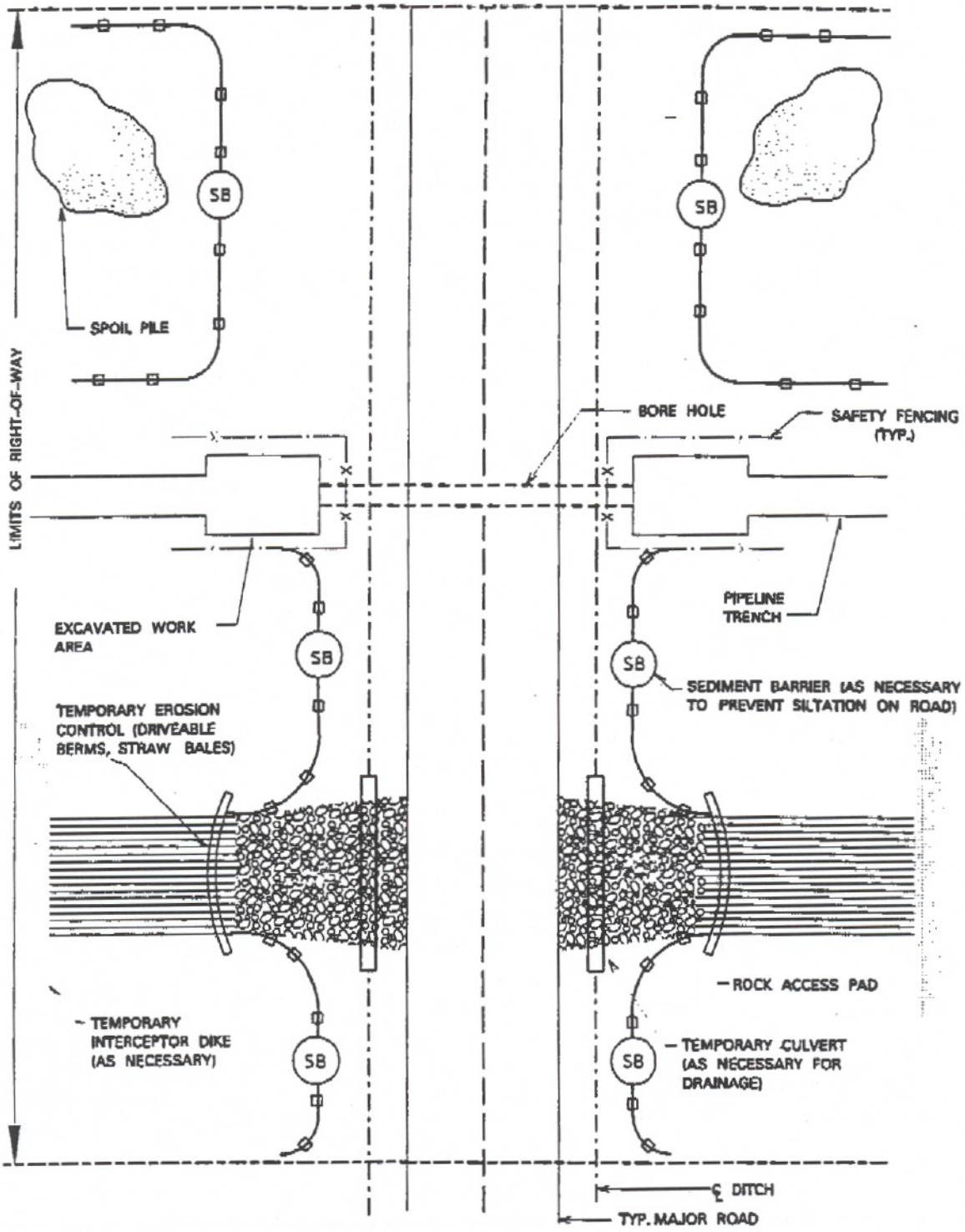


(SB) TEMPORARY SEDIMENT BARRIER OF SILT FENCE AND / OR STRAW BALES

TCSmith 18 MAY 2001

I.G. ESE0026.DGN

| | | |
|---|---|---|
| | TYPICAL PAVED ROAD CROSSING CONTROL MEASURES (BORED) | FIGURE #26 |
| | | DWG. ES-0026 REV. |

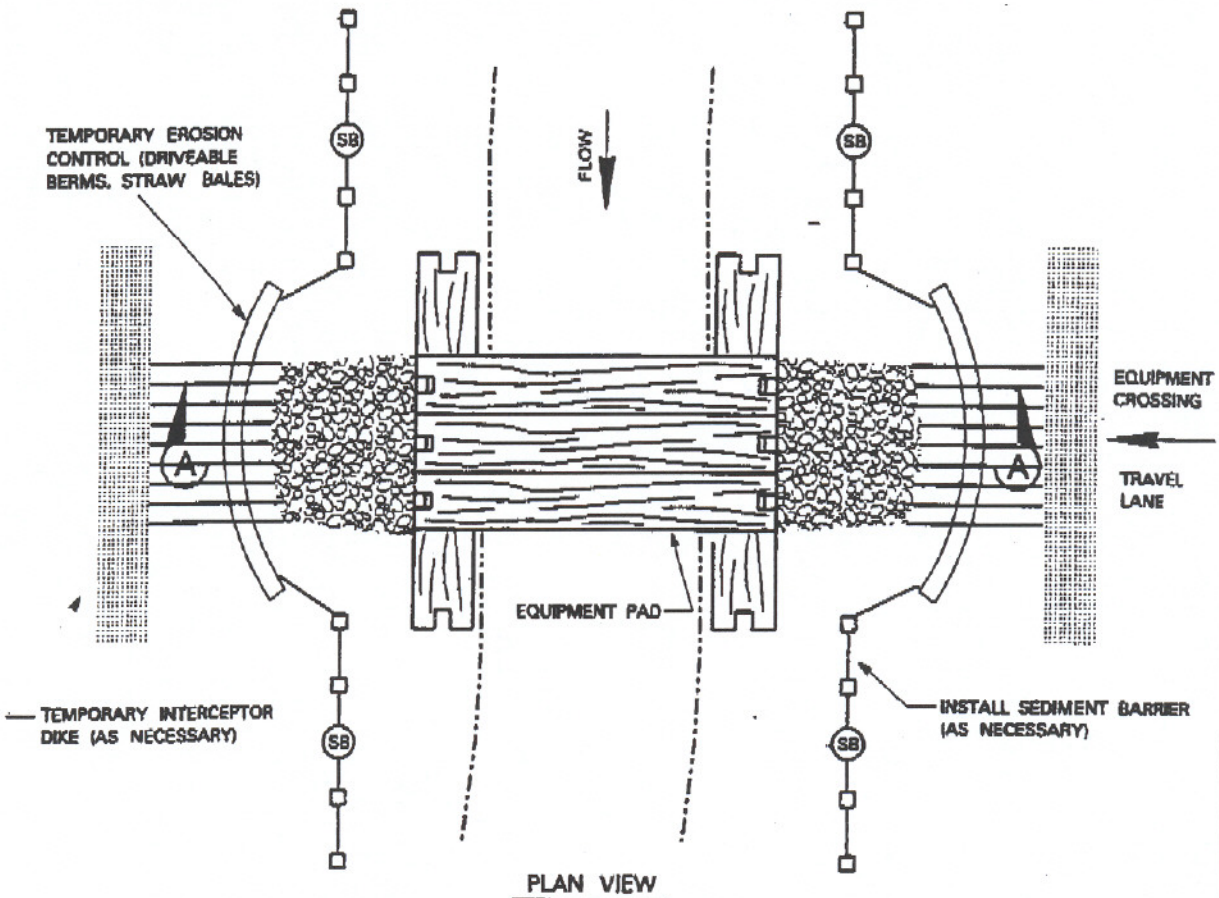


PLAN VIEW
N.T.S.

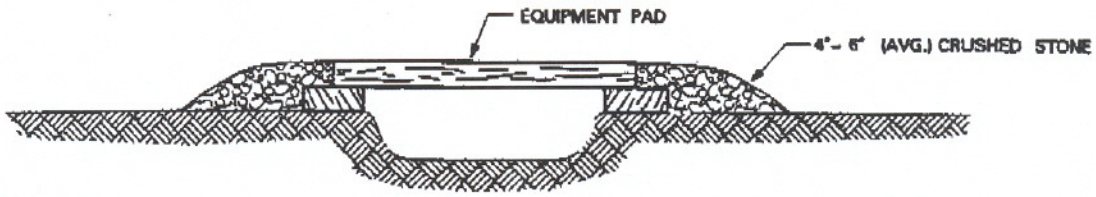


SECTION "A-A"
N.T.S.

NOTES:

1. (SB) TEMPORARY SEDIMENT BARRIER OF SILT FENCE AND /OR STRAW BALES.
2. ADDITIONAL EQUIPMENT PADS CAN BE PUT SIDE BY SIDE IF EXTRA WIDTH IS REQUIRED.
3. EQUIPMENT PAD TYPICALLY CONSTRUCTED OF HARDWOOD; MUST ACCOMMODATE THE LARGEST EQUIPMENT USED.
4. CRUSHED STONE MUST EXTEND A MINIMUM OF 10 FEET FROM THE TOP OF THE BANK.

T.C.Smith 18 MAY 2001

I.C. ESE0027.DGN

| | | |
|---|---|---|
| | TEMPORARY EQUIPMENT BRIDGE (EQUIPMENT PADS AND CULVERTS) | FIGURE #27 |
| | | DWG. ES-0027 REV. |

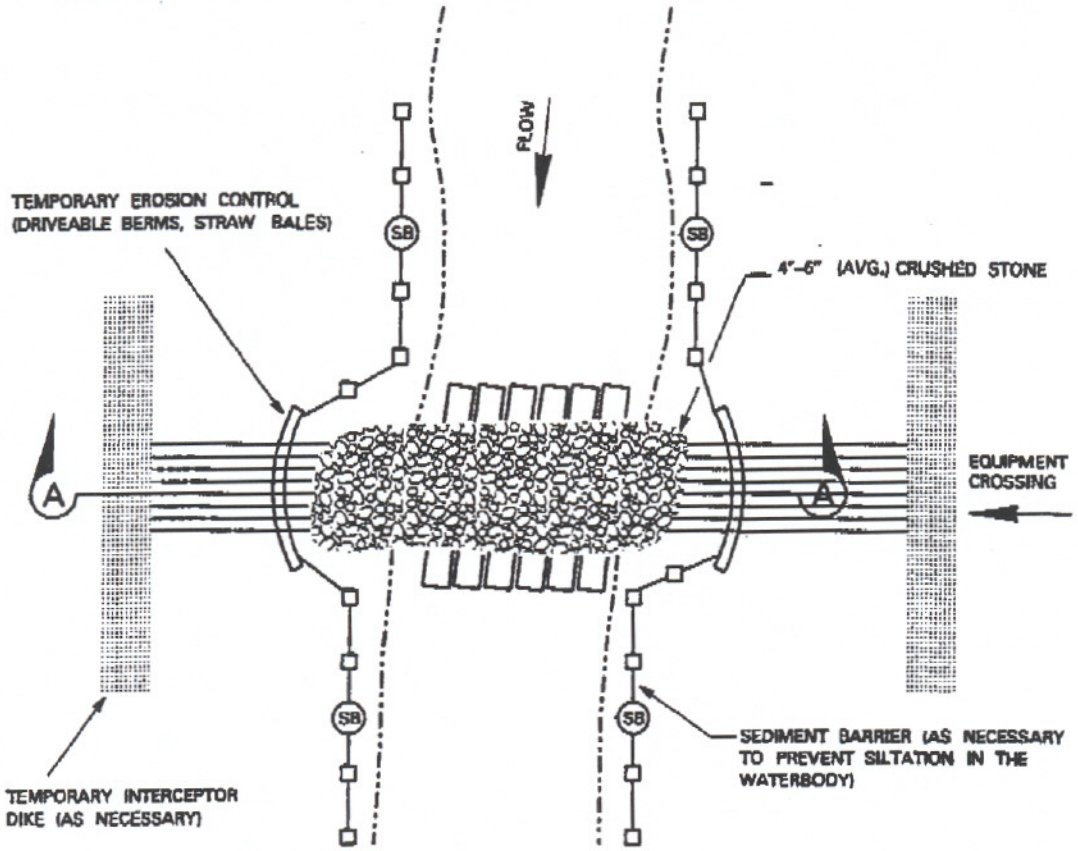


PLAN VIEW
N.T.S.

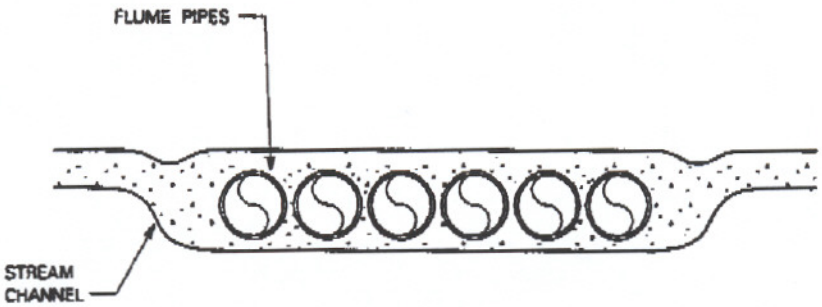


SECTION "A-A"
N.T.S.

(SB) TEMPORARY SEDIMENT BARRIER OF SILT FENCES AND /OR STRAW BALES

| | | |
|---|---|---|
| | TEMPORARY EQUIPMENT BRIDGE (CRUSHED STONE AND CULVERTS) | FIGURE #28 |
| | | DWG. ES-0028 REV. |

L.G. ESE0028.DGN 18 MAY 2001

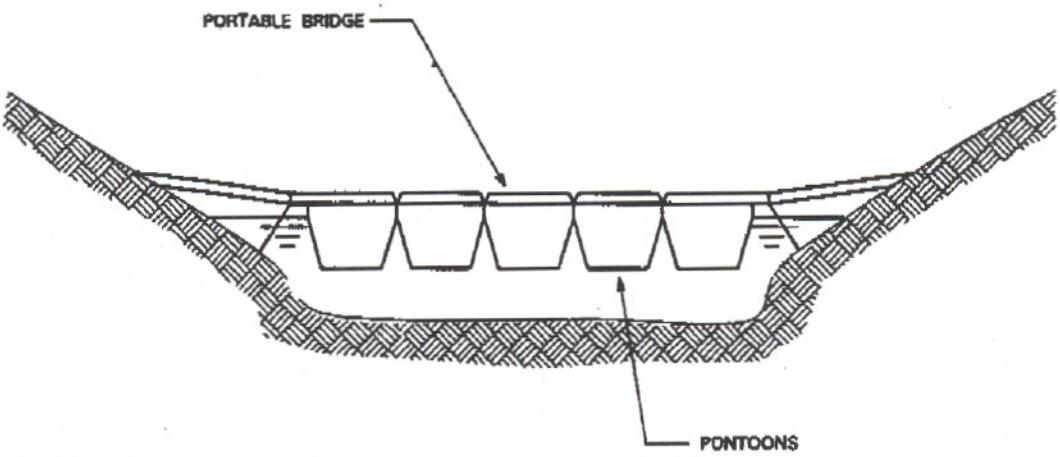


NOTES:

1. STABILIZE EDGES WITH SANDBAGS OR STONE.
2. REMOVE BRIDGE DURING CLEANUP.

T.C.Smith 18 MAY 2001

U.G. ESE0029.DGN

| | | |
|---|---|---|
| | TEMPORARY EQUIPMENT BRIDGE (FLEXI-FLOAT OR PORTABLE) | FIGURE #29 |
| | | DWG. ES-0029 REV. |

Appendix E3

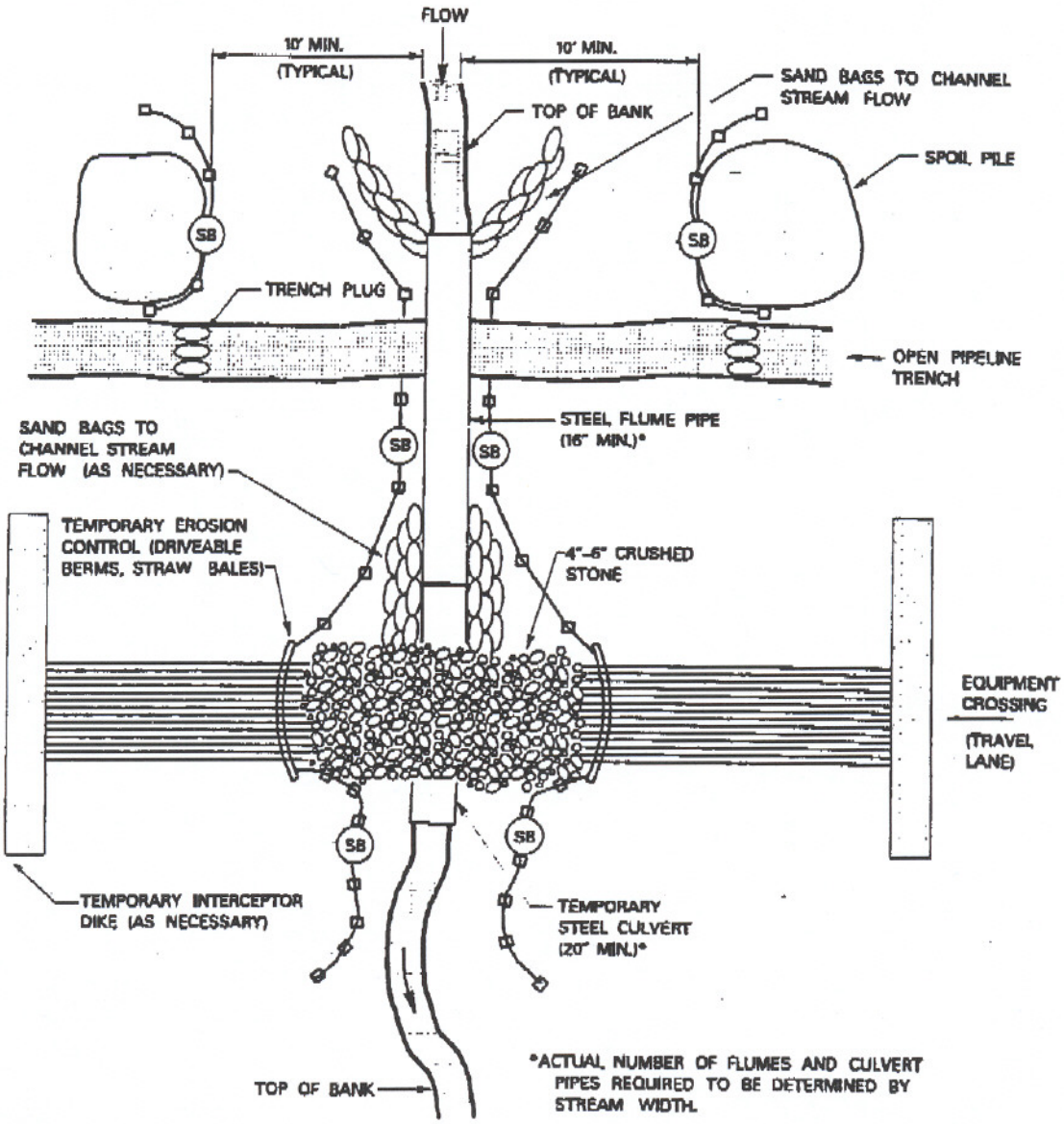


NOTES:

1. (SB) TEMPORARY SEDIMENT BARRIER OF SILT FENCE AND/OR STRAW BALES
2. SAND BAGS MUST BE FILLED WITH SAND FREE OF SILT, ORGANICS, AND OTHER MATERIAL.
3. CONDUCT ALL IN-STREAM ACTIVITY (EXCEPT BLASTING) WITH THE FLUME(S) IN PLACE. FLUME PIPE(S) MAY NOT BE REMOVED FOR LOWERING IN.
4. THE ENDS OF THE FLUME AND CULVERT MUST EXTEND TO AN UNDISTURBED AREA.

I.C. ESE0030.DGN 18 MAY 2001 ICSmith

| | | |
|---|---|---|
| | TYPICAL FLUMED CROSSING | FIGURE #30 |
| | | DWG. ES-0030 REV. |

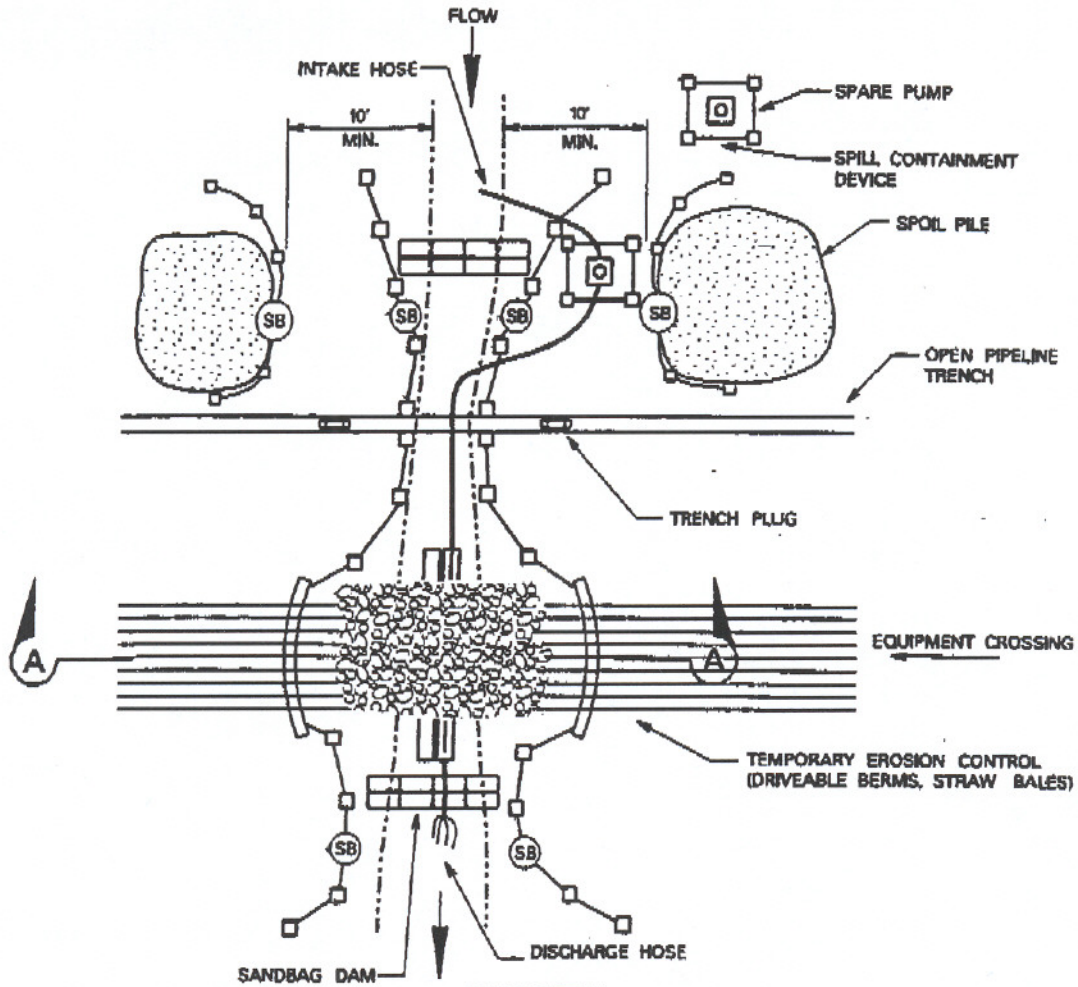


PLAN VIEW
N.T.S.

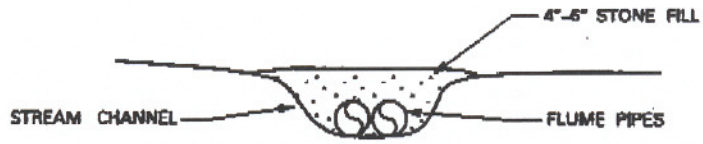


SECTION "A-A"
N.T.S.

NOTES:

1. (SB) TEMPORARY SEDIMENT BARRIER OF SILT FENCE AND/OR STRAW BALES.
2. INSTALL AND SEAL SANDBAGS UPSTREAM AND DOWNSTREAM OT THE CROSSING.
3. CREATE AN UPSTREAM SUMP USING SANDBAGS IF NATURAL SUMP IS UNAVAILABLE FOR THE INTAKE HOSE.
4. EXCAVATE ACROSS STREAM CHANNEL FOLLOWING WATER RE-ROUTING.
5. DO NOT REFUEL OR STORE FUEL WITHIN 100 FEET OF THE WATERBODY, WHERE FEASIBLE.
6. MONITOR PUMPS AT ALL TIMES DURING STREAM CROSSING PROCEDURE.
7. NUMBER OF FLUME PIPES FOR EQUIPMENT BRIDGE WILL VARY DEPENDING ON SITE CONDITIONS.

TC Smith 18 MAY 2001

I.C. ESE0031.DGN

| | | |
|---|---|---|
| | TYPICAL DAM AND PUMP CROSSING | FIGURE #31 |
| | | DWG. ES-0031 REV. |

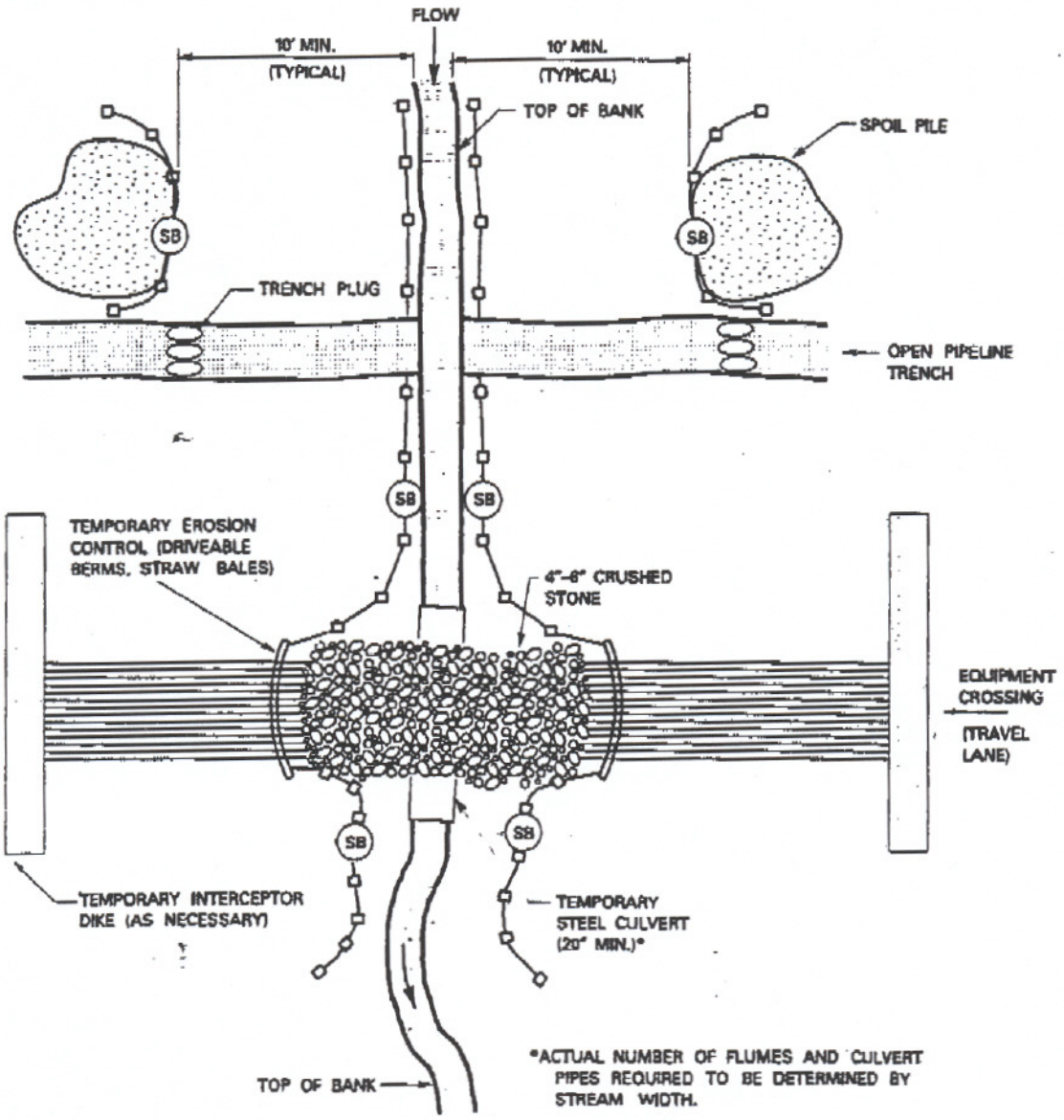


NOTES:

1. (SB) TEMPORARY SEDIMENT BARRIER OF SILT FENCE AND/OR STRAW BALES
2. FOR MINOR WATERBODIES, COMPLETE TRENCHING AND BACKFILLING IN THE WATERBODY (NOT INCLUDING BLASTING) WITHIN 24 CONTINUOUS HOURS. IF A FLUME IS INSTALLED WITHIN THE WATERBODY DURING MAINLINE ACTIVITIES, IT CAN BE REMOVED JUST PRIOR TO LOWERING IN THE PIPELINE. THE 24-HOUR TIMEFRAME STARTS AS SOON AS THE FLUME IS REMOVED.
3. FOR INTERMEDIATE WATERBODIES, COMPLETE TRENCHING AND BACKFILLING IN THE WATERBODY (NOT INCLUDING BLASTING) WITHIN 48 CONTINUOUS HOURS, IF FEASIBLE.

| | | |
|---|---|---|
| | TYPICAL WET CROSSING | FIGURE #32 |
| | | DWG. ES-0032 REV. |

ES0032.DGN 18 MAY 2001

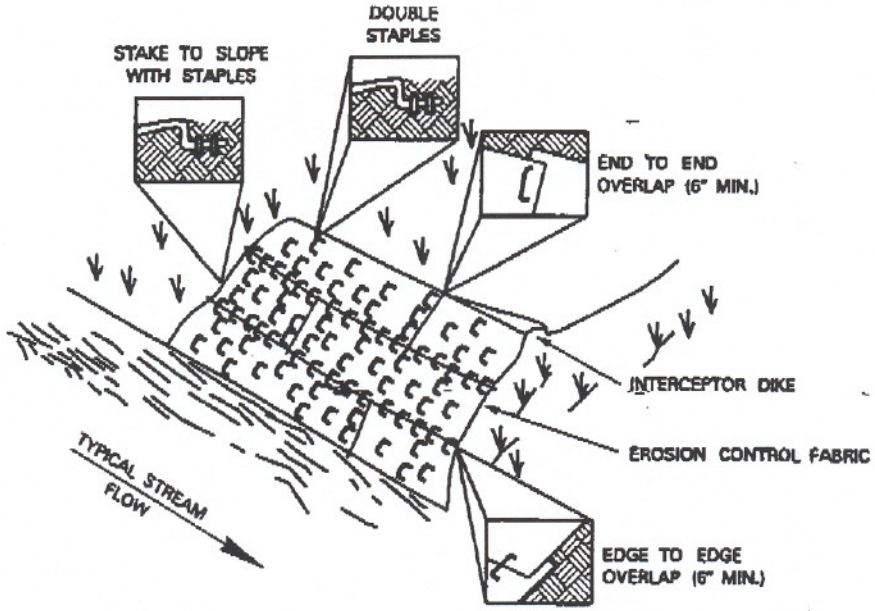


NOTES:

1. EROSION CONTROL MATTING SHALL BE PLACE ON THE BANKS OF FLOWING STREAMS WHERE VEGETATION HAS BEEN REMOVED OR AS DIRECTED BY THE ENVIRONMENTAL INSPECTOR.

2. EROSION CONTROL MATTING SHALL MEET THE REQUIREMENTS SPECIFIED IN THE PLAN AND/OR AS DIRECTED BY THE ENVIRONMENTAL INSPECTOR.

3. STAPLES SHALL BE MADE OF 11 GAUGE WIRE, U-SHAPED WITH 6" LEGS AND A 1" CROWN. STAPLES SHALL BE DRIVEN INTO THE GROUND FOR THE FULL LENGTH OF THE STAPLE LEGS. ALTERNATELY 1" WOODEN PEGS 6" LONG AND BEVELED TO SECURE MATTING.

4. MATTING SHALL BE INSTALLED ACCORDING TO MANUFACTURER SPECIFICATIONS OR AS STATED BELOW:

   - EXTEND TOP OF BLANKET 2 FEET PAST THE UPPER EDGE OF THE HIGH WATER MARK. IF AN INTERCEPTOR DIKE IS PRESENT ON THE APPROACH SLOPE, BEGIN THE BLANKET ON THE UPHILL SIDE OF THE INTERCEPTOR DIKE.
   - INSTALL BLANKET(S) ACROSS THE SLOPE IN THE DIRECTION OF THE WATER FLOW.
   - ANCHOR ("KEY") THE UPSTREAM EDGE OF THE BLANKET(S) INTO THE SLOPE USING A 6" DEEP TRENCH. DOUBLE STAPLE EVERY 12" BEFORE BACKFILLING AND COMPACTING TRENCH
   - ANCHOR (KEY") THE UPPER EDGE OF THE BLANKET INTO THE SLOPE USING A 6" DEEP TRENCH. DOUBLE STAPLE EVERY 12" BEFORE BACKFILLING AND COMPACTING TRENCH.
   - OVERLAP THE EDGES OF PARALLEL BLANKETS A MINIMUM OF 6". PLACE THE UPPER BLANKET OVER THE LOWER BLANKET (SHINGLE STYLE) AND STAPLE EVERY 12" ALONG THE LENGTH OF THE EDGE.
   - WHEN BLANKET ENDS ARE ADJOINED, PLACE THE UPSTREAM BLANKET OVER THE DOWNSTREAM BLANKET (SHINGLE STYLE) WITH APPROXIMATELY 6" OF OVERLAP AND STAPLE THROUGH THE OVERLAPPED AREA EVERY 12".
   - STAPLE DOWN THE CENTER OF THE BLANKET(S). THREE STAPLES IN EVERY SQUARE YARD.

5. IN LIVESTOCK AREAS WHERE EROSION CONTROL MATTING IS APPLIED TO THE STREAMBANKS, FENCING WILL BE USED IF NECESSARY TO EXCLUDE LIVESTOCK, WITH PERMISSION OF THE LANDOWNER.

6. MONITOR WASHOUTS, STAPLE INTEGRITY OR MAT MOVEMENT. REPLACE OR REPAIR AS NECESSARY.

| | | |
|---|---|---|
| | TYPICAL MATTING OF STREAMBANKS | FIGURE #33 |
| | | DWG. ES-0033 REV. |

I.G. ESE0033.DGN TC Smith 18 MAY 2001

# APPENDIX B

## SEED MIX RECOMMENDATIONS

# SEED MIX RECOMMENDATIONS

## *"NORTHERN ZONE"*[1]

**UPLAND AREAS**

| | |
|---|---|
| Lime | 4.0 tons/acre |
| Fertilizer | 1000 lbs./acre (10-20-20) |
| Mulch (Wheat Straw) | 3.0 tons/acre |

1. **Upland Seed Mix** — 75 lbs./acre Pure Live Seed (PLS)

| | |
|---|---|
| Kentucky Bluegrass | 20% |
| Red Fescue[2] | 20% |
| Kentucky 31 Tall Fescue[2] | 15% |
| Redtop | 10% |
| Perennial ryegrass | 20% |
| White clover | 5% |
| Birdsfoot Trefoil (Minimum 20% hard seed) | 10% |

2. **Pasture Mix** — 20 lbs./acre PLS

*(For use only in disturbed pasture areas with landowner's permission.)*

| | |
|---|---|
| Kentucky Bluegrass | 31% |
| Medium Red clover | 26% |
| Norcen Trefoil | 17% |
| Poly Perennial Rye | 26% |

3. **Recommended Seeding Dates:**

*(For the establishment of temporary or permanent vegetation.)*

| | |
|---|---|
| Spring: | March 15 - May 30 |
| Fall: | August 1 - October 15 |

**WINTER STABILIZATION**

If restoration can not occur prior to October 15, seed the ROW with 1.5 bushels per acre of winter rye or similar variety of rye as requested by the landowner. Mulch ROW at 3.0 tons per acre with wheat straw, including areas adjacent to streams and wetland crossings. Seed segregated topsoil piles with winter rye and mulch at a rate of 3.0 tons per acre.

**WETLAND AREAS**

**DO NOT USE LIME OR FERTILIZER !!!**

| | |
|---|---|
| Mulch (Wheat Straw) | 3.0 tons/acre |

1. **Wetland Seed Mix**

| | |
|---|---|
| Annual Ryegrass | 40 lbs./acre PLS |

[1] The Northern Zone is generally defined as extending north from the Northern borders of Arkansas and Tennessee.

[2] Fescue must be endophyte-free.

# SEED MIX RECOMMENDATIONS

"SOUTHERN ZONE"[1]

**UPLAND AREAS**

| | |
|---|---|
| Lime (agricultural limestone) | 2.5 tons/acre |
| Fertilizer (6-12-12) | 950 lbs./acre |
| Mulch (Oats,Wheat or Bermudagrass Straw) | 3.0 tons/acre |

1. **Seed Mixture**[2]

| | |
|---|---|
| Sorghum, Sudangrass, or Sudangrass Hybrids[3] | 40 lbs/acre Pure Live Seed (PLS) |
| Kentucky 31 Tall Fescue[4] | 10 lbs/acre PLS |
| Big Bluestem | 10 lbs/acre PLS |
| Indiangrass | 10 lbs/acre PLS |
| Bermudagrass | 10 lbs/acre PLS |
| Sericea Lespedeza[5] | 10 lbs/acre PLS |
| White Clover[5] | 5 lbs/acre PLS |
| Birdsfoot Trefoil[5] | 10 lbs/acre PLS |

2. **Recommended seeding dates:**

*(For establishment of temporary or permanent vegetation.)*

| | |
|---|---|
| Spring: | March 15 - May 30 |
| Fall: | August 1 - October 15 |

**WINTER STABILIZATION**

If restoration can not occur prior to October 15, seed the ROW with 1.5 bushels per acre of winter rye or similar variety of rye as requested by the landowner. Mulch ROW at 3.0 tons per acre with wheat straw, including areas adjacent to stream and wetland crossings. Seed segregated topsoil piles with winter rye and mulch at a rate of 3.0 tons per acre.

**WETLAND AREAS**

**DO NOT USE LIME OR FERTILIZER !!!**

| | |
|---|---|
| Mulch (Oats, Wheat, or Bermudagrass Straw) | 3.0 tons/acre |

1. **Wetland Seed Mix**:

| | |
|---|---|
| Annual Ryegrass | 40 lbs/acre PLS |

[1] The Southern Zone is generally defined as extending south from the Northern borders of Arkansas and Tennessee.

[2] An alternative seed mixture may be requested by the landowner(s).

[3] These species may be sold under the following trade names: DeKalb SX17 , Greentreat II, Greentreat III, Tastemaker DR, Tastemaker III, FFR202, or Sordan 79.

[4] Fescue must be endophyte-free.

[5] Legumes should be treated with a species specific inoculate prior to seeding. Legume seed and soil should be scarified.

# APPENDIX C

## SPILLPREVETION CONTROL AND COUNTERMEASURE (SPCC) PLAN/ PREPARDNESS, PREVENTION, AND CONTINGENCY (PPC) PLAN

# DUKE ENERGY GAS TRANSMISSION

## SPILL PREVENTION CONTROL AND COUNTERMEASURE (SPCC) PLAN/ PREPAREDNESS, PREVENTION, AND CONTINGENCY (PPC) PLAN

Prepared By:

Environmental Construction Permitting
5400 Westheimer Court, SP-777
Houston, TX 77056-5310

Effective February 18, 2003

**Table of Contents**

1.0 General Description ..... 3
2.0 Controlled Copy List of Contingency Plans ..... 3
2.1 Amendments to the Contingency Plan ..... 4
3.0 Material and Waste Inventory ..... 4
4.0 Spill And Leak Preparedness and Prevention ..... 4
4.1 Employee Training ..... 5
4.2 Security ..... 5
4.3 Prevention And Preparedness ..... 5
4.3.1 Tanks ..... 6
4.3.2 Containers ..... 6
4.3.3 Loading/Unloading Areas ..... 7
4.3.4 Concrete Coating Areas for Field Joints ..... 8
4.4 Emergency Equipment ..... 9
5.0 Contingency Plan And Emergency Procedures ..... 9
5.1 Responsibilities Of Company And Contractor Personnel ..... 9
5.1.1 First Responder ..... 9
5.1.2 Contractor EC Responsibilities ..... 10
5.1.3 Company Responsibilities ..... 10
5.1.4 Company EC Responsibilities ..... 10
5.1.5 Division Environmental Coordinator (DEC) Responsibilities ..... 11
5.1.6 Environmental Construction Permitting (ECP) Responsibilities ..... 12
5.2 Spill Clean-Up/Waste Disposal Procedures ..... 12
5.2.1 Oil/Fuel Spills ..... 12
5.2.2 Hazardous Substance Releases ..... 12
5.2.3 Unanticipated Release of Hydrostatic Test Water ..... 13
5.3 Disposal of Contaminated Materials/Soils ..... 13
5.4 Equipment Cleaning/Storage ..... 13
6.0 Housekeeping Program ..... 14
7.0 External Factors ..... 14
APPENDIX "A" - TABLES ..... 15
TABLE I - Material And Waste Inventory ..... 16
Oil and Fuel ..... 16
Commercial Chemicals ..... 16
Hazardous and Non-Hazardous Wastes ..... 16
Incompatible Materials ..... 16
Type of Temporary Containment ..... 16
TABLE II - Emergency Response And Personal Protective Equipment ..... 17
Spill Response: ..... 17
Fire Protection: ..... 17
Personnel Protection: ..... 17
TABLE III – Key Emergency Contacts ..... 18
1. Company Emergency Contacts ..... 18
2. Contractor Emergency Contact ..... 18
3. Local Authorities ..... 18
4. Environmental Agencies ..... 18

5. Potential Environmental Remedial Service Contractors ..... 18
TABLE IV - Tank And Container Storage Exception Areas ..... 20
TABLE V – Project Site Specific Security Information ..... 21
TABLE VI – Areas for Potential Leaks and Spills ..... 22
APPENDIX "B" - MSDS SHEETS ..... 23

## 1.0 General Description

Duke Energy Gas Transmission (Company) has prepared a Spill Prevention Control and Countermeasure (SPCC) Plan which incorporates the Preparedness, Prevention, and Contingency (PPC) Plan, as well as emergency provisions. The Company's overall objective is to develop a functional contingency plan that meets all applicable federal, state, and local emergency response programs. This plan is designed to minimize hazards to human health and/or the environment from any unplanned sudden or non-sudden releases of oils, toxic, hazardous, or other polluting materials to the air, soil, surface water or groundwater. This plan also addresses unanticipated release of hydrostatic test water, especially in areas where the pipelines have been treated with mercaptan and in areas of known PCB contamination.

The Company's objective is to develop a functional contingency plan to be used on pipeline construction projects in accordance with all federal, state, and local emergency response programs. This plan was prepared to meet the requirements of the:

- Federal Water Pollution Control Act
- Comprehensive Environmental Response, Compensation, and Liability Act of 1980
- Resource Conservation and Recovery Act
- Toxic Substances Control Act

This plan identifies:

- Type and quantity of material handled
- Measures taken for spill preparedness and prevention
- Company and Contractor emergency response procedures
- Responsibilities of designated emergency coordinators
- Emergency Evacuation Plan
- Spill incident reporting procedures
- Arrangements with local emergency response teams

## 2.0 Controlled Copy List of Contingency Plans

The Environmental Construction Permitting (ECP) group in Engineering Services is responsible for the accuracy of the plan related to regulatory issues, coordination and distribution of the plan, and the preparation of any necessary revisions to the plan.

A copy of the contingency plan and any revisions will be:

- Maintained at the construction field office
- Maintained by Company Emergency Coordinator (EC)
- Distributed by ECP to the engineering teams and to the transmission field offices
- Distributed by the engineering teams to the appropriate local representatives

The controlled copy list of holders of the contingency plan representing the primary response units includes:

| Department | Location |
|---|---|
| Environmental Construction Permitting | Houston |
| Houston Environment, Health & Safety (Houston EHS) | Houston |
| Engineering (Project Team Director) | Various |
| Transmission (Director, Technical Services) | Houston |
| Transmission - Division Environmental Coordinator (DEC) | Division Office |
| Transmission (Area Superintendent) | Area Office |
| Police Department | Local |
| Fire Department | Local |
| Hospital | Local |
| Emergency Medical Team | Local |

### 2.1 Amendments to the Contingency Plan

The contingency plan will be amended when one of the following occurs:

- Plan proves to be ineffective in an emergency
- Material and waste inventory needs updating
- Changes to Federal or State regulations
- Changes to Local regulations where applicable

At least once every five years there will be a review, evaluation, and re-certification of the plan to be coordinated by the Manager of ECP. Portions of this plan not affecting the overall scope or design may be changed without re-certification.

## 3.0 Material and Waste Inventory

The Material and Waste Inventory (Appendix A, Table I) will be completed by the Contractor prior to construction. This table provides a list of chemicals used or stored at the site that have the potential of causing environmental degradation or endangerment of public health and safety through accidental releases. This list includes nutrients, such as fertilizers and sanitary wastes; solid waste, such as scrap metals, masonry products and other construction raw materials and debris; construction chemicals, such as paints, soil additives and acids for cleaning; petroleum products, such as fuels and lubricants; and other materials including concrete wash from mixers, explosives, etc.

Material Safety Data Sheets for all hazardous substances listed in Table I will be included in Appendix A and are to be provided by the contractor. Other potential waste from this site, not included in Table I, would include construction debris, rock and excess soil.

## 4.0 Spill and Leak Preparedness and Prevention

The purpose of this section is to demonstrate that the construction site is adequately equipped to meet preparedness and prevention requirements, as required under the Hazardous Waste Management Regulations.

### 4.1 Employee Training

Contractors and company personnel are to be trained in hazardous waste management procedures that will enable them to respond effectively to emergencies by familiarizing them with emergency procedures, emergency equipment, and emergency communication systems. Personnel who handle, sample, or come in direct contact with oils or hazardous matter are to undergo basic training stressing the importance of pollution control. Spill prevention control procedures are to be thoroughly explained during the training briefings which will be conducted by the Contractor Superintendent (Contractor Emergency Coordinator) and the Company Chief Inspector (Company Emergency Coordinator) or their designated representative on the job site. The Company Emergency Coordinator (EC) is responsible for maintaining verification of the training.

Before construction, all project Chief Inspectors and Environmental Inspectors will receive a copy of this SPCC Plan and an approved list of emergency response contractors (see Table III). Inspectors will be trained regarding equipment maintenance, fuel and hazardous material handling, spill prevention procedures and spill response, as specified herein.

All personnel involved in the construction of the proposed facilities will be aware of the SPCC/PPC Plan. Regular training briefings will be conducted on an as required basis by the Contractor Superintendent and the Company Chief Inspector on the job site. These briefings shall include the following:

- Precautionary measures to prevent spills
- Potential sources of spills, including equipment failure or malfunction
- Standard operating procedures in the event of a spill
- Applicable notification requirements
- Equipment, materials and supplies available for clean-up of a spill

### 4.2 Security

Note: Include project site specific security information here (see Appendix A, Table V).

Hazardous wastes and waste containing PCBs greater than 50 ppm will be stored in a secured location (i.e. fenced, locked, etc.). Fuel storage areas will be located to minimize, as much as possible, tampering by unauthorized personnel during non-operational hours.

### 4.3 Prevention and Preparedness

It is unlikely that a discharge from the construction site into waters of the state will occur. The construction site should have onsite spill prevention and control facilities, as well as routine inspections of tank and container storage areas that help reduce the potential for oil and hazardous material releases to the soil or surface waters. In areas where hazardous materials are required to be stored or utilized within a wetland, the contractor is required to prepare and submit for approval a secondary containment plan prior to working in the wetland area.

Generally, minor spills or leaks will be contained within secondary containment areas. Areas where potential spills and leaks may occur are listed in Appendix A, Table VI (listing to be completed by Company EC).

### 4.3.1 Tanks

The Contractor will take the following precautions to prevent a spill from occurring within tank storage areas:

- Operate only those tanks for fuel and material storage, which meet the approval of the Company;
- Single wall tanks shall be provided with temporary secondary containment that will hold at least 110% of the tank capacity of the largest tank inside the containment area;
- Remove any precipitation from the containment area to maintain the available containment volume at 110% of the volume of material stored. Inspect the precipitation first for evidence of oil, including a sheen, or other contaminants. If a sheen or other indicators of oil or contamination is present, collect the material for proper disposal off-site;
- Use only self-supporting tanks constructed of carbon steel or other materials compatible with the contents of each tank;
- PCB (50 ppm or greater) storage tanks shall be double-walled or have secondary containment that will hold 200% capacity of the tank;
- Elevate tanks a maximum of two (2) feet above grade;
- Tank storage shall be located in areas that are at least 100 feet from all water-bodies, wetlands, and designated municipal watershed areas, with certain exceptions as approved ECP and EHS and listed in Appendix A, Table IV;
- All tanks shall be inspected daily for leaks and deterioration by the Contractor EC or designee. The results of all inspections shall be recorded on the "Inspection Log" (Houston EHS SOP Form # 19-18). Copies of form 19-18 for unsatisfactory storage area inspections are to be distributed to Houston EHS and the project manager. Leaking and/or deteriorated tanks shall be repaired or replaced as soon as the condition is first detected;
- Keep tanks and secondary containment drains closed when not in use;
- Ensure vehicle mounted tanks are equipped with flame/spark arrestors on all vents to prevent self ignition;
- Do not store incompatible materials in sequence in tanks prior to decontamination. (A general list of potentially incompatible materials that may be used during construction are included in Appendix A, Table I);
- Decontaminate tanks used to store hazardous materials prior to use at a different construction location if there is the potential to contaminate the next material to be placed in the tank. The tanks should always be decontaminated if they are to be returned to a vendor. The tanks should also be decontaminated if they are being returned a Company yard and no immediate specific same service use is scheduled;
- If a tank contains a Hazardous Material, then transportation should follow the steps outlined in Environmental SOP Chapter 4 – Waste Transportation.

### 4.3.2 Containers

The Contractor will take the following precautions to prevent a spill from occurring within container storage areas:

- For drum storage, reference Environmental SOP 3-D (Drum Specifications) and Appendix B of the SOP's (explanation of DOT Drum Markings). Company EC is to have a copy of the current Environmental SOP's;
- Ensure containers remain closed when not in use;
- All containers with a storage capacity of greater than 55 gallons shall have temporary containment (see Appendix A, Table I for type of temporary containment);
- Small cans of gasoline, diesel, solvents, etc., should be stored within the temporary containment or within secured trailers or vehicles when not in use;
- Do not store incompatible materials in sequence in containers prior to decontamination. (A general list of potentially incompatible materials that may be used during construction are included in Appendix A, Table I);
- Decontaminate containers used to store hazardous materials prior to use at a different construction location if there is the potential to contaminate the next material to be placed in the container. The containers should always be decontaminated if they are to be returned to a vendor. The containers should also be decontaminated if they are being returned a Company yard and no immediate specific same service use is scheduled;
- If a container contains a Hazardous Material, then transportation should follow the steps outlined in Environmental SOP Chapter 4 – Waste Transportation;
- No incompatible material shall be stored together in the same containment area;
- Leaking and/or deteriorated containers shall be replaced as soon as the condition is first detected;
- Container storage shall be located in areas that are at least 100 feet from all water-bodies, wetlands, and designated municipal watershed areas, with certain exceptions as approved ECP and EHS and listed in Appendix A, Table IV;
- All container storage and containment areas being used to store waste or products shall be per the guidelines described in SOP-10, Facility Inspections.

### 4.3.3 Loading/Unloading Areas

The Contractor will take the below listed precautions to prevent a spill from occurring within loading and unloading areas when those areas are located at the construction site. Company personnel shall be present during loading and unloading activities.

- Transferring of liquids and refueling shall only occur in pre-designated and pre-approved locations that are at least 100 feet from all water-bodies and wetlands. Exceptions may be approved by the Environmental Inspector if no reasonable alternatives are available and secondary containment is used. Certain exceptions are listed in Appendix A;
- All loading/unloading areas will be closely monitored to prevent any leaks and spills;
- The area beneath loading/unloading location shall be inspected for spills before and after each use;
- All hose connections shall utilize drip pans at the hose connections while loading/unloading liquids. If a leak or spill occurs, the loading/unloading operation will be stopped and the spill will be contained, cleaned up and collected prior to continuing the operation;

- All outlets of the tank trucks shall be inspected prior to leaving the loading and unloading area to prevent possible leakage from the truck while in transit;
- Each refueling vehicle shall have a sufficient number of shovels, brooms, 10 mil polyethylene sheeting, and fire protection equipment to contain a moderate oil/fuel spill;
- Any service vehicle used to transport lubricants and fuel must be equipped with an emergency response kit. At a minimum, this kit must include:
  - 25 lbs of granular oil absorbent
  - 10, 48" x 3" oil socks
  - 5, 17" x 17" oil pillows
  - 1, 10" x 4" oil boom
  - 20, 24" x 24" x 3/8" oil mats
  - Garden size, 6 mil, polyethylene bags
  - 10 pair of latex gloves
  - 1, 55-gallon polyethylene open-head drum;

  In addition, a smaller chemical response kit shall be available which contains:
  - 1 bag of loose chemical pulp
  - 2 to 3, 17" x 17" chemical pillows
  - 2, 48" x 3" chemical socks
  - 5, 18" x 18" x 3/8" adsorbent mats
  - garden-size, 6 mil, polyethylene bags
  - 10 pair of latex gloves,
  - 1, 30-gallon polyethylene open-head drum
  - hazardous waste labels.

### 4.3.4 Concrete Coating Areas for Field Joints

Concrete coating of field joints shall be performed at least 100 feet from the edge of all water-bodies; Where topographic conditions and/or work space limitations necessitate application of concrete coating within 100 feet of a water-body, sufficient containment measures shall be implemented so as to eliminate the spill of any concrete coating materials into a wetland or waterbody. Containment such as the following (or equivalent as approved by Company EC in a secondary containment plan to be submitted by the Contractor) shall be used:

- Concrete coating materials shall be temporarily stored in an earthen berm with a polyethylene underling lining of 10 mil thickness, or in a portable containment tray constructed of steel plate measuring a minimum of four (4) feet square by one (1) foot deep;
- Portable-mechanical mixing equipment, if required, shall be operated within a containment area constructed of temporary earthen berms and polyethylene underling lining a minimum of 10 mil thickness;
- Manual mixing of concrete materials in a portable container (such as a 55 gallon drum cut in half, or equivalent) shall be performed within an earthen berm with polyethylene underling lining of 10 mil thickness, or within a portable containment tray constructed of steel plate, measuring a minimum of four (4) feet square by one (1) foot deep.

### 4.4 Emergency Equipment

The construction site/contractor ware yard will have adequate manpower and equipment necessary to divert any spill from reaching water bodies and wetland areas. Emergency equipment shall include, but is not limited to shovels, backhoes, dozers, front-end loaders, oil absorbent booms, pillows, socks and/or mats, granular oil absorbent and chemical absorbent pulp. A list of emergency response equipment and personal protective equipment is provided in Appendix A, Table II.

## 5.0 Contingency Plan and Emergency Procedures

Emergency response procedures have been developed for this construction project to provide guidance in responding to fires, explosions, oils or hazardous waste, or hazardous waste constituents to the air, land or waters of the state regardless of the quantity involved in the incident.

For unanticipated release of hydrostatic test waters, the company will utilize Best Management Practices, as described in the Company Erosion and Sediment Control Plan as soon as possible after the release.

### 5.1 Responsibilities Of Company And Contractor Personnel

The Contractor and Company on-site personnel have responsibilities for spill prevention, control and countermeasures. For some projects, as specified by the Company, a Company Area Field Construction Office, staffed with appropriate environmental compliance personnel, will perform the ECP responsibilities.

If notification is given that an evacuation is necessary, all personnel will evacuate the construction area via the primary evacuation route (site specific map with evacuation route to be attached for plant projects) and await further instructions from the EC. If direct access to the primary evacuation route is restricted by fire, spill, smoke, or vapor, facility personnel will evacuate the facility via alternate evacuation routes to the nearest accessible open area.

#### 5.1.1 First Responder

Any individual who first observes a spill or any other imminent or actual emergency situation will take the following steps:

- Assess the situation to determine if the situation poses an immediate threat to human health or the environment.
- Identify hazardous substances involved, if any.
- Report the emergency or spill to the Company and Contractor EC(s) immediately.
- Standby at a safe distance and keep others away.
- Activate emergency shutdown, if necessary.

The Contractor Superintendent will act as the EC for the Contractor. The Chief Inspector will act as the EC for the Company. The responsibilities of the EC will be as follows:

### 5.1.2 Contractor EC Responsibilities

The Contractor EC will coordinate the response to all spills which occur as a result of Contractor operations. The Contractor will not coordinate the response of spills of pipeline liquids, hazardous wastes, or the unanticipated release of hydrostatic test waters, these spills will be coordinated by the Company EC.

Contractor EC Responsibilities:

- Determine any immediate threat to human health, the environment, and the neighboring community;
- Ensure personnel safety and evacuate if necessary.
- Identify source, character, amount, and extent of release;
- Determine if hazardous substances are involved;
- Inform the Company EC and follow instructions;
- Direct and document remediation efforts to contain and control spill release;
- Document remedial efforts;
- Coordinate cleaning and disposal activities;

### 5.1.3 Company Responsibilities

The Company EC will be responsible for coordinating the clean up of all spills of pipeline liquids, hazardous wastes, and any unanticipated release of hydrostatic test water.

### 5.1.4 Company EC Responsibilities

Upon notification of pipeline liquid spills, hazardous materials spills, or the unanticipated release of hydrostatic test waters:

- Assess situation for potential threat to human health, environment and the neighboring community;
- Implement evacuation, if necessary;
- Activate emergency shutdown, if necessary;
- Ensure personnel safety;
- Control source as conditions warrant;
- Notify immediately the Emergency Spill Hotline at 1-800-735-6364 (select the appropriate transmission division) and those listed in Appendix A, Table III immediately for spills that meet the following criteria:
    a. one (1) pound or more of a solid material (excluding HDD mud) spilled on land
    b. five (5) gallons or more of a liquid spilled on land
    c. creates a sheen on water
    d. unanticipated release of hydrostatic test water;
- If necessary, notify the local fire department, law enforcement authority, or health authority as appropriate. The following information should be provided:
    a. name of the caller and callback number
    b. the exact location and nature of the incident

c. the extent of personnel injuries and damage
d. the extent of release
e. the material involved, and appropriate safety information;

- Ensure that waste or product which may be incompatible with a released material is kept away from the affected area;
- Keep any potential ignition source away from emergency area, if spilled material is flammable;
- Minimize affected area with appropriate containment or diking;
- Assemble required spill response equipment as required (protective clothing, gear, heavy equipment, pumps, absorbent material, empty drums, etc.)
- Place spilled material in appropriate containers, in accordance with the Environment Standard Operating Procedures;
- Label and store containers in accordance with the Environmental Standard Operating Procedures;
- Coordinate waste disposal and equipment decontamination with Houston EHS;
- Terminate response;
- Ensure that all emergency response equipment is fully functional. Any equipment that cannot be reused shall be replaced;
- For spills of PCB's, contact Houston EHS for special spill response requirements related to PCB spills;
- Assist with the coordination of cleanup and disposal activities as described in Sections 5.2, 5.3 and 5.4;
- If necessary, contact outside remediation services, in coordination with Houston EHS, to assist with clean up;
- Complete Waste Removal Storage and Disposal Record Form (WRSDR and WDR Forms to be obtained from Houston EHS) to track waste generated during this project;
- Complete Field Spill Report (Environmental SOP 19-6) and distribute accordingly;
- For unanticipated release of hydrostatic test waters, notify state contact if required by state permit in accordance with timeframes required by state permit;
- When required by permit, arrange for immediate sampling of the test water (from the pipe or a representative sample of released water where possible), or soil where the test water was released, and water from adjacent water-body if test water was released into the water-body. Analysis of the samples will be in accordance with hydrostatic test discharge permit criteria plus, where applicable, mercaptans;
- Local Right of Way agent will notify township manager and/or mayor.

### 5.1.5 Division Environmental Coordinator (DEC) Responsibilities

- Provide technical assistance on spill cleanup procedures
- Determine if the release requires reporting to non-project specific regulatory agencies
- Provide written and verbal reports to the above regulatory agencies
- Contact outside remediation services through consultation with Houston EHS

- Coordinate with Houston EHS and arrange for the transport of hazardous waste and waste containing PCB's
- Coordinate with ECP relative to any project specific permit requirements

### 5.1.6 Environmental Construction Permitting (ECP) Responsibilities

- Determine if the release requires reporting to any project specific permitting agencies
- Provide written and verbal reports as required
- Coordinate with DEC

## 5.2 Spill Clean-Up/Waste Disposal Procedures

The following identifies the clean-up and control measures to be utilized in the event of a spill of oil, fuel or a hazardous substance or unanticipated release of hydrostatic test water.

### 5.2.1 Oil/Fuel Spills

- Ensure no immediate threat to surrounding landowners or environment;
- Remediate small spills and leaks as soon as feasible. Use adsorbent pads whenever possible to reduce the amount of contaminated articles;
- Restrict the spill by stopping or diverting flow to the oil/fuel tank;
- If the release exceeds the containment system capacity, immediately construct additional containment using sandbags or fill material. Every effort must be made to prevent the seepage of oil into soils and waterways;
- If a release occurs into a facility drain or nearby stream, immediately pump any floating layer into drums. For high velocity streams, place oil booms or hay bales between the release area and the site boundary and downstream of affected area. As soon as possible, excavate contaminated soils and sediments;
- After all recoverable oil has been collected and drummed, place contaminated soils and articles in containers;
- For larger quantities of soils, construct temporary waste piles using plastic liners placing the contaminated soils on top of the plastic and covered by plastic. Plastic-lined roll-off bins should be leased for storing this material as soon as feasible;
- Label the drum following the procedures outlined in the Company's Environmental Procedures Manual;
- Move drum to secure staging or storage area;
- Document and report cleanup activities to the Company EC as soon as feasible.
- If environmentally sensitive resources (wetlands, water-bodies) exist in the area, ensure that Best Management Practices as described in Company's E&SCP are utilized to minimize impact to these resources;

### 5.2.2 Hazardous Substance Releases

- Ensure no immediate threat to surrounding landowners or environment;
- Identify the material and quantity released;
- Block off drains and containment areas to limit the extent of the spill. Never wash down a spill with water;

- Ensure that Personal Protective Equipment and containers are compatible with the substance;
- Collect and reclaim as much of the spill as possible using a hand pump or similar device. Containerize contaminated soils in an appropriate DOT container in accordance with the Company's Environmental Standard Operating Procedures Manual. (Note: Environmental SOP's are located in all division and area offices and kept by all engineering teams.) Never place incompatible materials in the same drum;
- Sample the substance for analysis and waste profiling, according to instructions from the Houston EHS;
- Decontaminate all equipment in a contained area and collect fluids in drums;
- Label the drum following Houston EHS SOP's;
- Move the drum to secure staging or storage area;
- Document and report activities to Houston EHS as soon as feasible.
- If environmentally sensitive resources (wetlands, water-bodies) exist in the area, ensure that Best Management Practices as described in Company's E&SCP are utilized to minimize impact to these resources;

### 5.2.3 Unanticipated Release of Hydrostatic Test Water

- Ensure no immediate threat to surrounding landowners or environment;
- If environmentally sensitive resources (wetlands, water-bodies) exist in the area, ensure that Best Management Practices as described in Company's E&SCP are utilized to minimize impact to these resources;

## 5.3 Disposal of Contaminated Materials/Soils

- The Contractor shall work with the Houston EHS to characterize waste generated during this project. All wastes generated, as a result of spill response activities will be analyzed to determine if hazardous, or if PCBs are greater than 1 ppm. Knowledge of the contaminant(s) may be applied to classify the waste/spill materials as determined by Houston EHS;
- The Contractor is responsible for the proper disposal of wastes generated during this project that is determined by Houston EHS to be non-hazardous and to contain PCBs less than 1 ppm. This includes obtaining applicable authorizations and registrations per Environmental SOP 1-D-3 for waste disposal;
- Houston EHS is responsible for the proper disposal of hazardous wastes and PCB wastes containing PCBs greater than 1 ppm generated during this project, including obtaining applicable EPA Identification Numbers;
- Hazardous wastes and waste containing PCBs shall be stored in a secured location (i.e. fenced, locked, etc.) until such time as this material is transported off-site. At no time will hazardous waste be stored for a period exceeding 90 days nor a waste with PCBs greater than 50 ppm be stored for a period exceeding 30 days.

## 5.4 Equipment Cleaning/Storage

- Upon completion of remedial activities, the Contractor shall be responsible for decontaminating emergency response equipment used to remediate a spill resulting from

their operations. The Company will be responsible if the spill is hazardous material, pipeline liquids, or hydrostatic test water;

- Waste disposal for any contaminated waste generated as a result of the decontamination process shall be the responsibility of Houston EHS.
- The Contractor shall be responsible for replacing all spent emergency response equipment prior to resuming construction activities if spill resulted from their operations;
- Reusable personal protective equipment shall be tested and inventoried by the Contractor prior to being placed back into service;

## 6.0 Housekeeping Program

The construction area will be maintained in a neat and orderly manner. Solid wastes, such as food wrappings, cigarette butts and packets, styrofoam cups and plates, and similar wastes will be disposed of off-site, not in the construction excavation area. Any spills or leaks will be cleaned up as expeditiously as possible. Trash will be routinely collected for off-site disposal. Container storage areas will be maintained in a neat and orderly manner.

## 7.0 External Factors

There will be no direct effect on the construction site due to a power outage or snowstorm. In the event of a flood or strike, all tanks and containers would be removed from the right-of-way and placed in a secure area.

# APPENDIX "A" - TABLES

**TABLE I - Material And Waste Inventory**

Oil and Fuel to be used or stored on site during construction:

Commercial Chemicals to be used or stored on site during construction:

Hazardous and Non-Hazardous Wastes to be used or stored on site during construction:

Incompatible Materials to be used or stored on site during construction:

Type of Temporary Containment containers to be used:

| TABLE I TO BE COMPLETED BY CONTRACTOR |
|---|

TABLE II - Emergency Response And Personal Protective Equipment

**Spill Response:**

| Equipment | Quantity | Location |
|---|---|---|
| | | |
| | | |
| | | |
| | | |
| | | |

**Fire Protection:**

| Equipment | Quantity | Location |
|---|---|---|
| | | |
| | | |
| | | |
| | | |

**Personnel Protection:**

| Equipment | Quantity | Location |
|---|---|---|
| | | |
| | | |
| | | |
| | | |

TABLE II TO BE COMPLETED BY CONTRACTOR EC

**TABLE III – Key Emergency Contacts**

The list of key personnel who will be contacted in the event of an emergency or spill incident include the following:

| | | Contact Name | Phone Number |
|---|---|---|---|
| 1. | **Company Emergency Contacts** | | |
| | 1. Company Emergency Coordinator (within 15 minutes of incident) | | |
| | 2. 24-hour spill emergency hotline (DEC Name and Division) (within 15 minutes of incident) | | 1-800-735-6364 |
| | 3. Project Manager | | |
| | 4. Project Environmental Lead (PEL) (within 60 minutes of incident) | | |
| | 5. Field Construction (Houston Office) | | |
| 2. | **Contractor Emergency Contact** | | |
| | 1. Contractor Emergency Coordinator | | |

3. **Local Authorities – As necessary**

| Department | Number |
|---|---|
| State Police | |
| Local Police | |
| Local Fire Department | |
| Hospital | |
| Ambulance | |

4. **Environmental Agencies**

Notification to be made by DEC and PEL representative

5. **Potential Environmental Remedial Service Contractors** (verify prior to issuing project specific SPCC Plan)

Clean Harbors Environmental Services, Inc. -Howard Alexander (800) 782-8805

Safety-Kleen (FS), Inc. Edward A. Mitchell (281) 478-7700

U. S. A. Environment - Cesar Garcia (713) 425-6925 or cell phone (832) 473-5354

WRS Infrastructure and Environment Inc. Steve Maxwell Cell phone 281 731-0886

## TABLE III TO BE COMPLETED BY COMPANY EC

**TABLE IV - Tank And Container Storage Exception Areas**

(Tank and container storage shall be located in areas that are at least 100 feet from all water-bodies and wetlands).

The below exceptions have been approved by ECP and EHS.

1.

2.

3.

4.

**TABLE V – Project Site Specific Security Information**

**TABLE VI – Areas for Potential Leaks and Spills**

1.

2.

3.

4.

# APPENDIX "B" - MSDS SHEETS

# Appendix E4

## Iroquois MarketAccess Project

## Iroquois has adopted:

- **FERC Upland Erosion and Revegetation Plan and**
- **FERC Wetland and Waterbody Construction and Mitigation Procedures**
- **Iroquois Spill Prevention, Containment, and Counter Measures**

# WETLAND AND WATERBODY CONSTRUCTION AND MITIGATION PROCEDURES

01/17/2003 VERSION

# WETLAND AND WATERBODY CONSTRUCTION AND MITIGATION PROCEDURES

TABLE OF CONTENTS


I. APPLICABILITY ..... 1

II. PRECONSTRUCTION FILING ..... 2

III. ENVIRONMENTAL INSPECTORS ..... 3

IV. PRECONSTRUCTION PLANNING ..... 3

V. WATERBODY CROSSINGS ..... 5
- A. NOTIFICATION PROCEDURES AND PERMITS ..... 5
- B. INSTALLATION ..... 6
  - 1. Time Window for Construction ..... 6
  - 2. Extra Work Areas ..... 6
  - 3. General Crossing Procedures ..... 6
  - 4. Spoil Pile Placement and Control ..... 7
  - 5. Equipment Bridges ..... 7
  - 6. Dry-Ditch Crossing Methods ..... 8
  - 7. Crossings of Minor Waterbodies ..... 10
  - 8. Crossings of Intermediate Waterbodies ..... 11
  - 9. Crossings of Major Waterbodies ..... 11
  - 10. Temporary Erosion and Sediment Control ..... 12
  - 11. Trench Dewatering ..... 12
- C. RESTORATION ..... 13
- D. POST-CONSTRUCTION MAINTENANCE ..... 14

VI. WETLAND CROSSINGS ..... 14
- A. GENERAL ..... 14
- B. INSTALLATION ..... 16
  - 1. Extra Work Areas and Access Roads ..... 16
  - 2. Crossing Procedures ..... 17
  - 3. Temporary Sediment Control ..... 19
  - 4. Trench Dewatering ..... 19
- C. RESTORATION ..... 20
- D. POST-CONSTRUCTION MAINTENANCE ..... 21

VII. HYDROSTATIC TESTING ..... 22
- A. NOTIFICATION PROCEDURES AND PERMITS ..... 22
- B. GENERAL ..... 22
- C. INTAKE SOURCE AND RATE ..... 22
- D. DISCHARGE LOCATION, METHOD, AND RATE ..... 23


01/17/2003 VERSION

# WETLAND AND WATERBODY CONSTRUCTION AND MITIGATION PROCEDURES (PROCEDURES)

## I. APPLICABILITY

A. The intent of these Procedures is to assist applicants by identifying baseline mitigation measures for minimizing the extent and duration of project-related disturbance on wetlands and waterbodies. The project sponsors should specify in their applications for a FERC Certificate (Certificate) any individual measures in these Procedures they consider unnecessary, technically infeasible, or unsuitable due to local conditions and to fully describe any alternative measures they would use. Applicants should also explain how those alternative measures would achieve a comparable level of mitigation.

Once a project is certificated, further changes can be approved. Any such changes from the measures in these Procedures (or the applicant's approved procedures) will be approved by the Director of the Office of Energy Projects (Director), upon the applicant's written request, if the Director agrees that an alternative measure:

1. provides equal or better environmental protection;

2. is necessary because a portion of these Procedures is infeasible or unworkable based on project-specific conditions; or

3. is specifically required in writing by another Federal, state, or Native American land management agency for the portion of the project on its land or under its jurisdiction.

Any requirements in these Procedures to file material with the Secretary of the FERC (Secretary) do not apply to projects undertaken under the provisions of the blanket certificate program. This exemption does not apply to a request for alternative measures.

Project-related impacts on non-wetland areas are addressed in the staff's Upland Erosion Control, Revegetation, and Maintenance Plan (Plan).

B. DEFINITIONS

1. "Waterbody" includes any natural or artificial stream, river, or drainage with perceptible flow at the time of crossing, and other permanent waterbodies such as ponds and lakes:

   a. "minor waterbody" includes all waterbodies less than or equal to 10 feet wide at the water's edge at the time of crossing;

   b. "intermediate waterbody" includes all waterbodies greater than 10 feet wide but less than or equal to 100 feet wide at the water's edge at the time of crossing; and

   c. "major waterbody" includes all waterbodies greater than 100 feet wide at the water's edge at the time of crossing.

2. "Wetland" includes any area that is not in actively cultivated or rotated cropland and that satisfies the requirements of the current Federal methodology for identifying and delineating wetlands.

II. PRECONSTRUCTION FILING

A. The following information shall be filed with the Secretary prior to the beginning of construction:

1. the hydrostatic testing information specified in section VII.B.3. and a wetland delineation report as described in section VI.A.1., if applicable; and

2. a schedule identifying when trenching or blasting would occur within each waterbody greater than 10 feet wide, or within any designated coldwater fishery. The project sponsor shall revise the schedule as necessary to provide FERC staff at least 14 days advance notice. Changes within this last 14-day period must provide for at least 48 hours advance notice.

B. The following site-specific construction plans required by these Procedures must be filed with the Secretary for the review and written approval by the Director:

1. plans for extra work areas that would be closer than 50 feet from a waterbody or wetland;

2. plans for major waterbody crossings;

3. plans for the use of a construction right-of-way greater than 75 feet wide in wetlands; and

4. plans for horizontal directional drill (HDD) "crossings" of wetlands or waterbodies.

III. ENVIRONMENTAL INSPECTORS

A. At least one Environmental Inspector having knowledge of the wetland and waterbody conditions in the project area is required for each construction spread. The number and experience of Environmental Inspectors assigned to each construction spread should be appropriate for the length of the construction spread and the number/significance of resources affected.

B. The Environmental Inspector's responsibilities are outlined in the Upland Erosion Control, Revegetation, and Maintenance Plan (Plan).

IV. PRECONSTRUCTION PLANNING

A. A copy of the Stormwater Pollution Prevention Plan (SWPPP) prepared for compliance with the U.S. Environmental Protection Agency's (EPA) National Stormwater Program General Permit requirements must be available in the field on each construction spread. The SWPPP shall contain Spill Prevention and Response Procedures that meet the requirements of state and Federal agencies.

1. It shall be the responsibility of the project sponsor and its contractors to structure their operations in a manner that reduces the risk of spills or the accidental exposure of fuels or hazardous materials to waterbodies or wetlands. The project sponsor and its contractors must, at a minimum, ensure that:

a. all employees handling fuels and other hazardous materials are properly trained;

b. all equipment is in good operating order and inspected on a regular basis;

c. fuel trucks transporting fuel to on-site equipment travel only on approved access roads;

d. all equipment is parked overnight and/or fueled at least 100 feet from a waterbody or in an upland area at least 100 feet from a wetland boundary. These activities can occur closer only if the Environmental Inspector finds, in advance, no reasonable alternative and the project sponsor and its contractors have taken appropriate steps (including secondary containment structures) to prevent spills and provide for prompt cleanup in the event of a spill;

e. hazardous materials, including chemicals, fuels, and lubricating oils, are not stored within 100 feet of a wetland, waterbody, or designated municipal watershed area, unless the location is designated for such use by an appropriate governmental authority. This applies to storage of these materials and does not apply to normal operation or use of equipment in these areas; and

f. concrete coating activities are not performed within 100 feet of a wetland or waterbody boundary, unless the location is an existing industrial site designated for such use.

2. The project sponsor and its contractors must structure their operations in a manner that provides for the prompt and effective cleanup of spills of fuel and other hazardous materials. At a minimum, the project sponsor and its contractors must:

a. ensure that each construction crew (including cleanup crews) has on hand sufficient supplies of absorbent and barrier materials to allow the rapid containment and recovery of spilled materials and knows the procedure for reporting spills;

b. ensure that each construction crew has on hand sufficient tools and material to stop leaks;

c. know the contact names and telephone numbers for all local, state, and Federal agencies (including, if necessary, the U. S. Coast Guard and the National Response Center) that must be notified of a spill; and

d. follow the requirements of those agencies in cleaning up the spill, in excavating and disposing of soils or other materials contaminated by a spill, and in collecting and disposing of waste generated during spill cleanup.

B. AGENCY COORDINATION

The project sponsor must coordinate with the appropriate local, state, and Federal agencies as outlined in these Procedures and in the Certificate.

V. WATERBODY CROSSINGS

A. NOTIFICATION PROCEDURES AND PERMITS

1. Apply to the U.S. Army Corps of Engineers (COE), or its delegated agency, for the appropriate wetland and waterbody crossing permits.

2. Provide written notification to authorities responsible for potable surface water supply intakes located within 3 miles downstream of the crossing at least 1 week before beginning work in the waterbody, or as otherwise specified by that authority.

3. Apply for state-issued waterbody crossing permits and obtain individual or generic section 401 water quality certification or waiver.

4. Notify appropriate state authorities at least 48 hours before beginning trenching or blasting within the waterbody, or as specified in state permits.

B. INSTALLATION

1. Time Window for Construction

Unless expressly permitted or further restricted by the appropriate state agency in writing on a site-specific basis, instream work, except that required to install or remove equipment bridges, must occur during the following time windows:

a. coldwater fisheries - June 1 through September 30; and

b. coolwater and warmwater fisheries - June 1 through November 30.

2. Extra Work Areas

a. Locate all extra work areas (such as staging areas and additional spoil storage areas) at least 50 feet away from water’s edge, except where the adjacent upland consists of actively cultivated or rotated cropland or other disturbed land.

b. The project sponsor shall file with the Secretary for review and written approval by the Director, a site-specific construction plan for each extra work area with a less than 50-foot setback from the water's edge, (except where the adjacent upland consists of actively cultivated or rotated cropland or other disturbed land) and a site-specific explanation of the conditions that will not permit a 50-foot setback.

c. Limit clearing of vegetation between extra work areas and the edge of the waterbody to the certificated construction right-of-way.

d. Limit the size of extra work areas to the minimum needed to construct the waterbody crossing.

3. General Crossing Procedures

a. Comply with the COE, or its delegated agency, permit terms and conditions.

b. Construct crossings as close to perpendicular to the axis of the waterbody channel as engineering and routing conditions permit.

c. If the pipeline parallels a waterbody, attempt to maintain at least 15 feet of undisturbed vegetation between the waterbody (and any adjacent wetland) and the construction right-of-way.

d. Where waterbodies meander or have multiple channels, route the pipeline to minimize the number of waterbody crossings.

e. Maintain adequate flow rates to protect aquatic life, and prevent the interruption of existing downstream uses.

f. Waterbody buffers (extra work area setbacks, refueling restrictions, etc.) must be clearly marked in the field with signs and/or highly visible flagging until construction-related ground disturbing activities are complete.

4. Spoil Pile Placement and Control

a. All spoil from minor and intermediate waterbody crossings, and upland spoil from major waterbody crossings, must be placed in the construction right-of-way at least 10 feet from the water's edge or in additional extra work areas as described in section V.B.2.

b. Use sediment barriers to prevent the flow of spoil or heavily silt-laden water into any waterbody.

5. Equipment Bridges

a. Only clearing equipment and equipment necessary for installation of equipment bridges may cross waterbodies prior to bridge installation. Limit the number of such crossings of each waterbody to one per piece of clearing equipment.

b. Construct equipment bridges to maintain unrestricted flow and to prevent soil from entering the waterbody. Examples of such bridges include:

(1) equipment pads and culvert(s);
(2) equipment pads or railroad car bridges without culverts;
(3) clean rock fill and culvert(s); and
(4) flexi-float or portable bridges.

Additional options for equipment bridges may be utilized that achieve the performance objectives noted above. Do not use soil to construct or stabilize equipment bridges.

c. Design and maintain each equipment bridge to withstand and pass the highest flow expected to occur while the bridge is in place. Align culverts to prevent bank erosion or streambed scour. If necessary, install energy dissipating devices downstream of the culverts.

d. Design and maintain equipment bridges to prevent soil from entering the waterbody.

e. Remove equipment bridges as soon as possible after permanent seeding unless the COE, or its delegated agency, authorizes it as a permanent bridge.

f. If there will be more than 1 month between final cleanup and the beginning of permanent seeding and reasonable alternative access to the right-of-way is available, remove equipment bridges as soon as possible after final cleanup.

6. Dry-Ditch Crossing Methods

a. Unless approved otherwise by the appropriate state agency, install the pipeline using one of the dry-ditch methods outlined below for crossings of waterbodies up to 30 feet wide (at the water's edge at the time of construction) that are state-designated as either coldwater or significant coolwater or warmwater fisheries.

b. Dam and Pump

(1) The dam-and-pump method may be used without prior approval for crossings of waterbodies where pumps can adequately transfer streamflow volumes around the work area, and there are no concerns about sensitive species passage.

(2) Implementation of the dam-and-pump crossing method must meet the following performance criteria:

(i) use sufficient pumps, including on-site backup pumps, to maintain downstream flows;
(ii) construct dams with materials that prevent sediment and other pollutants from entering the waterbody (e.g., sandbags or clean gravel with plastic liner);
(iii) screen pump intakes;
(iv) prevent streambed scour at pump discharge; and
(v) monitor the dam and pumps to ensure proper operation throughout the waterbody crossing.

c. Flume Crossing

The flume crossing method requires implementation of the following steps:

(1) install flume pipe after blasting (if necessary), but before any trenching;

(2) use sand bag or sand bag and plastic sheeting diversion structure or equivalent to develop an effective seal and to divert stream flow through the flume pipe (some modifications to the stream bottom may be required in to achieve an effective seal);

(3) properly align flume pipe(s) to prevent bank erosion and streambed scour;

(4) do not remove flume pipe during trenching, pipelaying, or backfilling activities, or initial streambed restoration efforts; and

(5) remove all flume pipes and dams that are not also part of the equipment bridge as soon as final cleanup of the stream bed and bank is complete.

d. Horizontal Directional Drill (HDD)

To the extent they were not provided as part of the pre-certification process, for each waterbody or wetland that would be crossed using the HDD method, provide a plan that includes:

(1) site-specific construction diagrams that show the location of mud pits, pipe assembly areas, and all areas to be disturbed or cleared for construction;

(2) a description of how an inadvertent release of drilling mud would be contained and cleaned up; and

(3) a contingency plan for crossing the waterbody or wetland in the event the directional drill is unsuccessful and how the abandoned drill hole would be sealed, if necessary.

7. Crossings of Minor Waterbodies

Where a dry-ditch crossing is not required, minor waterbodies may be crossed using the open-cut crossing method, with the following restrictions:

a. except for blasting and other rock breaking measures, complete instream construction activities (including trenching, pipe installation, backfill, and restoration of the streambed contours) within 24 hours. Streambanks and unconsolidated streambeds may require additional restoration after this period;

b. limit use of equipment operating in the waterbody to that needed to construct the crossing; and

c. equipment bridges are not required at minor waterbodies that do not have a state-designated fishery classification (e.g., agricultural or intermittent drainage ditches). However, if an equipment bridge is used it must be constructed as described in section V.B.5.

8. Crossings of Intermediate Waterbodies

Where a dry-ditch crossing is not required, intermediate waterbodies may be crossed using the open-cut crossing method, with the following restrictions:

a. complete instream construction activities (not including blasting and other rock breaking measures) within 48 hours, unless site-specific conditions make completion within 48 hours infeasible;

b. limit use of equipment operating in the waterbody to that needed to construct the crossing; and

c. all other construction equipment must cross on an equipment bridge as specified in section V.B.5.

9. Crossings of Major Waterbodies

Before construction, the project sponsor shall file with the Secretary for the review and written approval by the Director a detailed, site-specific construction plan and scaled drawings identifying all areas to be disturbed by construction for each major waterbody crossing (the scaled drawings are not required for any offshore portions of pipeline projects). This plan should be developed in consultation with the appropriate state and Federal agencies and should include extra work areas, spoil storage areas, sediment control structures, etc., as well as mitigation for navigational issues.

The Environmental Inspector may adjust the final placement of the erosion and sediment control structures in the field to maximize effectiveness.

10. Temporary Erosion and Sediment Control

Install sediment barriers (as defined in section IV.F.2.a. of the Plan) immediately after initial disturbance of the waterbody or adjacent upland. Sediment barriers must be properly maintained throughout construction and reinstalled as necessary (such as after backfilling of the trench) until replaced by permanent erosion controls or restoration of adjacent upland areas is complete. Temporary erosion and sediment control measures are addressed in more detail in the Plan; however, the following specific measures must be implemented at stream crossings:

a. install sediment barriers across the entire construction right-of-way at all waterbody crossings, where necessary to prevent the flow of sediments into the waterbody. In the travel lane, these may consist of removable sediment barriers or driveable berms. Removable sediment barriers can be removed during the construction day, but must be re-installed after construction has stopped for the day and/or when heavy precipitation is imminent;

b. where waterbodies are adjacent to the construction right-of-way, install sediment barriers along the edge of the construction right-of-way as necessary to contain spoil and sediment within the construction right-of-way; and

c. use trench plugs at all waterbody crossings, as necessary, to prevent diversion of water into upland portions of the pipeline trench and to keep any accumulated trench water out of the waterbody.

11. Trench Dewatering

Dewater the trench (either on or off the construction right-of-way) in a manner that does not cause erosion and does not result in heavily silt-laden water flowing into any waterbody. Remove the dewatering structures as soon as possible after the completion of dewatering activities.

C. RESTORATION

1. Use clean gravel or native cobbles for the upper 1 foot of trench backfill in all waterbodies that contain coldwater fisheries.

2. For open-cut crossings, stabilize waterbody banks and install temporary sediment barriers within 24 hours of completing instream construction activities. For dry-ditch crossings, complete streambed and bank stabilization before returning flow to the waterbody channel.

3. Return all waterbody banks to preconstruction contours or to a stable angle of repose as approved by the Environmental Inspector.

4. Application of riprap for bank stabilization must comply with COE, or its delegated agency, permit terms and conditions.

5. Unless otherwise specified by state permit, limit the use of riprap to areas where flow conditions preclude effective vegetative stabilization techniques such as seeding and erosion control fabric.

6. Revegetate disturbed riparian areas with conservation grasses and legumes or native plant species, preferably woody species.

7. Install a permanent slope breaker across the construction right-of-way at the base of slopes greater than 5 percent that are less than 50 feet from the waterbody, or as needed to prevent sediment transport into the waterbody. In addition, install sediment barriers as outlined in the Plan. In some areas, with the approval of the Environmental Inspector, an earthen berm may be suitable as a sediment barrier adjacent to the waterbody.

8. Sections V.C.3. through V.C.6. above also apply to those perennial or intermittent streams not flowing at the time of construction.

D. POST-CONSTRUCTION MAINTENANCE

1. Limit vegetation maintenance adjacent to waterbodies to allow a riparian strip at least 25 feet wide, as measured from the waterbody's mean high water mark, to permanently revegetate with native plant species across the entire construction right-of-way. However, to facilitate periodic pipeline corrosion/leak surveys, a corridor centered on the pipeline and up to 10 feet wide may be maintained in a herbaceous state. In addition, trees that are located within 15 feet of the pipeline that are greater than 15 feet in height may be cut and removed from the permanent right-of-way.

2. Do not use herbicides or pesticides in or within 100 feet of a waterbody except as allowed by the appropriate land management or state agency.

VI. WETLAND CROSSINGS

A. GENERAL

1. The project sponsor shall conduct a wetland delineation using the current Federal methodology and file a wetland delineation report with the Secretary before construction. This report shall identify:

   a. by milepost all wetlands that would be affected;

   b. the National Wetlands Inventory (NWI) classification for each wetland;

   c. the crossing length of each wetland in feet; and

   d. the area of permanent and temporary disturbance that would occur in each wetland by NWI classification type.

   The requirements outlined in this section do not apply to wetlands in actively cultivated or rotated cropland. Standard upland protective measures, including workspace and topsoiling requirements, apply to these agricultural wetlands.

2. Route the pipeline to avoid wetland areas to the maximum extent possible. If a wetland cannot be avoided or crossed by following an existing right-of-way, route the new pipeline in a manner that minimizes disturbance to wetlands. Where looping an existing pipeline, overlap the existing pipeline right-of-way with the new construction right-of-way. In addition, locate the loop line no more than 25 feet away from the existing pipeline unless site-specific constraints would adversely affect the stability of the existing pipeline.

3. Limit the width of the construction right-of-way to 75 feet or less. Prior written approval of the Director is required where topographic conditions or soil limitations require that the construction right-of-way width within the boundaries of a federally delineated wetland be expanded beyond 75 feet. Early in the planning process the project sponsor is encouraged to identify site-specific areas where existing soils lack adequate unconfined compressive strength that would result in excessively wide ditches and/or difficult to contain spoil piles.

4. Wetland boundaries and buffers must be clearly marked in the field with signs and/or highly visible flagging until construction-related ground disturbing activities are complete.

5. Implement the measures of sections V. <u>and</u> VI. in the event a waterbody crossing is located within or adjacent to a wetland crossing. If all measures of sections V. and VI. cannot be met, the project sponsor must file with the Secretary a site-specific crossing plan for review and written approval by the Director before construction. This crossing plan shall address at a minimum:

   a. spoil control;

   b. equipment bridges;

   c. restoration of waterbody banks and wetland hydrology;

   d. timing of the waterbody crossing;

e. method of crossing; and

f. size and location of all extra work areas.

6. Do not locate aboveground facilities in any wetland, except where the location of such facilities outside of wetlands would prohibit compliance with U.S. Department of Transportation regulations.

B. INSTALLATION

1. Extra Work Areas and Access Roads

a. Locate all extra work areas (such as staging areas and additional spoil storage areas) at least 50 feet away from wetland boundaries, except where the adjacent upland consists of actively cultivated or rotated cropland or other disturbed land.

b. The project sponsor shall file with the Secretary for review and written approval by the Director, a site-specific construction plan for each extra work area with a less than 50-foot setback from wetland boundaries (except where adjacent upland consists of actively cultivated or rotated cropland or other disturbed land) and a site-specific explanation of the conditions that will not permit a 50-foot setback.

c. Limit clearing of vegetation between extra work areas and the edge of the wetland to the certificated construction right-of-way.

d. The construction right-of-way may be used for access when the wetland soil is firm enough to avoid rutting or the construction right-of-way has been appropriately stabilized to avoid rutting (e.g., with timber riprap, prefabricated equipment mats, or terra mats).

In wetlands that cannot be appropriately stabilized, all construction equipment other than that needed to install the wetland crossing shall use access roads located in upland areas. Where access roads in upland areas do not provide reasonable access, limit all other construction equipment to one pass through the wetland using the construction right-of-way.

e. The only access roads, other than the construction right-of-way, that can be used in wetlands without Director approval, are those existing roads that can be used with no modification and no impact on the wetland.

2. Crossing Procedures

a. Comply with COE, or its delegated agency, permit terms and conditions

b. Assemble the pipeline in an upland area unless the wetland is dry enough to adequately support skids and pipe.

c. Use "push-pull" or "float" techniques to place the pipe in the trench where water and other site conditions allow.

d. Minimize the length of time that topsoil is segregated and the trench is open.

e. Limit construction equipment operating in wetland areas to that needed to clear the construction right-of-way, dig the trench, fabricate and install the pipeline, backfill the trench, and restore the construction right-of-way.

f. Cut vegetation just aboveground level, leaving existing root systems in place, and remove it from the wetland for disposal.

g. Limit pulling of tree stumps and grading activities to directly over the trenchline. Do not grade or remove stumps or root systems from the rest of the construction right-of-way in wetlands unless the Chief Inspector and Environmental Inspector determine that safety-related construction constraints require grading or the removal of tree stumps from under the working side of the construction right-of-way.

h. Segregate the top 1 foot of topsoil from the area disturbed by trenching, except in areas where standing water is present or soils are saturated or frozen. Immediately after backfilling is complete, restore the segregated topsoil to its original location.

i. Do not use rock, soil imported from outside the wetland, tree stumps, or brush riprap to support equipment on the construction right-of-way.

j. If standing water or saturated soils are present, or if construction equipment causes ruts or mixing of the topsoil and subsoil in wetlands, use low-ground-weight construction equipment, or operate normal equipment on timber riprap, prefabricated equipment mats, or terra mats.

k. Do not cut trees outside of the approved construction work area to obtain timber for riprap or equipment mats.

l. Attempt to use no more than two layers of timber riprap to support equipment on the construction right-of-way.

m. Remove all project-related material used to support equipment on the construction right-of-way upon completion of construction.

3. Temporary Sediment Control

Install sediment barriers (as defined in section IV.F.2.a. of the Plan) immediately after initial disturbance of the wetland or adjacent upland. Sediment barriers must be properly maintained throughout construction and reinstalled as necessary (such as after backfilling of the trench). Except as noted below in section VI.B.3.c., maintain sediment barriers until replaced by permanent erosion controls or restoration of adjacent upland areas is complete. Temporary erosion and sediment control measures are addressed in more detail in the Plan.

a. Install sediment barriers across the entire construction right-of-way at all wetland crossings where necessary to prevent sediment flow into the wetland. In the travel lane, these may consist of removable sediment barriers or driveable berms. Removable sediment barriers can be removed during the construction day, but must be re-installed after construction has stopped for the day and/or when heavy precipitation is imminent

b. Where wetlands are adjacent to the construction right-of-way and the right-of-way slopes toward the wetland, install sediment barriers along the edge of the construction right-of-way as necessary to prevent sediment flow into the wetland.

c. Install sediment barriers along the edge of the construction right-of-way as necessary to contain spoil and sediment within the construction right-of-way through wetlands. Remove these sediment barriers during right-of-way cleanup.

4. Trench Dewatering

Dewater the trench (either on or off the construction right-of-way) in a manner that does not cause erosion and does not result in heavily silt-laden water flowing into any wetland. Remove the dewatering structures as soon as possible after the completion of dewatering activities.

C. RESTORATION

1. Where the pipeline trench may drain a wetland, construct trench breakers and/or seal the trench bottom as necessary to maintain the original wetland hydrology.

2. For each wetland crossed, install a trench breaker at the base of slopes near the boundary between the wetland and adjacent upland areas. Install a permanent slope breaker across the construction right-of-way at the base of a slopes greater than 5 percent where the base of the slope is less than 50 feet from the wetland, or as needed to prevent sediment transport into the wetland. In addition, install sediment barriers as outlined in the Plan. In some areas, with the approval of the Environmental Inspector, an earthen berm may be suitable as a sediment barrier adjacent to the wetland.

3. Do not use fertilizer, lime, or mulch unless required in writing by the appropriate land management or state agency.

4. Consult with the appropriate land management or state agency to develop a project-specific wetland restoration plan. The restoration plan should include measures for re-establishing herbaceous and/or woody species, controlling the invasion and spread of undesirable exotic species (e.g., purple loosestrife and phragmites), and monitoring the success of the revegetation and weed control efforts. Provide this plan to the FERC staff upon request.

5. Until a project-specific wetland restoration plan is developed and/or implemented, temporarily revegetate the construction right-of-way with annual ryegrass at a rate of 40 pounds/acre (unless standing water is present).

6. Ensure that all disturbed areas successfully revegetate with wetland herbaceous and/or woody plant species.

7. Remove temporary sediment barriers located at the boundary between wetland and adjacent upland areas after upland revegetation and stabilization of adjacent upland areas are judged to be successful as specified in section VII.A.5. of the Plan.

D. POST-CONSTRUCTION MAINTENANCE

1. Do not conduct vegetation maintenance over the full width of the permanent right-of-way in wetlands. However, to facilitate periodic pipeline corrosion/leak surveys, a corridor centered on the pipeline and up to 10 feet wide may be maintained in a herbaceous state. In addition, trees within 15 feet of the pipeline that are greater than 15 feet in height may be selectively cut and removed from the permanent right-of-way.

2. Do not use herbicides or pesticides in or within 100 feet of a wetland, except as allowed by the appropriate land management agency or state agency.

3. Monitor and record the success of wetland revegetation annually for the first 3 years after construction or until wetland revegetation is successful. At the end of 3 years after construction, file a report with the Secretary identifying the status of the wetland revegetation efforts. Include the percent cover achieved and problem areas (weed invasion issues, poor revegetation, etc.). Continue to file a report annually until wetland revegetation is successful.

4. Wetland revegetation shall be considered successful if the cover of herbaceous and/or woody species is at least 80 percent of the type, density, and distribution of the vegetation in adjacent wetland areas that were not disturbed by construction. If revegetation is not successful at the end of 3 years, develop and implement (in consultation with a professional wetland ecologist) a remedial revegetation plan to actively revegetate the wetland. Continue revegetation efforts until wetland revegetation is successful.

## VII. HYDROSTATIC TESTING

### A. NOTIFICATION PROCEDURES AND PERMITS

1. Apply for state-issued water withdrawal permits, as required.

2. Apply for National Pollutant Discharge Elimination System (NPDES) or state-issued discharge permits, as required.

3. Notify appropriate state agencies of intent to use specific sources at least 48 hours before testing activities unless they waive this requirement in writing.

### B. GENERAL

1. Perform non-destructive testing of all pipeline section welds or hydrotest the pipeline sections, before installation under waterbodies or wetlands.

2. If pumps used for hydrostatic testing are within 100 feet of any waterbody or wetland, address the operation and refueling of these pumps in the project’s Spill Prevention and Response Procedures.

3. The project sponsor shall file with the Secretary before construction a list identifying the location of all waterbodies proposed for use as a hydrostatic test water source or discharge location.

### C. INTAKE SOURCE AND RATE

1. Screen the intake hose to prevent entrainment of fish.

2. Do not use state-designated exceptional value waters, waterbodies which provide habitat for federally listed threatened or endangered species, or waterbodies designated as public water supplies, unless appropriate Federal, state, and/or local permitting agencies grant written permission.

3. Maintain adequate flow rates to protect aquatic life, provide for all waterbody uses, and provide for downstream withdrawals of water by existing users.

4. Locate hydrostatic test manifolds outside wetlands and riparian areas to the maximum extent practicable.

D. DISCHARGE LOCATION, METHOD, AND RATE

1. Regulate discharge rate, use energy dissipation device(s), and install sediment barriers, as necessary, to prevent erosion, streambed scour, suspension of sediments, or excessive streamflow.

2. Do not discharge into state-designated exceptional value waters, waterbodies which provide habitat for federally listed threatened or endangered species, or waterbodies designated as public water supplies, unless appropriate Federal, state, and local permitting agencies grant written permission.

# UPLAND EROSION CONTROL, REVEGETATION, AND MAINTENANCE PLAN

01/17/2003 VERSION

# UPLAND EROSION CONTROL, REVEGETATION, AND MAINTENANCE PLAN

TABLE OF CONTENTS


I. APPLICABILITY ..... 1

II. SUPERVISION AND INSPECTION ..... 2
- A. ENVIRONMENTAL INSPECTION ..... 2
- B. RESPONSIBILITIES OF ENVIRONMENTAL INSPECTORS ..... 2

III. PRECONSTRUCTION PLANNING ..... 4
- A. CONSTRUCTION WORK AREAS ..... 4
- B. DRAIN TILE AND IRRIGATION SYSTEMS ..... 4
- C. GRAZING DEFERMENT ..... 5
- D. ROAD CROSSINGS AND ACCESS POINTS ..... 5
- E. DISPOSAL PLANNING ..... 5
- F. AGENCY COORDINATION ..... 5
- G. STORMWATER POLLUTION PREVENTION PLAN ..... 5

IV. INSTALLATION ..... 6
- A. APPROVED AREAS OF DISTURBANCE ..... 6
- B. TOPSOIL SEGREGATION ..... 7
- C. DRAIN TILES ..... 7
- D. IRRIGATION ..... 8
- E. ROAD CROSSINGS AND ACCESS POINTS ..... 8
- F. TEMPORARY EROSION CONTROL ..... 8
  - 1. Temporary Slope Breakers ..... 8
  - 2. Sediment Barriers ..... 9
  - 3. Mulch ..... 10

V. RESTORATION ..... 11
- A. CLEANUP ..... 11
- B. PERMANENT EROSION CONTROL DEVICES ..... 12
  - 1. Trench Breakers ..... 12
  - 2. Permanent Slope Breakers ..... 13
- C. SOIL COMPACTION MITIGATION ..... 13
- D. REVEGETATION ..... 14
  - 1. General ..... 14
  - 2. Soil Additives ..... 14
  - 3. Seeding Requirements ..... 14

VI. OFF-ROAD VEHICLE CONTROL ..... 16

VII. POST-CONSTRUCTION ACTIVITIES ..... 16
- A. MONITORING AND MAINTENANCE ..... 16
- B. REPORTING ..... 17


01/17/2003 VERSION

# UPLAND EROSION CONTROL, REVEGETATION, AND MAINTENANCE PLAN (PLAN)

## I. APPLICABILITY

A. The intent of this Plan is to assist applicants by identifying baseline mitigation measures for minimizing erosion and enhancing revegetation. The project sponsors should specify in their applications for a FERC Certificate (Certificate) any individual measures in this Plan they consider unnecessary, technically infeasible, or unsuitable due to local conditions and to fully describe any alternative measures they would use. Applicants should also explain how those alternative measures would achieve a comparable level of mitigation.

Once a project is certificated, further changes can be approved. Any such changes from the measures in this Plan (or the applicant's approved plan) will be approved by the Director of the Office of Energy Projects (Director), upon the applicant's written request, if the Director agrees that an alternative measure:

1. provides equal or better environmental protection;

2. is necessary because a portion of this Plan is infeasible or unworkable based on project-specific conditions; or

3. is specifically required in writing by another Federal, state, or Native American land management agency for the portion of the project on its land or under its jurisdiction.

Any requirements in this Plan to file material with the Secretary of the FERC (Secretary) do not apply to projects undertaken under the provisions of the blanket certificate program. This exemption does not apply to a request for alternative measures.

Project-related impacts on wetland and waterbody systems are addressed in the staff's Wetland and Waterbody Construction and Mitigation Procedures (Procedures).

## II. SUPERVISION AND INSPECTION

### A. ENVIRONMENTAL INSPECTION

1. At least one Environmental Inspector is required for each construction spread during construction and restoration (as defined by section V). The number and experience of Environmental Inspectors assigned to each construction spread should be appropriate for the length of the construction spread and the number/significance of resources affected.

2. Environmental Inspectors shall have peer status with all other activity inspectors.

3. Environmental Inspectors shall have the authority to stop activities that violate the environmental conditions of the Certificate, state and Federal environmental permit conditions, or landowner requirements; and to order appropriate corrective action.

### B. RESPONSIBILITIES OF ENVIRONMENTAL INSPECTORS

At a minimum, the Environmental Inspector(s) shall be responsible for:

1. Ensuring compliance with the requirements of this Plan, the Procedures, the environmental conditions of the Certificate authorization, the mitigation measures proposed by the applicant (as approved and/or modified by the Certificate), other environmental permits and approvals, and environmental requirements in landowner easement agreements;

2. Identifying, documenting, and overseeing corrective actions, as necessary to bring an activity back into compliance;

3. Verifying that the limits of authorized construction work areas and locations of access roads are properly marked before clearing;

4. Verifying the location of signs and highly visible flagging marking the boundaries of sensitive resource areas, waterbodies, wetlands, or areas with special requirements along the construction work area;

5. Identifying erosion/sediment control and soil stabilization needs in all areas;

6. Ensuring that the location of dewatering structures and slope breakers will not direct water into known cultural resources sites or locations of sensitive species;

7. Verifying that trench dewatering activities do not result in the deposition of sand, silt, and/or sediment near the point of discharge into a wetland or waterbody. If such deposition is occurring, the dewatering activity shall be stopped and the design of the discharge shall be changed to prevent reoccurrence;

8. Ensuring that subsoil and topsoil are tested in agricultural and residential areas to measure compaction and determine the need for corrective action;

9. Advising the Chief Construction Inspector when conditions (such as wet weather) make it advisable to restrict construction activities to avoid excessive rutting;

10. Ensuring restoration of contours and topsoil;

11. Verifying that the soils imported for agricultural or residential use have been certified as free of noxious weeds and soil pests, unless otherwise approved by the landowner;

12. Determining the need for and ensuring that erosion controls are properly installed, as necessary to prevent sediment flow into wetlands, waterbodies, sensitive areas, and onto roads;

13. Inspecting and ensuring the maintenance of temporary erosion control measures at least:

    a. on a daily basis in areas of active construction or equipment operation;

    b. on a weekly basis in areas with no construction or equipment operation; and

    c. within 24 hours of each 0.5 inch of rainfall;

14. Ensuring the repair of all ineffective temporary erosion control measures within 24 hours of identification;

15. Keeping records of compliance with the environmental conditions of the FERC certificate, and the mitigation measures proposed by the project sponsor in the application submitted to the FERC, and other Federal or state environmental permits during active construction and restoration; and

16. Identifying areas that should be given special attention to ensure stabilization and restoration after the construction phase.

## III. PRECONSTRUCTION PLANNING

The project sponsor shall do the following before construction:

### A. CONSTRUCTION WORK AREAS

1. Identify all construction work areas (e.g., construction right-of-way, extra work space areas, pipe storage and contractor yards, borrow and disposal areas, access roads, etc.) that would be needed for safe construction. The project sponsor must ensure that appropriate cultural resources and biological surveys have been conducted.

2. Project sponsors are encouraged to consider expanding any required cultural resources and endangered species surveys in anticipation of the need for activities outside of certificated work areas.

### B. DRAIN TILE AND IRRIGATION SYSTEMS

1. Attempt to locate existing drain tiles and irrigation systems.

2. Contact landowners and local soil conservation authorities to determine the locations of future drain tiles that are likely to be installed within 3 years of the authorized construction.

3. Develop procedures for constructing through drain-tiled areas, maintaining irrigation systems during construction, and repairing drain tiles and irrigation systems after construction.

4. Engage qualified drain tile specialists, as needed to conduct or monitor repairs to drain tile systems affected by construction. Use drain tile specialists from the project area, if available.

C. GRAZING DEFERMENT

Develop grazing deferment plans with willing landowners, grazing permittees, and land management agencies to minimize grazing disturbance of revegetation efforts.

D. ROAD CROSSINGS AND ACCESS POINTS

Plan for safe and accessible conditions at all roadway crossings and access points during construction and restoration.

E. DISPOSAL PLANNING

Determine methods and locations for the disposal of construction debris (e.g., timber, slash, mats, garbage, drilling fluids, excess rock, etc). Off-site disposal in other than commercially operated disposal locations is subject to compliance with all applicable survey, landowner permission, and mitigation requirements.

F. AGENCY COORDINATION

The project sponsor must coordinate with the appropriate local, state, and Federal agencies as outlined in this Plan and in the Certificate.

1. Obtain written recommendations from the local soil conservation authorities or land management agencies regarding permanent erosion control and revegetation specifications.

2. Develop specific procedures in coordination with the appropriate agency to prevent the introduction or spread of noxious weeds and soil pests resulting from construction and restoration activities.

G. STORMWATER POLLUTION PREVENTION PLAN

Make available on each construction spread the Stormwater Pollution Prevention Plan prepared for compliance with the U.S. Environmental Protection Agency's National Stormwater Program General Permit requirements.

IV. INSTALLATION

A. APPROVED AREAS OF DISTURBANCE

1. Project-related ground disturbance shall be limited to the construction right-of-way, extra work space areas, pipe storage yards, borrow and disposal areas, access roads, and other areas approved in the Certificate. Any project-related ground disturbing activities outside these Certificated areas, except those needed to comply with the Plan and Procedures (e.g., slope breakers, energy-dissipating devices, dewatering structures, drain tile system repairs) will require prior Director approval. All construction or restoration activities outside of the Certificated areas are subject to all applicable survey and mitigation requirements.

2. The construction right-of-way width for a project shall not exceed 75 feet or that described in the FERC application unless otherwise modified by a Certificate condition. However, in limited, non-wetland areas, this construction right-of-way width may be expanded by up to 25 feet without Director approval to accommodate full construction right-of-way topsoil segregation and to ensure safe construction where topographic conditions (such as side-slopes) or soil limitations require it. Twenty-five feet of extra construction right-of-way width may also be used in limited, non-wetland or non-forested areas for truck turn-arounds where no reasonable alternative access exists.

   Project use of these additional limited areas is subject to landowner approval and compliance with all applicable survey and mitigation requirements. When such additional areas are used, each one should be identified and the need explained in the weekly or biweekly construction reports to the FERC, if required. The following material should be included in the reports:

   a. the location of each additional area by station number and reference to a previously filed alignment sheet, or updated alignment sheets showing the additional areas;

   b. identification of where the Commission's records contain evidence that the additional areas were previously surveyed; and

c. a statement that landowner approval has been obtained and is available in project files.

Prior written approval of the Director is required when the Certificated construction right-of-way width would be expanded by more than 25 feet.

B. TOPSOIL SEGREGATION

1. Unless the landowner or land management agency specifically approves otherwise, prevent the mixing of topsoil with subsoil by stripping topsoil from either the full work area or from the trench and subsoil storage area (ditch plus spoil side method) in:

   a. actively cultivated or rotated croplands and pastures;

   b. residential areas;

   c. hayfields; and

   d. other areas at the landowner's or land managing agency’s request.

2. In residential areas importation of topsoil is an acceptable alternative to topsoil segregation.

3. In deep soils (more than 12 inches of topsoil), segregate at least 12 inches of topsoil. In soils with less than 12 inches of topsoil make every effort to segregate the entire topsoil layer.

4. Where topsoil segregation is required, maintain separation of salvaged topsoil and subsoil throughout all construction activities.

5. Segregated topsoil may not be used for padding the pipe.

C. DRAIN TILES

1. Mark locations of drain tiles damaged during construction.

2. Probe all drainage tile systems within the area of disturbance to check for damage.

3. Repair damaged drain tiles to their original or better condition. Do not use filter-covered drain tiles unless the local soil conservation authorities and the landowner agree. Use qualified specialists for testing and repairs.

4. For new pipelines in areas where drain tiles exist or are planned, ensure that the depth of cover over the pipeline is sufficient to avoid interference with drain tile systems. For adjacent pipeline loops in agricultural areas, install the new pipeline with at least the same depth of cover as the existing pipeline(s).

D. IRRIGATION

Maintain water flow in crop irrigation systems, unless shutoff is coordinated with affected parties.

E. ROAD CROSSINGS AND ACCESS POINTS

1. Maintain safe and accessible conditions at all road crossings and access points during construction.

2. If crushed stone access pads are used in residential or active agricultural areas, place the stone on synthetic fabric to facilitate removal.

F. TEMPORARY EROSION CONTROL

Install temporary erosion controls immediately after initial disturbance of the soil. Temporary erosion controls must be properly maintained throughout construction (on a daily basis) and reinstalled as necessary (such as after backfilling of the trench) until replaced by permanent erosion controls or restoration is complete.

1. Temporary Slope Breakers

a. Temporary slope breakers are intended to reduce runoff velocity and divert water off the construction right-of-way. Temporary slope breakers may be constructed of materials such as soil, silt fence, staked hay or straw bales, or sand bags.

b. Install temporary slope breakers on all disturbed areas, as necessary to avoid excessive erosion. Temporary slope breakers must be installed on slopes greater than 5 percent where the base of the slope is less than 50 feet from waterbody, wetland, and road crossings at the following spacing (closer spacing should be used if necessary):

| Slope (%) | Spacing (feet) |
|---|---|
| 5 - 15 | 300 |
| >15 - 30 | 200 |
| >30 | 100 |

c. Direct the outfall of each temporary slope breaker to a stable, well vegetated area or construct an energy-dissipating device at the end of the slope breaker and off the construction right-of-way.

d. Position the outfall of each temporary slope breaker to prevent sediment discharge into wetlands, waterbodies, or other sensitive resources.

2. Sediment Barriers

a. Sediment barriers are intended to stop the flow of sediments and to prevent the deposition of sediments into sensitive resources. They may be constructed of materials such as silt fence, staked hay or straw bales, compacted earth (e.g., driveable berms across travelways), sand bags, or other appropriate materials.

b. At a minimum, install and maintain temporary sediment barriers across the entire construction right-of-way at the base of slopes greater than 5 percent where the base of the slope is less than 50 feet from a waterbody, wetland, or road crossing until revegetation is successful as defined in this Plan. Leave adequate room between the base of the slope and the sediment barrier to accommodate ponding of water and sediment deposition.

c. Where wetlands or waterbodies are adjacent to and downslope of construction work areas, install sediment barriers along the edge of these areas, as necessary to prevent sediment flow into the wetland or waterbody.

3. Mulch

a. Apply mulch on all slopes (except in actively cultivated cropland) concurrent with or immediately after seeding, where necessary to stabilize the soil surface and to reduce wind and water erosion. Spread mulch uniformly over the area to cover at least 75 percent of the ground surface at a rate of 2 tons/acre of straw or its equivalent, unless the local soil conservation authority, landowner, or land managing agency approves otherwise in writing.

b. Mulch can consist of weed-free straw or hay, wood fiber hydromulch, erosion control fabric, or some functional equivalent.

c. Mulch <u>before</u> seeding if:

(1) final grading and installation of permanent erosion control measures will not be completed in an area within 20 days after the trench in that area is backfilled (10 days in residential areas), as required in section V.A.1; or

(2) construction or restoration activity is interrupted for extended periods, such as when seeding cannot be completed due to seeding period restrictions.

d. If mulching <u>before</u> seeding, increase mulch application on all slopes within 100 feet of waterbodies and wetlands to a rate of 3 tons/acre of straw or equivalent.

e. If wood chips are used as mulch, do not use more than 1 ton/acre and add the equivalent of 11 lbs/acre available nitrogen (at least 50 percent of which is slow release).

f. Ensure that mulch is adequately anchored to minimize loss due to wind and water.

g. When anchoring with liquid mulch binders, use rates recommended by the manufacturer. Do not use liquid mulch binders within 100 feet of wetlands or waterbodies.

h. Install erosion control fabric on waterbody banks at the time of final bank recontouring. Anchor the erosion control fabric with staples or other appropriate devices.

V. RESTORATION

A. CLEANUP

1. Commence cleanup operations immediately following backfill operations. Complete final grading, topsoil replacement, and installation of permanent erosion control structures within 20 days after backfilling the trench (10 days in residential areas). If seasonal or other weather conditions prevent compliance with these time frames, maintain temporary erosion controls (temporary slope breakers and sediment barriers) until conditions allow completion of cleanup.

   The project sponsor should file with the Secretary for the review and written approval of the Director, a winterization plan if construction will continue into the winter season when conditions could delay successful decompaction, topsoil replacement, or seeding until the following spring.

2. A travel lane may be left open temporarily to allow access by construction traffic if the temporary erosion control structures are installed (as specified in section IV.F.) and inspected and maintained (as specified in sections II.B.12 through 14). When access is no longer required, the travel lane must be removed and the right-of-way restored.

3. Rock excavated from the trench may be used to backfill the trench only to the top of the existing bedrock profile. Rock that is not returned to the trench should be considered construction debris, unless approved for use as mulch or for some other use on the construction work areas by the landowner or land managing agency.

4. Remove excess rock from at least the top 12 inches of soil in all actively cultivated or rotated cropland and pastures, hayfields, and residential areas, as well as other areas at the landowner's request. The size, density, and distribution of rock on the construction work area should be similar to adjacent areas not disturbed by construction. The landowner may approve other provisions in writing.

5. Grade the construction right-of-way to restore pre-construction contours and leave the soil in the proper condition for planting.

6. Remove construction debris from all construction work areas unless the landowner or land managing agency approves otherwise.

7. Remove temporary sediment barriers when replaced by permanent erosion control measures or when revegetation is successful.

B. PERMANENT EROSION CONTROL DEVICES

1. Trench Breakers

a. Trench breakers are intended to slow the flow of subsurface water along the trench. Trench breakers may be constructed of materials such as sand bags or polyurethane foam. Do not use topsoil in trench breakers.

b. An engineer or similarly qualified professional shall determine the need for and spacing of trench breakers. Otherwise, trench breakers shall be installed at the same spacing as and upslope of permanent slope breakers.

c. In agricultural fields and residential areas where slope breakers are not typically required, install trench breakers at the same spacing as if permanent slope breakers were required.

d. At a minimum, install a trench breaker at the base of slopes greater than 5 percent where the base of the slope is less than 50 feet from a waterbody or wetland and where needed to avoid draining a waterbody or wetland.

2. Permanent Slope Breakers

a. Permanent slope breakers are intended to reduce runoff velocity, divert water off the construction right-of-way, and prevent sediment deposition into sensitive resources. Permanent slope breakers may be constructed of materials such as soil, sand bags, or some functional equivalent.

b. Construct and maintain permanent slope breakers in all areas, except cultivated areas and lawns, using spacing recommendations obtained from the local soil conservation authority or land managing agency.

In the absence of written recommendations, use the following spacing unless closer spacing is necessary to avoid excessive erosion on the construction right-of-way:

| Slope (%) | Spacing (feet) |
|---|---|
| 5 - 15 | 300 |
| >15 - 30 | 200 |
| >30 | 100 |

c. Construct slope breakers to divert surface flow to a stable area without causing water to pool or erode behind the breaker. In the absence of a stable area, construct appropriate energy-dissipating devices at the end of the breaker.

d. Slope breakers may extend slightly (about 4 feet) beyond the edge of the construction right-of-way to effectively drain water off the disturbed area. Where slope breakers extend beyond the edge of the construction right-of-way, they are subject to compliance with all applicable survey requirements.

C. SOIL COMPACTION MITIGATION

1. Test topsoil and subsoil for compaction at regular intervals in agricultural and residential areas disturbed by construction activities. Conduct tests on the same soil type under similar moisture conditions in undisturbed areas to approximate preconstruction conditions. Use penetrometers or other appropriate devices to conduct tests.

2. Plow severely compacted agricultural areas with a paraplow or other deep tillage implement. In areas where topsoil has been segregated, plow the subsoil before replacing the segregated topsoil.

   Alternatively, make arrangements with the landowner to plant and plow under a "green manure" crop, such as alfalfa, to decrease soil bulk density and improve soil structure. If subsequent construction and cleanup activities result in further compaction, conduct additional tilling.

3. Perform appropriate soil compaction mitigation in severely compacted residential areas.

D. REVEGETATION

1. General

   a. The project sponsor is responsible for ensuring successful revegetation of soils disturbed by project-related activities, except as noted in section V.D.1.b.

   b. Restore all turf, ornamental shrubs, and specialized landscaping in accordance with the landowner's request, or compensate the landowner. Restoration work must be performed by personnel familiar with local horticultural and turf establishment practices.

2. Soil Additives

   Fertilize and add soil pH modifiers in accordance with written recommendations obtained from the local soil conservation authority, land management agencies, or landowner. Incorporate recommended soil pH modifier and fertilizer into the top 2 inches of soil as soon as possible after application.

3. Seeding Requirements

   a. Prepare a seedbed in disturbed areas to a depth of 3 to 4 inches using appropriate equipment to provide a firm seedbed. When hydroseeding, scarify the seedbed to facilitate lodging and germination of seed.

b. Seed disturbed areas in accordance with written recommendations for seed mixes, rates, and dates obtained from the local soil conservation authority or as requested by the landowner or land management agency. Seeding is not required in actively cultivated croplands unless requested by the landowner.

c. Perform seeding of permanent vegetation within the recommended seeding dates. If seeding cannot be done within those dates, use appropriate temporary erosion control measures discussed in section IV.F. and perform seeding of permanent vegetation at the beginning of the next recommended seeding season. Lawns may be seeded on a schedule established with the landowner.

d. In the absence of written recommendations from the local soil conservation authorities, seed all disturbed soils within 6 working days of final grading, weather and soil conditions permitting, subject to the specifications in section V.D.3.a-c.

e. Base seeding rates on Pure Live Seed. Use seed within 12 months of seed testing.

f. Treat legume seed with an inoculant specific to the species using the manufacturer's recommended rate of inoculant appropriate for the seeding method (broadcast, drill, or hydro).

g. In the absence of written recommendations from the local soil conservation authorities, landowner, or land managing agency to the contrary, a seed drill equipped with a cultipacker is preferred for seed application.

   Broadcast or hydroseeding can be used in lieu of drilling at double the recommended seeding rates. Where seed is broadcast, firm the seedbed with a cultipacker or imprinter after seeding. In rocky soils or where site conditions may limit the effectiveness of this equipment, other alternatives may be appropriate (e.g., use of a chain drag) to lightly cover seed after application, as approved by the Environmental Inspector.

VI. OFF-ROAD VEHICLE CONTROL

To each owner or manager of forested lands offer to install and maintain measures to control unauthorized vehicle access to the right-of-way. These measures may include:

A. Signs;

B. Fences with locking gates;

C. Slash and timber barriers, pipe barriers, or a line of boulders across the right-of-way; and

D. Conifers or other appropriate trees or shrubs across the right-of-way.

VII. POST-CONSTRUCTION ACTIVITIES

A. MONITORING AND MAINTENANCE

1. Conduct follow-up inspections of all disturbed areas after the first and second growing seasons to determine the success of revegetation.

2. Revegetation in non-agricultural areas shall be considered successful if upon visual survey the density and cover of non-nuisance vegetation are similar in density and cover to adjacent undisturbed lands. In agricultural areas, revegetation shall be considered successful if crop yields are similar to adjacent undisturbed portions of the same field.

   Continue revegetation efforts until revegetation is successful.

3. Monitor and correct problems with drainage and irrigation systems resulting from pipeline construction in active agricultural areas until restoration is successful.

4. Restoration shall be considered successful if the right-of-way surface condition is similar to adjacent undisturbed lands, construction debris is removed (unless requested otherwise by the land owner or land managing agency), revegetation is successful, and proper drainage has been restored.

5. Routine vegetation maintenance clearing shall not be done more frequently than every 3 years. However, to facilitate periodic corrosion and leak surveys, a corridor not exceeding 10 feet in width centered on the pipeline may be maintained annually in a herbaceous state. In no case shall routine vegetation maintenance clearing occur between April 15 and August 1 of any year.

6. Efforts to control unauthorized off-road vehicle use, in cooperation with the landowner, shall continue throughout the life of the project. Maintain signs, gates, and vehicle trails as necessary.

B. REPORTING

1. The project sponsor shall maintain records that identify by milepost:

   a. method of application, application rate, and type of fertilizer, pH modifying agent, seed, and mulch used;

   b. acreage treated;

   c. dates of backfilling and seeding;

   d. names of landowners requesting special seeding treatment and a description of the follow-up actions; and

   e. any problem areas and how they were addressed.

2. The project sponsor shall file with the Secretary quarterly activity reports documenting problems, including those identified by the landowner, and corrective actions taken for at least 2 years following construction.

Iroquois
GAS TRANSMISSION SYSTEM
IROQUOIS PIPELINE OPERATING COMPANY, OPERATOR

# SPILL PREVENTION, CONTAINMENT, AND CONTROL PLAN

# BROOKFIELD TRANSFER COMPRESSOR STATION

## 60 High Meadow Road
## BROOKFIELD, CONNECTICUT

## IROQUOIS GAS TRANSMISSION SYSTEM, L.P.
## MARKETACCESS PROJECT

## VERSION: MARCH 28, 2006

# Note:

**This document is a template for the preparation of an SPCC Plan. Site specific information must be included by the contractor in the plan appendices prior to implementation. The contractors must update the site specific information during construction as required.**

Approved and Released for Construction:

Manager of EH&S:_____ Date:_____

| | |
|---|---|
| DAF, KD<br>Prepared By | Manager, Environmental, Health & Safety |
| Compliance Coordinator | Engineering Representative |

# TABLE OF CONTENTS

1.0 INTRODUCTION ..... 1
1.1 PERSONAL SAFETY ..... 3
1.2 TRAINING ..... 3
1.3 MATERIAL & WASTE INVENTORY ..... 3
2.0 SPILL PREVENTION PROCEDURES ..... 4
2.1 EQUIPMENT AND INSPECTION ..... 4
2.1.1 EQUIPMENT INSPECTION, AND MAINTENANCE - ..... 4
2.1.2 CONTAINERS ..... 5
2.1.3 TANKS ..... 5
2.2 DESIGNATED STORAGE, REFUELING, AND EQUIPMENT AREAS ..... 6
2.2.1 EQUIPMENT PARKING ..... 6
2.2.2 STORAGE AREAS FOR HAZARDOUS MATERIALS (I.E. FUEL, LUBRICATING OILS, AND CHEMICALS) ..... 6
2.2.3 REFUELING AND MAINTENANCE AREAS: ..... 6
3.0 MITIGATIVE MEASURES ..... 7
3.0 EMERGENCY RESPONSE PROCEDURES ..... 9
3.1 CONTRACTOR RESPONSIBILITIES ..... 9
3.2 IGTS RESPONSIBILITIES ..... 9
3.3 EMERGENCY COORDINATOR AND CHAIN-OF-COMMAND ..... 10
3.4 PRE-DISTURBANCE REQUIREMENTS ..... 10
3.5 DUTIES OF CHIEF ENVIRONMENTAL INSPECTOR ..... 11
4.0 EMERGENCY AND PERSONNEL PROTECTION EQUIPMENT ..... 12
5.0 RELEASE NOTIFICATION PROCEDURES ..... 12
5.1 SPILL/RELEASE REPORTING PROCEDURES ..... 12
5.2 EXTERNAL NOTIFICATIONS ..... 13
6.0 CLEAN-UP PROCEDURES ..... 14
6.1 OIL/FUEL SPILLS ..... 14

6.2 HAZARDOUS SUBSTANCE RELEASES ..... 16
6.3 EQUIPMENT CLEANING/STORAGE ..... 17
6.4 DISPOSAL OF CONTAMINATED MATERIALS/SOILS ..... 17

**Attachment A: Hazardous Materials**

- Hazardous Substance Inventory (Table 1)
- Material Safety Data Sheets
- Designated Areas for Parking, Refueling, and Storage
- Site-Specific Security Plan

**Attachment B: Emergency Response**

- Emergency Response Agencies and Personnel (Table 2)
- On Site Emergency Response Equipment (Table 3)
- Environmental Assistance Contact Sheet

**Attachment C: Waste Management**

- Waste Management Plan

**Attachment D: Reporting Requirements and Forms**

- Spill Release and Reporting Procedure IGTS ENV-E-04
- Spill Report Form
- Hotline Alert Card

# 1.0 INTRODUCTION

Iroquois recognizes that it is essential to protect environment features within influence of the MarketAccess project during construction activities. This Spill Prevention, Containment, and Control ("SPCC")[1] Plan defines the procedures for prevention, containment, and control of potential spills during construction of this Project. This plan is required by the Federal Energy Regulatory Commission ("FERC") and is intended to meet the requirements of 40 CFR 112.

The MarketAccess project involves construction activities at two locations as follows:

*Brookfield Transfer Compressor Station:*

Installation of a new transfer compressor station and gas cooling facility at 60 High Meadow Road, Brookfield, Connecticut.

*Dover Compressor Station, Gas Cooler Addition:*

Installation of gas cooling facility at Iroquois' existing compressor station, 146 Dover Furnace Road in Dover, New York.

This SPCC plan has been prepared for the Brookfield Transfer Compressor Station Project and is intended for use by company and contract personnel responsible for the implementation of the SPCC Plan. Site specific information must be provided by the contractor to complete Attachment A, B, and C of this report. The information in Attachment D will be provided by the Iroquois EH&S department. The Attachments are as follows:

**Attachment A: Hazardous Materials**

- Hazardous Substance Inventory (Table 1)
- Material Safety Data Sheets
- Designated Areas for Parking, Refueling, and Storage
- Site-Specific Security Plan

[1] 40 Code of Federal Regulations, Part 112

**Attachment B: Emergency Response**

- Emergency Response Agencies and Personnel (Table 2)
- On Site Emergency Response Equipment (Table 3)
- Environmental Assistance Contact Sheet

**Attachment C: Waste Management**

- Waste Management Plan

**Attachment D: Reporting Requirements and Forms**

- Spill Release and Reporting Procedure IGTS ENV-E-04
- Spill Report Form
- Hotline Alert Card

The site specific information must be updated during construction by the contractor as site conditions evolve. Prior to implementation, this plan must be approved by the Iroquois Manager of Environmental, Health and Safety ("Mgr EH&S").

Sensitive Features

Groundwater resources underlying the sites are used by area residences for drinking water. The site is also within approximately 100 feet of a domestic supply well at 67 High Meadow Road (across from the Brookfield Sales Meter Station) and is located within the Town of Brookfield Aquifer Protection Zoning District. Additional protective measures for refueling and chemical handling/storage are specified herein. Special protection areas will be reviewed in the Project's Environmental Training Program. The project is not located in a municipal watershed.

Both IGTS and Contractor personnel are to be thoroughly familiar with this Plan and its contents prior to the construction of any IGTS pipeline facilities. The Plan will be followed to prevent or mitigate any releases which may occur.

## 1.1 PERSONAL SAFETY

Follow the safety practices that are detailed in the Site Specific Health and Safety Plan. *(Contractor will be required to provide a site specific health and safety plan prior to construction which must meet or exceed OSHA Regulations, Standard Industry Practices and Iroquois EH&S procedures. A template will be provided to the contractor upon request).*

## 1.2 TRAINING

A spill prevention briefing will be scheduled and conducted by an Iroquois Environmental Inspector prior to starting site activities (Refer to Procedure No. ENV-B-02, Pre-Job Environmental Training). The topics to be addressed at the briefing will include the following:

- Sources of spills, such as equipment failure and malfunction.
- Precautionary measures to prevent spills.
- Standard operating procedures for spill response.
- Spill control and clean up equipment, materials, and supplies to be maintained by the construction or maintenance crew during the construction or maintenance related activity.

Equipment operators and equipment maintenance personnel will be properly trained on the operation and maintenance of their equipment to prevent the accidental discharge or spill of fuel, oil, or lubricants.

## 1.3 MATERIAL & WASTE INVENTORY

The Hazardous Substance Inventory (HSI) sheet in Attachment "A" provides an anticipated inventory of oils and hazardous substances to be utilized during construction activities which, if released, may pose a threat to human health or the environment. In addition, the HSI provides the Reportable Quantity (RQ) for each of these materials. Material Safety Data Sheets (MSDS) for each of these chemicals is presented in Attachment A following the HSI.

The List of Emergency Response Personnel will be completed by the Environmental Inspector (EI) prior to beginning work and updated as required during the project. The EI will work with Iroquois Environmental, Health & Safety Department to determine the (RQ)[2] for each material. The EI will also determine, in the event of a spill, the hazard classification under RCRA for each material.

[2] RQ-s for specific constituents can be found from one or more of the following:
1) 49 Code of Federal Regulations Part 172;
2) 40 Code of Federal Regulations Part 302;

Contract personnel will be familiarized with this Plan prior to initiating any on-site activities. Any materials brought to the site by contract crews will be inventoried, reported to the EI and managed in accordance with the guidelines in this Plan.

## 2.0 SPILL PREVENTION PROCEDURES

The preferred alternative is to prevent spills from happening. The Iroquois Manager of EH&S or his designee will review and approve, prior to the commencement of work, all storage, refueling, and equipment maintenance areas in accordance with this SPCC Plan. The Environmental Inspector will mark, with appropriate signs, designated areas for:

- Storage of fuels, lubricants, oils, chemicals and hazardous materials
- Refueling of equipment
- Equipment maintenance

### 2.1 EQUIPMENT AND INSPECTION

The Contractor will develop and attach layout drawings or sketches in Attachment A indicating the designated areas described in Section 2.0, the materials stored there, the location of nearest spill kits and response equipment, and the distance to the nearest water body or conveyance (i.e. storm drains, ditches). The contractor will provide the site specific security plan for oil and hazardous material storage areas in Attachment A of this SPCC Plan. Hazardous and PCB contaminated wastes will be stored in a fenced and locked location. Fuel storage areas (including valves and switches) will be secured to minimize tampering and accidental releases by unauthorized personnel. The Contractor shall take the following precautions to ensure that a release of oil and hazardous substances is prevented or contained:

#### 2.1.1 Equipment Inspection, and Maintenance -

(1) All equipment maintenance will be performed in designated areas as specified within this SPCC.

(2) The supervisor of the construction or maintenance crew will develop a written schedule for inspection and maintenance of equipment.

(3) The supervisor of the construction or maintenance crew will provide a written description of equipment maintenance work to be performed to Iroquois Environmental, Health & Safety and Engineering Departments prior to commencing work.

3) MSDS documents; or
4) Iroquois Procedures Manual in Attachment C and D.

(4) The equipment maintenance crew will assess the general condition of containers, valves, lines and hoses. All deteriorated parts will be promptly repaired or replaced.

(5) The equipment maintenance crew will take precautionary measures when performing equipment maintenance activities. e.g. Place absorbent pads (or equivalent equipment) on the ground beneath the equipment when changing crankcase oil, repairing hydraulic lines, or adding coolant to construction equipment.

### 2.1.2 Containers

(1) All containers 55-gallons or greater shall be stored on pallets and surrounded with secondary containment.

(2) Secondary containment will include, but will not be limited to: temporary earthen berms with polyethylene underlining the entire contained area with a minimum of 10 mil thickness or a portable containment system constructed of steel, PVC or other suitable material.

(3) Containment areas shall be capable of containing 110% of the volume of material stored in these areas.

(4) All container storage areas shall be inspected daily for leaks and deterioration.

(5) Leaking and/or deteriorated containers shall be replaced as soon as the condition is first detected and cleanup measures will be implemented to remediate all contamination.

(6) No incompatible materials shall be stored in the same containment area.

(7) No storage area shall be unattended for periods longer than one (1) day.

### 2.1.3 Tanks

(1) The Contractor shall operate only those tanks for fuel and material storage which meet the requirements and regulations specified in the contract agreement and shall be surrounded with secondary containment.

(2) Self-supporting tanks shall be constructed of carbon steel or other materials compatible with the contents of each tank.

(3) All tanks will be elevated a minimum of two feet above grade and inspected daily for leaks and/or deterioration.

(4) Vehicle mounted tanks shall be equipped with flame/spark arrestors on vents to ensure that self ignition does not occur.

(5) Tanks will not be used to store incompatible materials in sequence unless first thoroughly decontaminated.

(6) Any tank utilized for storing different products between construction locations will be thoroughly decontaminated prior to refilling.

## 2.2 DESIGNATED STORAGE, REFUELING, AND EQUIPMENT AREAS

The Iroquois Manager of EH&S or his designee will review and approve all storage, refueling, and equipment maintenance areas prior to commencing work.

**The Iroquois Environmental, Health & Safety Department must be notified immediately if any of the setbacks or restrictions in Section 2.2 can not be achieved. Ultimately, per FERC requirements, exceptions to these setback or restrictions can only be granted by the Environmental Inspector, Government Authorities, and/or the FERC depending on the situation. Please refer to Part IV.A.1 (Preconstruction Planning) in the 2003 FERC Wetland and Waterbody Construction and Mitigation Procedures.**

### 2.2.1 Equipment Parking

(1) All equipment parked overnight shall be at least 100 feet from the edge of wetlands and watercourses.

### 2.2.2 Storage Areas for Hazardous Materials (i.e. Fuel, Lubricating Oils, and Chemicals)

(1) Shall be at least 100 feet from streambanks, wetland boundaries, wells, or springs.

(2) Shall be located at least 200 feet from private water supplies (wells or springs).

(3) Shall be located at least 400 feet from public water supplies (wells or springs)

(4) Shall be located outside of a wellhead protection zone.

### 2.2.3 Refueling and Maintenance Areas:

(1) Shall be located at least 100 feet from streambanks and wetland boundaries.

(2) Shall be located at least 200 feet from private water supplies (wells and springs).

(3) Shall be located at least 400 feet from public water supplies (wells or springs).

(4) Shall not be located within a wellhead protection zone.

(5) Shall not be located within a municipal watershed.

(6) Fuel trucks transporting fuel to on-site equipment shall only travel on approved access roads.

## 3.0 MITIGATIVE MEASURES

The construction or maintenance crew will have a readily accessible supply of containment and absorbent material capable of responding to a small spill. The recommended equipment and containment devices include the following, or equivalent:

- Dikes, berms, or retaining walls sufficiently impervious to contained spilled fluids.
- A quantity of absorbent and barrier materials determined by the contractor to be sufficient to capture the largest, reasonably foreseeable spill.
- A quantity of disposable drums (e.g. 55-gallon type) or containers suitable for handling and transporting contaminated materials.
- Curbing.
- Culverting, gutters, or other discharge systems.
- Weirs, booms, or other barriers.
- Spill diversion or retention ponds.
- Sumps and collection systems.

Construction vehicles and equipment shall carry appropriate spill containment equipment and materials (e.g., spill kits with the capacity of absorbing up to five gallons of liquid, weighing less than 10 pounds and can fit beneath the operator's seat on construction equipment).

All service vehicles used to transport lubricants and fuel must be equipped with an emergency response kit. At a minimum this kit must include:

- ten, 48"x3" oil socks,
- five, 17"x17"oil pillows,
- one, 10'x4" oil boom,
- twenty, 24"x24" oil mats,
- garden size, 6 mil, polyethylene bags,
- ten pair liquid proof gloves compatible with materials on site, and
- one, 55-gallon polyethylene open-head drum.

In addition, a smaller chemical response kit shall be available which contains:

- one bag of loose chemical pulp,
- two to three, 17"x 17" chemical pillows,
- two, 48"x3" chemical socks,
- five, 18"x18" adsorbent mats,
- garden size, 6 mil, polyethylene bags,
- ten pair liquid proof gloves compatible with materials on site,
- one, 30-gallon polyethylene open-head drum, and
- hazardous waste labels.

Finally, each refueling vehicle shall have a sufficient number of shovels, brooms, 10 mil polyethylene sheeting, and fire protection equipment to contain a moderate oil/fuel spill.

During refueling the CONTRACTOR will take appropriate measures to reduce the risk of a spill.

- Do not overfill tanks.
- Place absorbent materials under fuel nozzle while fueling equipment.
- Wipe fuel nozzle when fueling is complete.

The area beneath loading/unloading locations shall be inspected by the CONTRACTOR for spills before and after each use. Corrective measures shall be implemented if spills occur.

## 3.0 EMERGENCY RESPONSE PROCEDURES

This section provides a generic description of emergency response procedures to be performed to address oil and hazardous substance releases at the site. Each response will vary depending upon the nature and extent of the incident. However, the general protocols outlined in this document will be followed.

### 3.1 CONTRACTOR RESPONSIBILITIES

(1) The Contractor must designate both an Emergency Coordinator (EC) and an Alternate EC for the site.

(2) The Contractor is responsible for cleaning and addressing all spills which occur as a result of their operations.

(3) For small or “de minimis” spills (less than the Reportable Quantity), external notification requirements of this Plan need not be followed. However, this does not relieve the Contractor from correcting these releases in an environmentally sound manner.

(4) The Contractor shall supply necessary manpower and equipment to address releases resulting from their operations.

(5) The Contractor is responsible for immediately notifying the IGTS Chief Inspector of any spills.

### 3.2 IGTS RESPONSIBILITIES

(1) IGTS will designate both an Emergency Coordinator (EC) and an Alternate EC for the site.

(2) IGTS representatives shall be responsible for notifying appropriate agencies of releases in excess of RQ’s, including follow-up written notification.

(3) IGTS will provide supporting personnel and equipment to address RQ releases.

(4) IGTS shall be responsible for contracting outside remedial response firms and emergency response teams if their services are required.

## 3.3 EMERGENCY COORDINATOR AND CHAIN-OF-COMMAND

The IGTS Chief Inspector shall be designated as the Emergency Coordinator (EC) for the site. The Environmental Inspector, if applicable, shall assist the Chief Inspector as the Alternate EC. Table 2 (Attachment B of this SPCC Plan) provides a list of Iroquois and the Contractor's primary and alternate ECs for the locations, including their duties, home addresses and phone numbers. In addition, the table provides a list of the Contractor's employees who may be called upon to address small and contained releases as part of normal operating practices. This table must be completed by both IGTS and the CONTRACTOR.

## 3.4 PRE-DISTURBANCE REQUIREMENTS

The Environmental, Health & Safety Department will include the following information in the Environmental Clearance Package (refer to Procedure No. ENV-A-01):

(1) A list of approved spill response contractors in the vicinity of the work.

(2) A list of approved waste transporters and disposal sites for both hazardous and non-hazardous wastes.

Prior to commencing the work, the Environmental Inspector will:

(1) Prepare a written inventory of lubricants, fuels, and other materials that will be stored within the designated storage areas during the construction or maintenance related activity in Table 1 in Attachment A. Provide the MSDS for each material and include in Attachment A.

(2) Prepare a spill potential analysis summary as part of Table 1 in Attachment A.

(3) Contact the Environmental, Health & Safety Department to determine the reportable spill quantity for each material on the inventory.

(4) Determine, in the event of a spill, the hazard classification under RCRA for each material on the inventory. Refer to Procedure No. ENV-D-21.

(5) Prepare a list of the type, quantity, and location (including any designated storage sites or trailers) of containment and cleanup equipment to be available during the construction or maintenance related activity. The list

will include the procedures and mitigative measures to be used in case of a spill.

## 3.5 DUTIES OF CHIEF ENVIRONMENTAL INSPECTOR

The duties of the Chief Environmental Inspector or his Alternate are:

(1) Determine the source, character, amount and extent of the release or incident.

(2) Assess the potential hazards to the site, environment and neighboring community due to the incident, including possible toxic gases, hazardous runoff, etc.

(3) Sound an alarm and/or evacuation command to alert personnel, when required.

(4) Report releases to the IGTS Construction Project Manager, the Chief Environmental Inspector, or the spread assistant Chief EI.

(5) Contact outside remediation services or local emergency response teams to assist with incident or injuries too serious to be addressed by the contractor or IGTS personnel.

(6) Contact Local Emergency Planning Committees (LEPC) and neighboring industries, if necessary, for assistance or to report off-site releases.

(7) Commit manpower and equipment for minor incidents which can be reasonably corrected by IGTS and Contractor personnel.

(8) Direct remediation efforts to contain and control releases in accordance to this Plan.

(9) Document the remedial effort, including taking photographs wherever possible.

(10) Coordinate cleaning and disposal activities, including recovering usable products from the release.

(11) Ensure that all emergency equipment used during the incident is clean and fit for use prior to placing these devices back into service. Ensure that spent response equipment and materials are replaced when necessary.

(12) Generate a Spill Report Form.

(13) Where necessary, and with the assistance of IGTS Corporate Communications, inform local media of the incident.

# 4.0 EMERGENCY AND PERSONNEL PROTECTION EQUIPMENT

Table 3 (Attachment B of this SPCC Plan) provides a list of both Emergency Response and Personnel Protection Equipment located in the project area which can be used in the event of a major spill or fire. This table must be completed by the Contractor.

# 5.0 RELEASE NOTIFICATION PROCEDURES

The following section provides a generic description of the notification procedures to be followed in the event of a spill.

## 5.1 SPILL/RELEASE REPORTING PROCEDURES

Iroquois approved Spill/Release Reporting Procedure (ENV-E-04) is provided as Attachment D of this SPCC Plan and should be referred to and followed in the event of a spill/release.

Upon discovery of a spill, immediately:

(1) Stop operation of affected equipment.

(2) Close any open valves.

(3) Stop any leaks, if possible.

(4) Alert other personnel in the area to the occurrence of a spill.

(5) Notify appropriate personnel as soon as practicable.

(6) Internal Notifications

Oil spills and hazardous substance releases in excess of the RQ are to be immediately reported to the IGTS Construction Project manager, the spread manager, and the Chief EI.

A Spill Report Form (Attachment C of this SPCC Plan), will also be completed and forwarded to the VP of Engineering and Manager of EH&S as soon as technically feasible by the EC. The EC, with the assistance of the Manager of EH&S, will determine if the release constitutes a:

(1) Reportable Quantity under CERCLA,

(2) Reportable release under the Clean Water Act or RCRA, or

(3) Reportable Threshold Quantity under SARA Title III.

If reporting is necessary, the Manager of EH&S or his or her designee shall be responsible for immediately contacting the appropriate federal and state authorities.

## 5.2 EXTERNAL NOTIFICATIONS

All off-site releases of hazardous materials shall be reported verbally to the Local Emergency Planning Committee (LEPC) by Iroquois Manager of EH&S. In making a determination whether an off-site release has occurred, the EC and the Manager of EH&S will also consider all resulting air emissions. Names, addresses, and phone numbers of the appropriate LEPC parties are provide below:

**Name:** _____

**Organization:** _____

**Phone Number:** _____

The Chief EI is responsible for making follow-up written notification to the LEPC.

## 5.3 Emergency Response Contractors

The Manager, EH&S or his designee is responsible for getting an emergency response cleanup contractor. Iroquois Chief EI will oversee any cleanup and will determine when and if the cleanup is complete.

### 5.4 Local Emergency Response Teams

The Chief Inspector may also call on the following local emergency response teams should their assistance be required:

| | Organization Name | Telephone Number |
|---|---|---|
| Emergency Medical Services | | |
| Ambulance: | | |
| Hospital: | | |
| Fire Department: | | |
| Police or Sheriff's Department: | | |

## 6.0 CLEAN-UP PROCEDURES

The following section outlines specific procedures to be followed by the CONTRACTOR and IGTS when addressing releases.

## 6.1 OIL/FUEL SPILLS

(1) Small spills and leaks must be remediated as soon as feasible. Use adsorbent pads wherever possible to reduce the amount of contaminated articles.

- The Environmental Inspector will determine if the spill is small enough that it can be safely handled by the construction or maintenance crew.
- The crew will utilize on-site equipment to pump and/or excavate the spilled material and contaminated soil.
- If the spill is too large to be safely handled by the construction or maintenance crew, an approved spill response contractor will be called in to clean up the spill.

(2) Restrict spills to the containment area if possible by stopping or diverting flow from the oil/fuel tank.

- All spills shall be contained on the right-of-way or in designated equipment storage areas, if possible.
- If on water, deploy a spill boom across the flow direction of the floating material.
- If on land, install a dike, berm, or other containment structure across the flow direction to contain the spilled material.
- Immediately obtain a copy of the MSDS for the material spilled.

(3) If the release exceeds the containment system capacity, immediately construct additional containment using sandbags or fill material. Every effort must be made to prevent the seepage of oil into soils and waterways.

(4) Once a spill is contained, cleanup procedures will begin immediately.

Small Spills

a) The IGTS Environmental Inspector will determine if the spill is small enough that it can be safely handled by the construction or maintenance crew.

b) The crew will utilize on-site equipment to pump and/or excavate the spilled material and contaminated soil.

Large Spills

a) If the spill is too large to be safely handled by the construction or maintenance crew, an approved spill response contractor (from the list in the Environmental Clearance Package) will be called in to clean up the spill.

(5) Decontaminate the equipment used during the containment and cleanup operation (e.g., use rags and cleaning agents to remove excess spill material). If the equipment cannot be properly cleaned it will be treated as a waste.

(6) All spilled material, contaminated soil, absorbent material, and other contaminated material will be containerized in a manner consistent with the spilled material's hazard characterization.

(7) If a release occurs into a facility drain or nearby stream, immediately pump any floating layer into drums. For streams, place a barrier between the release area and the site boundary. This barrier may include but is not limited to oil booms, hay bales, under flow dams or

means to contain the release. As soon as possible, excavate contaminated soils and sediments.

(8) After all recoverable oil has been collected and drummed, place contaminated soils and articles in containers if required by the Iroquois representative or regulations.

(9) For larger quantity of soils, construct temporary waste piles using plastic liners. Plastic-lined roll-off bins should be leased for storing this material as soon as feasible.

(10) Dispose of oily soils and contaminated articles in accordance with applicable federal, state and local regulations.

(11) Decontaminate all emergency response equipment used during the incident before storing. See part 6.4 of this Plan.

(12) Document and report activities to the Director of EH&S.

## 6.2 HAZARDOUS SUBSTANCE RELEASES

(1) Identify the material and quantity released.

(2) Block off drains and containment areas to limit the extent of the spill. Never use water to disperse the spill.

(3) Ensure that Personnel Protection Equipment and containers are compatible with the material released.

(4) Collect and reclaim, if possible, as much of the spill using a hand pump or similar device. Containerize contaminated soils. Never place incompatible materials in the same drum or other container.

(5) Take a sample of the substance for analysis and waste profiling. Contact the Director of EH&S (See Attachment B of this SPCC Plan) for scheduling analytical work.

(6) Place a hazardous waste label with appropriate waste code on the drums containing hazardous waste contaminated materials. Move drum to secure staging or storage area.

(7) Decontaminate all equipment in a contained area. Collect and containerize decontamination fluids. See part 6.4 of this Plan.

(8) Document and report activities to the Director of EH&S as soon as feasible.

## 6.3 EQUIPMENT CLEANING/STORAGE

(1) Upon completion of remedial activities, the Contractor shall be responsible for disposing and/or decontaminating emergency response equipment. An approved waste management plan must be followed. See Attachment C of this SPCC Plan for a blank Waste Management Plan form (The contractor will be responsible for providing and filling out the information in this plan).

(2) The Contractor shall be responsible for replacing all spent emergency response equipment prior to resuming construction activities.

(3) Decontamination rinse fluids shall be collected and managed in the same manner as wastes generated, including performing necessary analyses.

(4) Reusable personnel protection equipment will be tested and inventoried prior to being placed back into service.

## 6.4 DISPOSAL OF CONTAMINATED MATERIALS/SOILS

(1) The Contractor shall be responsible for the proper disposal of wastes generated by their actions, including obtaining applicable authorizations, registrations, and/or EPA/State I.D. Numbers. An approved waste management plan must be followed. See Attachment C of this SPCC for a blank Waste Management Plan form (The contractor will be responsible for providing and filling out the information in this plan).

(2) All contaminated articles and soils recovered during a release event shall be properly handled and stored in approved DOT containers.

(3) In accordance to the Company's policy, all wastes generated as a result of spill response activities shall be analyzed to determine if hazardous, unless knowledge of contaminant(s) is applied to classify these wastes/spill materials as hazardous.

(4) Those wastes determined to be hazardous shall be properly labeled, profiled and manifested to an authorized hazardous waste treatment, storage, and disposal facility.

(5) IGTS may utilize a remediation firm or a waste management firm to initiate waste disposal activities. At no time will hazardous waste be stored on-site for a period exceeding 90 days.

(6) Hazardous wastes shall be stored in a secured location (i.e. fenced, locked, etc) until such time as this material is transported off-site. At no time will hazardous waste be stored for a period exceeding 90 days.

(7) Non-hazardous, oil-contaminated soils and articles shall be properly disposed at authorized non-hazardous land disposal facilities. While on-site, these materials will be managed in accordance with the procedures outlined previously, and with applicable federal, state and local regulations.

(8) Depending upon quantity, lined roll-off bins shall be leased to temporarily store contaminated soils prior to disposal.

# ATTACHMENT A

## TABLE 1: HAZARDOUS SUBSTANCE INVENTORY

| Material | Quantity (gallons) | Storage Location | Reportable Quantity (include reference) |
|---|---|---|---|
| **Oil/Fuel:** | | | |
| **Fuel Oil** | | | |
| **Motor Oil** | | | |
| | | | |
| | | | |
| **Commercial Chemicals:** | | | |
| **None** | | | |
| | | | |
| | | | |
| | | | |
| | | | |
| | | | |
| **Hazardous Wastes:** | | | |
| **None** | | | |
| | | | |
| | | | |
| | | | |
| | | | |

# MATERIAL SAFETY DATA SHEETS

# DESIGNATED AREAS FOR PARKING, REFUELING, AND STORAGE

# SITE-SPECIFIC SECURITY PLANS

# ATTACHMENT B

## TABLE 2: LIST OF EMERGENCY RESPONSE PERSONNEL

| Name | Job Description | Address | Phone Number |
|---|---|---|---|
| **EMERGENCY COORDINATOR** | | | |
| **IGTS:** | | | |
| | | | |
| | | | |
| **CONTRACTOR:** | | | |
| | | | |
| | | | |
| **ALTERNATIVE EMERGENCY COORDINATOR** | | | |
| **IGTS:** | | | |
| | | | |
| | | | |
| **CONTRACTOR:** | | | |
| | | | |
| | | | |
| **EMERGENCY RESPONSE PERSONNEL** | | | |
| | | | |
| | | | |
| | | | |
| | | | |
| | | | |

## TABLE 3: EMERGENCY RESPONSE AND PERSONNEL PROTECTION EQUIPMENT

| Equipment | Quantity | Location |
|---|---|---|
| **SPILL RESPONSE EQUIPMENT:** | | |
| Emergency Spill Response Kit | | On Fuel Truck |
| Chemical Response Kit | | In Storage Trailer |
| | | |
| | | |
| | | |
| **FIRE PROTECTION EQUIPMENT:** | | |
| Fire Extinguishers | | On Welding Rigs |
| Fire Extinguishers Trailers | | In Office and Storage |
| | | |
| **PERSONNEL PROTECTION EQUIPMENT:** | | |
| Hard Hats | | Individual Issue |
| Safety Glasses | | Individual Issue |
| Rubber Gloves | | In Chemical Response Kit |
| Tyvek Suits | | In Chemical Response Kit |
| | | |

THIS PAGE TO BE COMPLETED BY CONTRACTOR

Iroquois
GAS TRANSMISSION SYSTEM
IROQUOIS PIPELINE OPERATING COMPANY, OPERATOR

## ENVIRONMENTAL ASSISTANCE CONTACT SHEET

| Name/Location: | Phone Numbers | | |
|---|---|---|---|
| District Manager/Address: | | | |
| | | | |
| | | | |
| | | | |
| District Supervisor/Address: | | | |
| | | | |
| **Corporate Contacts:** | | | |
| ***Environmental Affairs*** | | | |
| | | | |
| | | | |
| | Office: | Home: | Beeper/Car: |
| | Office: | Home: | Beeper/Car: |
| | Office: | Home: | Beeper/Car: |
| IF IT IS NOT POSSIBLE TO LOCATE ANY OF THE ABOVE, CALL GAS CONTROL AT 203-944-7040 FOR ASSISTANCE IN LOCATING THE ABOVE INDIVIDUALS. | | | |

Last Revised:

# ATTACHMENT C

# WASTE SPECIFIC MANAGEMENT PLAN

# SPILL REPORT FORM

SPILL REPORT FORM IROQUOIS GAS TRANSMISSION SYSTEM

Date:_____ Time of Spill Occurrence: _____ Weather Conditions _____

Name/Title of first observer: _____

Location of Spill:

_____

_____

Type and source of material spilled: _____

_____

Estimated Quantity Spilled:

_____

Circumstances causing spill:

_____

If spill is into water, is a sheen present

_____

Approximate size of area affected by spill:

_____

_____

Has spill left Company property? _____

_____

Is spill under control? If not, is there a potential for the spill to leave the Company property?

_____

_____

_____

Time that spill cleanup was initiated. Methods used for cleanup.

_____

_____

_____

_____

_____

**SPILL REPORT FORM (continued)**

Personnel notified (names, phone numbers, date and time, including regulatory representatives, if appropriate)

Iroquois Environmental Department:_____

NYSDEC (1-800-457-7632):_____

NRC (1-800-424-8802): _____

Emergency Responders required (if yes, list name of responders called):_____

_____

Name and phone number of Emergency Coordinator:_____

_____

Comments:_____

_____

_____

_____

Spill Report sent to:

Iroquois Environmental Department:_____ Date: _____

Other (list) _____ Date: _____

_____ Date: _____

Signature of Emergency Coordinator/Date:

_____

_____

# ATTACHMENT D

Iroquois
GAS TRANSMISSION SYSTEM
IROQUOIS PIPELINE OPERATING COMPANY, OPERATOR

# Environmental Procedure Manual

| Date | Sheet | of | Procedure No. | Revision |
|---|---|---|---|---|
| 10/01/2004 | 1 | 12 | ENV-E-04 | 5 |

Subject:

SPILL/RELEASE REPORTING PROCEDURE

## 1.0 INTRODUCTION

This document outlines the reporting procedures to be undertaken in the event of a spill or release of chemicals or petroleum product from any Iroquois facility or right-of-way.

This document is intended for use by field personnel performing operation and maintenance activities on the Iroquois pipeline, and at compressor stations, odorant stations, meter stations, or along the pipeline right-of-way. It outlines procedures for documenting important information about releases in the field and reporting that information to Iroquois Environmental and Right-of-Way personnel. It is also for use by office personnel performing environmental, engineering or management activities associated with spill reporting to agencies, landowners and other non-Iroquois personnel.

## 2.0 PERSONAL SAFETY

Follow the safety practices that are outlined in the Safety and Health Manual for hazardous material handling and storage and the Material Safety Data Sheet (MSDS) for the product spilled or released.

## 3.0 NOTIFICATIONS

Various internal, local, state and federal notifications may be required as described in Section 6 of this procedure.

## 4.0 EQUIPMENT AND MATERIALS NEEDED

A Spill Report Form is attached to this procedure. Equipment to measure and sketch the release area should be available as well as Material Safety Data Sheets for all chemical or petroleum products.

Prepared by RES

Compliance Coordinator

Manager, Environmental, Health & Safety

Engineering Representative

Iroquois
GAS TRANSMISSION SYSTEM
IROQUOIS PIPELINE OPERATING COMPANY, OPERATOR

**Environmental Procedure Manual**

| Date | Sheet | of | Procedure No. | Revision |
|---|---|---|---|---|
| 10/01/2004 | 2 | 12 | ENV-E-04 | 5 |

Subject:

SPILL/RELEASE REPORTING PROCEDURE

## 5.0 REFERENCES

| Company Name | Document Name | Document Number |
|---|---|---|
| IPOC | *Emergency Operating Procedures Manual (EOP)* | Appendix E |
| IPOC | *Safety and Health Manual* | NA |
| IPOC | *Spill Prevention, Containment, and Control Procedures for Pipeline Construction & Operation* | ENV-E-01 |
| IPOC | *Emergency Preparedness Procedures and Spill Prevention, Control and Countermeasures Plan – Wright Meter Station & Compressor* | ENV-E-07 |
| IPOC | *Emergency Preparedness Procedures and Spill Prevention, Control and Countermeasures Plan – Croghan Meter Station & Compressor* | ENV-E-08 |
| IPOC | *Emergency Preparedness Procedures and Spill Prevention, Control and Countermeasures Plan – Athens Compressor Station* | ENV-E-10 |
| IPOC | *Spill Response Plan and Spill Prevention, Control and Countermeasures Plan Preparation and Update* | ENV-E-13 |
| IPOC | *Emergency Preparedness Procedures and Spill Prevention, Control and Countermeasures Plan – Boonville Compressor* | ENV-E-16 |
| IPOC | *Emergency Preparedness Procedures and Spill Prevention, Control and Countermeasures Plan – Dover Compressor* | ENV-E-17 |
| NYSR | *Regulation List of Hazardous Substances* | 6NYCRR |
| USEPA | *Designation, Reportable Quantities and Notification* | 40 CFR 302 |
| USEPA | *Immediate Notice of Certain Hazardous Material Incident* | 49 CFR 171.15 |

Iroquois
GAS TRANSMISSION SYSTEM
IROQUOIS PIPELINE OPERATING COMPANY, OPERATOR



## 6.0 INSTRUCTIONS

### 6.1 Notification Responsibilities

Each facility has their own unique Spill Prevention, Control and Countermeasures Plan (SPCC), refer to the appropriate facility's Plan for detailed information.

Any Iroquois or contractor employee who observes a spill or release to the environment must notify the Emergency Spill Coordinator who will then notify Gas Control and initiate the notification tree found in the Emergency Operating Procedure Manual, Appendix E.

Follow this procedure for any spill or release of any chemical or petroleum product regardless of its quantity or location. Verbal notifications will be made either in person, by telephone or by radio. Releases may include, but are not limited to, acids, cleaners, contaminated water or condensation, fuels, lubricants, mercury, methanol, paints or solvents.

### 6.2 Internal and Landowner Notifications

Responsibilities and steps for ensuring adequate internal and landowner notifications are outlined in the following sequence. External agency notifications are discussed in subsequent sections.

Any Iroquois or contractor employee who first observes a spill or release to the environment must notify immediately the Emergency Spill Coordinator.

1. If the Emergency Spill Coordinator or designee is not available, then notification will be made to the next highest level until notification has been made. In any case, the Manager, Environmental, Health & Safety or his or her designee will be the only person to determine if a release is reportable to outside agencies and to notify environmental agencies. The Right-of-Way Department will notify landowners if appropriate.
2. The person notifying the Manager, Environmental, Health & Safety and the Manager, Right-of-Way will also fax or deliver a completed Spill Report Form (see attached) to each of these people. If this is not possible immediately, contact the Manager, Environmental, Health & Safety and Manager, Right-of-Way and provide as much of the information requested on the Spill Report Form as possible.
3. The person notifying the Manager, Environmental, Health & Safety and Manager, Right-of-Way will ensure that a copy of the Material Safety Data

Sheet (MSDS) for the released material, and a sketch of the release area, are attached to the Spill Report Form.

## 6.3 Agency Notifications and Deadlines

The following subsections describe verbal and written notification requirements for various types and quantities of releases in Connecticut and New York State. In addition to the environmental agency requirements tabulated below, contact local police, fire or emergency officials if a threat of fire, explosion or other danger to the public is involved, especially near sensitive areas such as schools, hospitals, nursing homes, shopping centers, busy roadways or apartment buildings.

Hazardous substance releases listed in 40 CFR Part 302 (and 6 NYCRR Part 597 in New York State) also require contacting Local Emergency Planning Committees (LEPCs). Since the pipeline crosses many localities in Connecticut and New York State, and since LEPC contacts change frequently, these are not listed in this procedure. If needed, the State Emergency Response Commissions (SERCs) listed in the tables can provide current LEPC contact information.

### 6.3.1 Connecticut Release Reporting

| Released Material | Media Affected | Amount | Verbal Deadline | Written Report Deadline | Notification Codes |
|---|---|---|---|---|---|
| Oil or other petroleum | Water | Any | Immediate | 48 hours | A |
| | | An amount that causes a visible film/sheen; or causes violation of water quality standards; or causes formation of sludge or emulsion | Immediate | N/A | B |
| | | 1,000 gallons or more in one spill event or 2 or more smaller spill events in any 12 month period | N/A | 30 days[1] | E |
| | Soil or gravel | Any | Immediate | 48 hours | A |
| | Contained spills indoors or outdoors | A spill greater than a pint in volume | Immediate | 48 hours | A |
| | Contained spills indoors or outdoors | A spill less than a pint in volume shall not be reported provided it does not contaminate soil or gravel or enter into water. | N/A | N/A | N/A |
| Other Chemicals or Products | Soil, Water or Air | Any | Immediate | 48 hours | A |
| | Contained spills indoors or outdoors | Any | Immediate | 48 hours | A |
| Hazardous Substances (including Hazardous Wastes) listed in CERCLA 40 CFR 302 (See Section 6.3.3) | Soil or Water | An amount equal or exceeding the substances assigned reportable quantity | Immediate | 48 hours (except no written report is required by the National Response Center) | A, B, C, D |
| Hazardous Materials or Wastes During Transport | Any media or spill location | Any incident causing the damage or injuries specified in 49 CFR 171.15[2] | Immediate | 30 Days[3] (report submitted to the USDOT) | B |

Iroquois
GAS TRANSMISSION SYSTEM
IROQUOIS PIPELINE OPERATING COMPANY, OPERATOR

# Environmental Procedure Manual

| Date | Sheet | of | Procedure No. | Revision |
|---|---|---|---|---|
| 10/01/2004 | 6 | 12 | ENV-E-04 | 5 |

Subject:

SPILL/RELEASE REPORTING PROCEDURE

**Note: The Environmental, Health & Safety Department will notify agencies during working hours. The Environmental, Health & Safety Department will also forward written reports to agencies.**

**Notification Codes**

A. Connecticut Department of Environmental Protection
Oil and Chemical Spill Response Division
State Office Building
79 Elm Street
Hartford, CT 06106-5127
Phone: (860) 424-3338

B. National Response Center
Phone: (800) 424-8802

C. Local Emergency Planning Committee (LEPC)
To obtain information on a specific area of the pipeline, contact the State Emergency Response Commission to determine the LEPC and contact information in your area.

D. Connecticut State Emergency Response Commission
State Office Building, Room 146
165 Capitol Avenue
Hartford, CT 06106
Phone: (860) 424-3338Regional Administrator

E. USEPA – Region 1
1 Congress Street
Suite 1100
Boston, MA 02114-2023
Phone: (617) 918-1111

### 6.3.2 New York State Release Reporting

| Released Material | Media Affected | Amount | Verbal Deadline | Written Report Deadline | Notification Codes |
|---|---|---|---|---|---|
| Oil or other petroleum | Water | An amount that causes a visible film/sheen; or causes violation of water quality standards; or causes formation of sludge or emulsion | Immediate | N/A | A, B |
| | | 1,000 gallons or more in one spill event or 2 or more smaller spill events in any 12 month period | N/A | 30 days[4] | E |
| | Soil or gravel | Any | 2 hours | 48 hours | A |
| | Contained spills indoors or outdoors | Small spills do not need to be reported unless they contaminate soil, gravel or water. | NA | NA | NA |
| Hazardous Substances (including Hazardous Wastes) listed in CERCLA 40 CFR Part 302 (See Section 6.3.3) | Soil or Water | An amount equal or exceeding the substances assigned reportable quantity | Immediate | ASAP (except no written report is required by the National Response Center) | A, B, C, D |

Iroquois
GAS TRANSMISSION SYSTEM
IROQUOIS PIPELINE OPERATING COMPANY, OPERATOR

# Environmental Procedure Manual

| Date | Sheet | of | Procedure No. | Revision |
|---|---|---|---|---|
| 10/01/2004 | 8 | 12 | ENV-E-04 | 5 |

Subject:

SPILL/RELEASE REPORTING PROCEDURE

| Released Material | Media Affected | Amount | Verbal Deadline | Written Report Deadline | Notification Codes |
|---|---|---|---|---|---|
| Hazardous Substances listed in 6 NYCRR 597 (See Section 6.3.3) (Note: New York State has published a list of hazardous substances that differs from the EPA list found in 40 CFR Part 302.) | Soil, Water or Air | An amount equal or exceeding the substances assigned reportable quantity | Immediate | N/A | A |
| Hazardous Materials or Wastes During Transport | Any media or spill location | Any incident causing the damage or injuries specified in 49 CFR 171.15[5] | Immediate | 30 Days[6] (report submitted to the USDOT) | B |

**Note: The Environmental, Health & Safety Department will notify agencies. The Environmental, Health & Safety Department will also forward written reports to agencies.**

**Notification Codes**

A. New York State Department of Environmental Conservation
24-hour Spill Hotline
(800) 457-7362 or (518) 457-7362

B. National Response Center: (800) 424-8802

C. Local Emergency Planning Committee (LEPC)
To obtain information on a specific area of the pipeline, contact the State Emergency Response Commission to determine the LEPC and contact information in your area.

D. New York State Emergency Response Commission
1220 Washington Street
Building 22, Suite 101
Albany, NY 12226-9930
Phone: (800) 572-1700

E. Regional Administrator
USEPA – Region 2
290 Broadway
New York, NY 10007-1866
Phone: (212) 637-3000

### 6.3.3 Reportable Quantities

Releases of reportable quantities (RQs) of hazardous substances must be reported as tabulated in Sections 6.3.1 and 6.3.2 of this procedure. Any amount of a hazardous substance is a reportable quantity if released to the environment in Connecticut. Federal and New York State regulations list RQs for hundreds of substances. To determine whether a release is reportable, the Environmental, Health & Safety Department will refer to these lists and other information provided on the Spill Report Form. Reportability of New York State releases is to be determined based on the most stringent reportable quantity listed by New York State (6 NYCRR 597) or by the US Environmental Protection Agency (40 CFR 302 under the Comprehensive Environmental Response, Compensation, and Liability Act). RQs represent an amount released within 24 hours. The New York State list is often much more stringent than the EPA list, especially for releases to water.

The following table lists examples of RQs for several common substances. If it is necessary to determine the pounds of material released, multiply the volume released (gallons) by its density (pounds per gallon) listed in its Material Safety Data Sheet (MSDS).

Iroquois
GAS TRANSMISSION SYSTEM
IROQUOIS PIPELINE OPERATING COMPANY, OPERATOR

# Environmental Procedure Manual

| Date | Sheet of | Procedure No. | Revision |
|---|---|---|---|
| 10/01/2004 | 10 12 | ENV-E-04 | 5 |

Subject:

SPILL/RELEASE REPORTING PROCEDURE

| | Reportable Quantity (Pounds) | | |
|---|---|---|---|
| State | Connecticut | New York | |
| Environmental Media | Air/Land/Water | Air/Land | Water |
| **Hazardous Substance** | | | |
| Benzene (Solvents or Paint Thinner) | | 10 | 1 |
| Ethylene Glycol (not Propylene Glycol) | | 1 | 1 |
| Hydrochloric Acid | | 5,000 | 100 |
| Mercury | ANY | 1 | 1 |
| Methanol | | 5,000 | 1 |
| Methyl Ethyl Ketone | | 5,000 | 1 |
| Polychlorinated Biphenyls (PCBs) | | 1 | 1 |
| Sulfuric Acid | | 1,000 | 100 |
| Toluene or Xylene (Solvents or Paint Thinner) | | 1,000 | 1 |

## 7.0 DOCUMENTATION/REPORTING

Complete a Spill Report Form (see attached). Any follow-up written report to an agency may include an updated Spill Report Form, a sketch or photograph of the release area and an MSDS for the material released. Written information concerning any spills must be kept in the applicable SRP/SPCC Plan (ENV-E-13).

## 8.0 TRAINING

All personnel responsible for spill/release reporting must be trained to ensure compliance with this procedure. Iroquois Environmental Procedures ENV-B-01 and ENV-B-02 prescribe Annual Environmental Training and Pre-Job Environmental Training, respectively. Those procedures address spill/release reporting training.

---

[1] The following must be reported in writing to the USEPA Regional Administrator:

- Company name;
- Name of the owner/operator of the location;
- Location of the release;
- Date and year of initial facility operation;

- Maximum storage or handling capacity of the facility and normal daily throughput;
- Description of the facility, including maps, flow diagrams and topographic maps;
- A complete copy of the facility's SPCC Plan with any amendments;
- The cause(s) of such spill, include a failure analysis of system or subsystem in which failure occurred;
- The corrective actions and/or countermeasures taken, including adequate description of equipment repairs and/or replacements;
- Additional preventative measures taken or contemplated to minimize the possibility of reoccurrence; and
- Such information as the Regional Administrator may require pertinent to the plan or spill event.

[2] Any incident that occurs during the course of transportation (including loading, unloading and temporary storage) in which:

1) As a direct result of hazardous materials –
   a) A person is killed; or
   b) A person receives injuries requiring his or her hospitalization; or
   c) Estimated carrier or other property damage exceeds $50,000; or
   d) An evacuation of the general public occurs lasting one or more hours; or
   e) One or more major transportation arteries or facilities are closed or shut down for one hour or more; or
   f) The operational flight pattern or routine of an aircraft is altered; or
2) Fire, breakage, spillage, or suspected radioactive contamination occurs involving shipment of radioactive material; or
3) Fire, breakage, spillage, or suspected contamination occurs involving shipment of infectious substances (etiologic agents); or
4) There has been a release of a marine pollutant in a quantity exceeding 450 L (119 gallons) for liquids or 400 kg (882 pounds) or solids; or
5) A situation exists of such a nature (e.g., a continuing danger to life exists at the scene of the incident) that, in the judgment of the carrier, it should be reported to the National Response Center even though it does not meet the criteria in items 1, 2, or 3 above.

[3] Written reports to the US Department of Transportation must be made on DOT Form F 5800.1

[4] The following must be reported in writing to the USEPA Regional Administrator:

- Company name;
- Name of the owner/operator of the location;
- Location of the release;
- Date and year of initial facility operation;
- Maximum storage or handling capacity of the facility and normal daily throughput;
- Description of the facility, including maps, flow diagrams and topographic maps;
- A complete copy of the facility's SPCC Plan with any amendments;
- The cause(s) of such spill, include a failure analysis of system or subsystem in which failure occurred;
- The corrective actions and/or countermeasures taken, including adequate description of equipment repairs and/or replacements;
- Additional preventative measures taken or contemplated to minimize the possibility of reoccurrence; and

- Such information as the Regional Administrator may require pertinent to the plan or spill event.

[5] Any incident that occurs during the course of transportation (including loading, unloading and temporary storage) in which:

6) As a direct result of hazardous materials –
   a) A person is killed; or
   b) A person receives injuries requiring his or her hospitalization; or
   c) Estimated carrier or other property damage exceeds $50,000; or
   d) An evacuation of the general public occurs lasting one or more hours; or
   e) One or more major transportation arteries or facilities are closed or shut down for one hour or more; or
   f) The operational flight pattern or routine of an aircraft is altered; or
7) Fire, breakage, spillage, or suspected radioactive contamination occurs involving shipment of radioactive material; or
8) Fire, breakage, spillage, or suspected contamination occurs involving shipment of infectious substances (etiologic agents); or
9) There has been a release of a marine pollutant in a quantity exceeding 450 L (119 gallons) for liquids or 400 kg (882 pounds) or solids; or
10) A situation exists of such a nature (e.g., a continuing danger to life exists at the scene of the incident) that, in the judgment of the carrier, it should be reported to the National Response Center even though it does not meet the criteria in items 1, 2, or 3 above.

[6] Written reports to the US Department of Transportation must be made on DOT Form F 5800.1

# SPILL PREVENTION, CONTAINMENT, AND CONTROL PLAN

## DOVER GAS COOLER

### 146 Dover Furnace Road
### DOVER PLAINS, NEW YORK

### IROQUOIS GAS TRANSMISSION SYSTEM, L.P.
### MARKETACCESS PROJECT

### VERSION: MARCH 28, 2006

## Note:

**This document is a template for the preparation of an SPCC Plan. Site specific information must be included by the contractor in the plan appendices prior to implementation. The contractors must update the site specific information during construction as required.**

Approved and Released for Construction:

Manager of EH&S:_____ Date:_____

| | |
|---|---|
| DAF, KD<br>Prepared By | Manager, Environmental, Health & Safety |
| Compliance Coordinator | Engineering Representative |

# TABLE OF CONTENTS

1.0 INTRODUCTION ..... 1
1.1 PERSONAL SAFETY ..... 2
1.2 TRAINING ..... 3
1.3 MATERIAL & WASTE INVENTORY ..... 3
2.0 SPILL PREVENTION PROCEDURES ..... 4
2.1 EQUIPMENT AND INSPECTION ..... 4
2.1.1 EQUIPMENT INSPECTION, AND MAINTENANCE - ..... 4
2.1.2 CONTAINERS ..... 5
2.1.3 TANKS ..... 5
2.2 DESIGNATED STORAGE, REFUELING, AND EQUIPMENT AREAS ..... 6
2.2.1 EQUIPMENT PARKING ..... 6
2.2.2 STORAGE AREAS FOR HAZARDOUS MATERIALS (I.E. FUEL, LUBRICATING OILS, AND CHEMICALS) ..... 6
2.2.3 REFUELING AND MAINTENANCE AREAS: ..... 6
3.0 MITIGATIVE MEASURES ..... 7
3.0 EMERGENCY RESPONSE PROCEDURES ..... 8
3.1 CONTRACTOR RESPONSIBILITIES ..... 9
3.2 IGTS RESPONSIBILITIES ..... 9
3.3 EMERGENCY COORDINATOR AND CHAIN-OF-COMMAND ..... 10
3.4 PRE-DISTURBANCE REQUIREMENTS ..... 10
3.5 DUTIES OF CHIEF ENVIRONMENTAL INSPECTOR ..... 11
4.0 EMERGENCY AND PERSONNEL PROTECTION EQUIPMENT ..... 12
5.0 RELEASE NOTIFICATION PROCEDURES ..... 12
5.1 SPILL/RELEASE REPORTING PROCEDURES ..... 12
5.2 EXTERNAL NOTIFICATIONS ..... 13
6.0 CLEAN-UP PROCEDURES ..... 14
6.1 OIL/FUEL SPILLS ..... 14

6.2 HAZARDOUS SUBSTANCE RELEASES ..... 16
6.3 EQUIPMENT CLEANING/STORAGE ..... 17
6.4 DISPOSAL OF CONTAMINATED MATERIALS/SOILS ..... 17

**Attachment A: Hazardous Materials**

- Hazardous Substance Inventory (Table 1)
- Material Safety Data Sheets
- Designated Areas for Parking, Refueling, and Storage
- Site-Specific Security Plan

**Attachment B: Emergency Response**

- Emergency Response Agencies and Personnel (Table 2)
- On Site Emergency Response Equipment (Table 3)
- Environmental Assistance Contact Sheet

**Attachment C: Waste Management**

- Waste Management Plan

**Attachment D: Reporting Requirements and Forms**

- Spill Release and Reporting Procedure IGTS ENV-E-04
- Spill Report Form
- Hotline Alert Card

# 1.0 INTRODUCTION

Iroquois recognizes that it is essential to protect environment features within influence of the MarketAccess project during construction activities. This Spill Prevention, Containment, and Control ("SPCC")[1] Plan defines the procedures for prevention, containment, and control of potential spills during construction of this Project. This plan is required by the Federal Energy Regulatory Commission ("FERC") and is intended to meet the requirements of 40 CFR 112.

The MarketAccess project involves construction activities at two locations as follows:

*Brookfield Transfer Compressor Station:*

Installation of a new transfer compressor station and gas cooling facility at 60 High Meadow Road, Brookfield, Connecticut.

*Dover Compressor Station, Gas Cooler Addition:*

Installation of gas cooling facility at Iroquois' existing compressor station, 146 Dover Furnace Road in Dover, New York.

This SPCC plan has been prepared for the Dover Gas Cooler Project and is intended for use by company and contract personnel responsible for the implementation of the SPCC Plan. Site specific information must be provided by the contractor to complete Attachment A, B, and C of this report. The information in Attachment D will be provided by the Iroquois EH&S department. The Attachments are as follows:

**Attachment A: Hazardous Materials**

- Hazardous Substance Inventory (Table 1)
- Material Safety Data Sheets
- Designated Areas for Parking, Refueling, and Storage
- Site-Specific Security Plan

[1] 40 Code of Federal Regulations, Part 112

**Attachment B: Emergency Response**

- Emergency Response Agencies and Personnel (Table 2)
- On Site Emergency Response Equipment (Table 3)
- Environmental Assistance Contact Sheet

**Attachment C: Waste Management**

- Waste Management Plan

**Attachment D: Reporting Requirements and Forms**

- Spill Release and Reporting Procedure IGTS ENV-E-04
- Spill Report Form
- Hotline Alert Card

The site specific information must be updated during construction by the contractor as site conditions evolve. Prior to implementation this plan must be approved by the Iroquois Manager of Environmental, Health and Safety ("Mgr EH&S").

Sensitive Features

Groundwater resources underlying the sites are used by area residences for drinking water. There is also a wetland area south and east of the site.

Both IGTS and Contractor personnel are to be thoroughly familiar with this Plan and its contents prior to the construction of any IGTS pipeline facilities. The Plan will be followed to prevent or mitigate any releases which may occur.

## 1.1 PERSONAL SAFETY

Follow the safety practices that are detailed in the Site Specific Health and Safety Plan. *(Contractor will be required to provide a site specific health and safety plan prior to construction which must meet or exceed OSHA Regulations, Standard*

*Industry Practices and Iroquois EH&S procedures. A template will be provided to the contractor upon request).*

## 1.2 TRAINING

A spill prevention briefing will be scheduled and conducted by an Iroquois Environmental Inspector prior to starting site activities (Refer to Procedure No. ENV-B-02, Pre-Job Environmental Training). The topics to be addressed at the briefing will include the following:

- Sources of spills, such as equipment failure and malfunction.
- Precautionary measures to prevent spills.
- Standard operating procedures for spill response.
- Spill control and clean up equipment, materials, and supplies to be maintained by the construction or maintenance crew during the construction or maintenance related activity.

Equipment operators and equipment maintenance personnel will be properly trained on the operation and maintenance of their equipment to prevent the accidental discharge or spill of fuel, oil, or lubricants.

## 1.3 MATERIAL & WASTE INVENTORY

The Hazardous Substance Inventory (HSI) sheet in Attachment "A" provides an anticipated inventory of oils and hazardous substances to be utilized during construction activities which, if released, may pose a threat to human health or the environment. In addition, the HSI provides the Reportable Quantity (RQ) for each of these materials. Material Safety Data Sheets (MSDS) for each of these chemicals is presented in Attachment A following the HSI.

The List of Emergency Response Personnel will be completed by the Environmental Inspector (EI) prior to beginning work and updated as required during the project. The EI will work with Iroquois Environmental, Health & Safety Department to determine the (RQ)[2] for each material. The EI will also determine, in the event of a spill, the hazard classification under RCRA for each material.

Contract personnel will be familiarized with this Plan prior to initiating any on-site activities. Any materials brought to the site by contract crews will be inventoried, reported to the EI and managed in accordance with the guidelines in this Plan.

[2] RQ-s for specific constituents can be found from one or more of the following:
1) 49 Code of Federal Regulations Part 172;
2) 40 Code of Federal Regulations Part 302;
3) MSDS documents; or
4) Iroquois Procedures Manual in Attachment C and D.

## 2.0 SPILL PREVENTION PROCEDURES

The preferred alternative is to prevent spills from happening. The Iroquois Manager of EH&S or his designee will review and approve, prior to the commencement of work, all storage, refueling, and equipment maintenance areas in accordance with this SPCC Plan. The Environmental Inspector will mark, with appropriate signs, designated areas for:

- Storage of fuels, lubricants, oils, chemicals and hazardous materials
- Refueling of equipment
- Equipment maintenance

### 2.1 EQUIPMENT AND INSPECTION

The Contractor will develop and attach layout drawings or sketches in Attachment A indicating the designated areas described in Section 2.0, the materials stored there, the location of nearest spill kits and response equipment, and the distance to the nearest water body or conveyance (i.e. storm drains, ditches). The contractor will provide the site specific security plan for oil and hazardous material storage areas in Attachment A of this SPCC Plan. Hazardous and PCB contaminated wastes will be stored in a fenced and locked location. Fuel storage areas (including valves and switches) will be secured to minimize tampering and accidental releases by unauthorized personnel. The Contractor shall take the following precautions to ensure that a release of oil and hazardous substances is prevented or contained:

#### 2.1.1 Equipment Inspection, and Maintenance -

(1) All equipment maintenance will be performed in designated areas as specified within this SPCC.

(2) The supervisor of the construction or maintenance crew will develop a written schedule for inspection and maintenance of equipment.

(3) The supervisor of the construction or maintenance crew will provide a written description of equipment maintenance work to be performed to Iroquois Environmental, Health & Safety and Engineering Departments prior to commencing work.

(4) The equipment maintenance crew will assess the general condition of containers, valves, lines and hoses. All deteriorated parts will be promptly repaired or replaced.

(5) The equipment maintenance crew will take precautionary measures when performing equipment maintenance activities. e.g. Place absorbent pads (or equivalent equipment) on the

ground beneath the equipment when changing crankcase oil, repairing hydraulic lines, or adding coolant to construction equipment.

### 2.1.2 Containers

(1) All containers 55-gallons or greater shall be stored on pallets and surrounded with secondary containment.

(2) Secondary containment will include, but will not be limited to: temporary earthen berms with polyethylene underlining the entire contained area with a minimum of 10 mil thickness or a portable containment system constructed of steel, PVC or other suitable material.

(3) Containment areas shall be capable of containing 110% of the volume of material stored in these areas.

(4) All container storage areas shall be inspected daily for leaks and deterioration.

(5) Leaking and/or deteriorated containers shall be replaced as soon as the condition is first detected and cleanup measures will be implemented to remediate all contamination.

(6) No incompatible materials shall be stored in the same containment area.

(7) No storage area shall be unattended for periods longer than one (1) day.

### 2.1.3 Tanks

(1) The Contractor shall operate only those tanks for fuel and material storage which meet the requirements and regulations specified in the contract agreement and shall be surrounded with secondary containment.

(2) Self-supporting tanks shall be constructed of carbon steel or other materials compatible with the contents of each tank.

(3) All tanks will be elevated a minimum of two feet above grade and inspected daily for leaks and/or deterioration.

(4) Vehicle mounted tanks shall be equipped with flame/spark arrestors on vents to ensure that self ignition does not occur.

(5) Tanks will not be used to store incompatible materials in sequence unless first thoroughly decontaminated.

(6) Any tank utilized for storing different products between construction locations will be thoroughly decontaminated prior to refilling.

## 2.2 DESIGNATED STORAGE, REFUELING, AND EQUIPMENT AREAS

The Iroquois Manager of EH&S or his designee will review and approve all storage, refueling, and equipment maintenance areas prior to commencing work.

**The Iroquois Environmental, Health & Safety Department must be notified immediately if any of the setbacks or restrictions in Section 2.2 can not be achieved. Ultimately, per FERC requirements, exceptions to these setback or restrictions can only be granted by the Environmental Inspector, Government Authorities, and/or the FERC depending on the situation. Please refer to Part IV.A.1 (Preconstruction Planning) in the 2003 FERC Wetland and Waterbody Construction and Mitigation Procedures.**

### 2.2.1 Equipment Parking

(1) All equipment parked overnight shall be at least 100 feet from the edge of wetlands and watercourses.

### 2.2.2 Storage Areas for Hazardous Materials (i.e. Fuel, Lubricating Oils, and Chemicals)

(1) Shall be at least 100 feet from streambanks, wetland boundaries, wells, or springs.

(2) Shall be located at least 200 feet from private water supplies (wells or springs).

(3) Shall be located at least 400 feet from public water supplies (wells or springs)

(4) Shall be located outside of a wellhead protection zone.

### 2.2.3 Refueling and Maintenance Areas:

(1) Shall be located at least 100 feet from streambanks and wetland boundaries.

(2) Shall be located at least 200 feet from private water supplies (wells and springs).

(3) Shall be located at least 400 feet from public water supplies (wells or springs).

(4) Shall not be located within a wellhead protection zone.

(5) Shall not be located within a municipal watershed.

(6) Fuel trucks transporting fuel to on-site equipment shall only travel on approved access roads.

## 3.0 MITIGATIVE MEASURES

The construction or maintenance crew will have a readily accessible supply of containment and absorbent material capable of responding to a small spill. The recommended equipment and containment devices include the following, or equivalent:

- Dikes, berms, or retaining walls sufficiently impervious to contained spilled fluids.
- A quantity of absorbent and barrier materials determined by the contractor to be sufficient to capture the largest, reasonably foreseeable spill.
- A quantity of disposable drums (e.g. 55-gallon type) or containers suitable for handling and transporting contaminated materials.
- Curbing.
- Culverting, gutters, or other discharge systems.
- Weirs, booms, or other barriers.
- Spill diversion or retention ponds.
- Sumps and collection systems.

Construction vehicles and equipment shall carry appropriate spill containment equipment and materials (e.g., spill kits with the capacity of absorbing up to five gallons of liquid, weighing less than 10 pounds and can fit beneath the operator's seat on construction equipment).

All service vehicles used to transport lubricants and fuel must be equipped with an emergency response kit. At a minimum this kit must include:

- ten, 48"x3" oil socks,
- five, 17"x17"oil pillows,
- one, 10'x4" oil boom,
- twenty, 24"x24" oil mats,

- garden size, 6 mil, polyethylene bags,
- ten pair liquid proof gloves compatible with materials on site, and
- one, 55-gallon polyethylene open-head drum.

In addition, a smaller chemical response kit shall be available which contains:

- one bag of loose chemical pulp,
- two to three, 17"x 17" chemical pillows,
- two, 48"x3" chemical socks,
- five, 18"x18" adsorbent mats,
- garden size, 6 mil, polyethylene bags,
- ten pair liquid proof gloves compatible with materials on site,
- one, 30-gallon polyethylene open-head drum, and
- hazardous waste labels.

Finally, each refueling vehicle shall have a sufficient number of shovels, brooms, 10 mil polyethylene sheeting, and fire protection equipment to contain a moderate oil/fuel spill.

During refueling the CONTRACTOR will take appropriate measures to reduce the risk of a spill.

- Do not overfill tanks.
- Place absorbent materials under fuel nozzle while fueling equipment.
- Wipe fuel nozzle when fueling is complete.

The area beneath loading/unloading locations shall be inspected by the CONTRACTOR for spills before and after each use. Corrective measures shall be implemented if spills occur.

## 3.0 EMERGENCY RESPONSE PROCEDURES

This section provides a generic description of emergency response procedures to be performed to address oil and hazardous substance releases at the site. Each response will vary depending upon the nature and extent of the incident. However, the general protocols outlined in this document will be followed.

## 3.1 CONTRACTOR RESPONSIBILITIES

(1) The Contractor must designate both an Emergency Coordinator (EC) and an Alternate EC for the site.

(2) The Contractor is responsible for cleaning and addressing all spills which occur as a result of their operations.

(3) For small or “de minimis” spills (less than the Reportable Quantity), external notification requirements of this Plan need not be followed. However, this does not relieve the Contractor from correcting these releases in an environmentally sound manner.

(4) The Contractor shall supply necessary manpower and equipment to address releases resulting from their operations.

(5) The Contractor is responsible for immediately notifying the IGTS Chief Inspector of any spills.

## 3.2 IGTS RESPONSIBILITIES

(1) IGTS will designate both an Emergency Coordinator (EC) and an Alternate EC for the site.

(2) IGTS representatives shall be responsible for notifying appropriate agencies of releases in excess of RQ’s, including follow-up written notification.

(3) IGTS will provide supporting personnel and equipment to address RQ releases.

(4) IGTS shall be responsible for contracting outside remedial response firms and emergency response teams if their services are required.

## 3.3 EMERGENCY COORDINATOR AND CHAIN-OF-COMMAND

The IGTS Chief Inspector shall be designated as the Emergency Coordinator (EC) for the site. The Environmental Inspector, if applicable, shall assist the Chief Inspector as the Alternate EC. Table 2 (Attachment B of this SPCC Plan) provides a list of Iroquois and the Contractor's primary and alternate ECs for the locations, including their duties, home addresses and phone numbers. In addition, the table provides a list of the Contractor's employees who may be called upon to address small and contained releases as part of normal operating practices. This table must be completed by both IGTS and the CONTRACTOR.

## 3.4 PRE-DISTURBANCE REQUIREMENTS

The Environmental, Health & Safety Department will include the following information in the Environmental Clearance Package (refer to Procedure No. ENV-A-01):

(1) A list of approved spill response contractors in the vicinity of the work.

(2) A list of approved waste transporters and disposal sites for both hazardous and non-hazardous wastes.

Prior to commencing the work, the Environmental Inspector will:

(1) Prepare a written inventory of lubricants, fuels, and other materials that will be stored within the designated storage areas during the construction or maintenance related activity in Table 1 in Attachment A. Provide the MSDS for each material and include in Attachment A.

(2) Prepare the spill potential analysis summary as part of Table 1 in Attachment A.

(3) Contact the Environmental, Health & Safety Department to determine the reportable spill quantity for each material on the inventory.

(4) Determine, in the event of a spill, the hazard classification under RCRA for each material on the inventory. Refer to Procedure No. ENV-D-21.

(5) Prepare a list of the type, quantity, and location (including any designated storage sites or trailers) of containment and cleanup equipment to be available during the construction or maintenance related activity. The list

will include the procedures and mitigative measures to be used in case of a spill.

## 3.5 DUTIES OF CHIEF ENVIRONMENTAL INSPECTOR

The duties of the Chief Environmental Inspector or his Alternate are:

(1) Determine the source, character, amount and extent of the release or incident.

(2) Assess the potential hazards to the site, environment and neighboring community due to the incident, including possible toxic gases, hazardous runoff, etc.

(3) Sound an alarm and/or evacuation command to alert personnel, when required.

(4) Report releases to the IGTS Construction Project Manager, the Chief Environmental Inspector, or the spread assistant Chief EI.

(5) Contact outside remediation services or local emergency response teams to assist with incident or injuries too serious to be addressed by the contractor or IGTS personnel.

(6) Contact Local Emergency Planning Committees (LEPC) and neighboring industries, if necessary, for assistance or to report off-site releases.

(7) Commit manpower and equipment for minor incidents which can be reasonably corrected by IGTS and Contractor personnel.

(8) Direct remediation efforts to contain and control releases in accordance to this Plan.

(9) Document the remedial effort, including taking photographs wherever possible.

(10) Coordinate cleaning and disposal activities, including recovering usable products from the release.

(11) Ensure that all emergency equipment used during the incident is clean and fit for use prior to placing these devices back into service. Ensure that spent response equipment and materials are replaced when necessary.

(12) Generate a Spill Report Form.

(13) Where necessary, and with the assistance of IGTS Corporate Communications, inform local media of the incident.

# 4.0 EMERGENCY AND PERSONNEL PROTECTION EQUIPMENT

Table 3 (Attachment B of this SPCC Plan) provides a list of both Emergency Response and Personnel Protection Equipment located in the project area which can be used in the event of a major spill or fire. This table must be completed by the Contractor.

# 5.0 RELEASE NOTIFICATION PROCEDURES

The following section provides a generic description of the notification procedures to be followed in the event of a spill.

## 5.1 SPILL/RELEASE REPORTING PROCEDURES

Iroquois approved Spill/Release Reporting Procedure (ENV-E-04) is provided as Attachment D of this SPCC Plan and should be referred to and followed in the event of a spill/release.

Upon discovery of a spill, immediately:

(1) Stop operation of affected equipment.

(2) Close any open valves.

(3) Stop any leaks, if possible.

(4) Alert other personnel in the area to the occurrence of a spill.

(5) Notify appropriate personnel as soon as practicable.

(6) Internal Notifications

Oil spills and hazardous substance releases in excess of the RQ are to be immediately reported to the IGTS Construction Project manager, the spread manager, and the Chief EI.

A Spill Report Form (Attachment C of this SPCC Plan), will also be completed and forwarded to the VP of Engineering and Manager of EH&S as soon as technically feasible by the EC. The EC, with the assistance of the Manager of EH&S, will determine if the release constitutes a:

(1) Reportable Quantity under CERCLA,

(2) Reportable release under the Clean Water Act or RCRA, or

(3) Reportable Threshold Quantity under SARA Title III.

If reporting is necessary, the Manager of EH&S or his or her designee shall be responsible for immediately contacting the appropriate federal and state authorities.

## 5.2 EXTERNAL NOTIFICATIONS

All off-site releases of hazardous materials shall be reported verbally to the Local Emergency Planning Committee (LEPC) by Iroquois Manager of EH&S. In making a determination whether an off-site release has occurred, the EC and the Manager of EH&S will also consider all resulting air emissions. Names, addresses, and phone numbers of the appropriate LEPC parties are provide below:

**Name:** _____

**Organization:** _____

**Phone Number:** _____

The Chief EI is responsible for making follow-up written notification to the LEPC.

## 5.3 Emergency Response Contractors

The Manager, EH&S or his designee is responsible for getting an emergency response cleanup contractor. Iroquois Chief EI will oversee any cleanup and will determine when and if the cleanup is complete.

### 5.4 Local Emergency Response Teams

The Chief Inspector may also call on the following local emergency response teams should their assistance be required:

| | Organization Name | Telephone Number |
|---|---|---|
| Emergency Medical Services | | |
| Ambulance: | | |
| Hospital: | | |
| Fire Department: | | |
| Police or Sheriff's Department: | | |

## 6.0 CLEAN-UP PROCEDURES

The following section outlines specific procedures to be followed by the CONTRACTOR and IGTS when addressing releases.

## 6.1 OIL/FUEL SPILLS

(1) Small spills and leaks must be remediated as soon as feasible. Use adsorbent pads wherever possible to reduce the amount of contaminated articles.

- The Environmental Inspector will determine if the spill is small enough that it can be safely handled by the construction or maintenance crew.
- The crew will utilize on-site equipment to pump and/or excavate the spilled material and contaminated soil.
- If the spill is too large to be safely handled by the construction or maintenance crew, an approved spill response contractor will be called in to clean up the spill.

(2) Restrict spills to the containment area if possible by stopping or diverting flow from the oil/fuel tank.

- All spills shall be contained on the right-of-way or in designated equipment storage areas, if possible.
- If on water, deploy a spill boom across the flow direction of the floating material.
- If on land, install a dike, berm, or other containment structure across the flow direction to contain the spilled material.
- Immediately obtain a copy of the MSDS for the material spilled.

(3) If the release exceeds the containment system capacity, immediately construct additional containment using sandbags or fill material. Every effort must be made to prevent the seepage of oil into soils and waterways.

(4) Once a spill is contained, cleanup procedures will begin immediately.

Small Spills

a) The IGTS Environmental Inspector will determine if the spill is small enough that it can be safely handled by the construction or maintenance crew.

b) The crew will utilize on-site equipment to pump and/or excavate the spilled material and contaminated soil.

Large Spills

a) If the spill is too large to be safely handled by the construction or maintenance crew, an approved spill response contractor (from the list in the Environmental Clearance Package) will be called in to clean up the spill.

(5) Decontaminate the equipment used during the containment and cleanup operation (e.g., use rags and cleaning agents to remove excess spill material). If the equipment cannot be properly cleaned it will be treated as a waste.

(6) All spilled material, contaminated soil, absorbent material, and other contaminated material will be containerized in a manner consistent with the spilled material's hazard characterization.

(7) If a release occurs into a facility drain or nearby stream, immediately pump any floating layer into drums. For streams, place a barrier between the release area and the site boundary. This barrier may include but is not limited to oil booms, hay bales, under flow dams or

means to contain the release. As soon as possible, excavate contaminated soils and sediments.

(8) After all recoverable oil has been collected and drummed, place contaminated soils and articles in containers if required by the Iroquois representative or regulations.

(9) For larger quantity of soils, construct temporary waste piles using plastic liners. Plastic-lined roll-off bins should be leased for storing this material as soon as feasible.

(10) Dispose of oily soils and contaminated articles in accordance with applicable federal, state and local regulations.

(11) Decontaminate all emergency response equipment used during the incident before storing. See part 6.4 of this Plan.

(12) Document and report activities to the Director of EH&S.

## 6.2 HAZARDOUS SUBSTANCE RELEASES

(1) Identify the material and quantity released.

(2) Block off drains and containment areas to limit the extent of the spill. Never use water to disperse the spill.

(3) Ensure that Personnel Protection Equipment and containers are compatible with the material released.

(4) Collect and reclaim, if possible, as much of the spill using a hand pump or similar device. Containerize contaminated soils. Never place incompatible materials in the same drum or other container.

(5) Take a sample of the substance for analysis and waste profiling. Contact the Director of EH&S (See Attachment B of this SPCC Plan) for scheduling analytical work.

(6) Place a hazardous waste label with appropriate waste code on the drums containing hazardous waste contaminated materials. Move drum to secure staging or storage area.

(7) Decontaminate all equipment in a contained area. Collect and containerize decontamination fluids. See part 6.4 of this Plan.

(8) Document and report activities to the Director of EH&S as soon as feasible.

## 6.3 EQUIPMENT CLEANING/STORAGE

(1) Upon completion of remedial activities, the Contractor shall be responsible for disposing and/or decontaminating emergency response equipment. An approved waste management plan must be followed. See Attachment C of this SPCC Plan for a blank Waste Management Plan form (The contractor will be responsible for providing and filling out the information in this plan).

(2) The Contractor shall be responsible for replacing all spent emergency response equipment prior to resuming construction activities.

(3) Decontamination rinse fluids shall be collected and managed in the same manner as wastes generated, including performing necessary analyses.

(4) Reusable personnel protection equipment will be tested and inventoried prior to being placed back into service.

## 6.4 DISPOSAL OF CONTAMINATED MATERIALS/SOILS

(1) The Contractor shall be responsible for the proper disposal of wastes generated by their actions, including obtaining applicable authorizations, registrations, and/or EPA/State I.D. Numbers. An approved waste management plan must be followed. See Attachment C of this SPCC for a blank Waste Management Plan form (The contractor will be responsible for providing and filling out the information in this plan).

(2) All contaminated articles and soils recovered during a release event shall be properly handled and stored in approved DOT containers.

(3) In accordance to the Company's policy, all wastes generated as a result of spill response activities shall be analyzed to determine if hazardous, unless knowledge of contaminant(s) is applied to classify these wastes/spill materials as hazardous.

(4) Those wastes determined to be hazardous shall be properly labeled, profiled and manifested to an authorized hazardous waste treatment, storage, and disposal facility.

(5) IGTS may utilize a remediation firm or a waste management firm to initiate waste disposal activities. At no time will hazardous waste be stored on-site for a period exceeding 90 days.

(6) Hazardous wastes shall be stored in a secured location (i.e. fenced, locked, etc) until such time as this material is transported off-site. At no time will hazardous waste be stored for a period exceeding 90 days.

(7) Non-hazardous, oil-contaminated soils and articles shall be properly disposed at authorized non-hazardous land disposal facilities. While on-site, these materials will be managed in accordance with the procedures outlined previously, and with applicable federal, state and local regulations.

(8) Depending upon quantity, lined roll-off bins shall be leased to temporarily store contaminated soils prior to disposal.

# ATTACHMENT A

## TABLE 1: HAZARDOUS SUBSTANCE INVENTORY

| Material | Quantity (gallons) | Storage Location | Reportable Quantity (include reference) |
|---|---|---|---|
| **Oil/Fuel:** | | | |
| **Fuel Oil** | | | |
| **Motor Oil** | | | |
| | | | |
| | | | |
| **Commercial Chemicals:** | | | |
| **None** | | | |
| | | | |
| | | | |
| | | | |
| | | | |
| | | | |
| **Hazardous Wastes:** | | | |
| **None** | | | |
| | | | |
| | | | |
| | | | |
| | | | |

# MATERIAL SAFETY DATA SHEETS

# DESIGNATED AREAS FOR PARKING, REFUELING, AND STORAGE

# SITE-SPECIFIC SECURITY PLANS

# ATTACHMENT B

## TABLE 2: LIST OF EMERGENCY RESPONSE PERSONNEL

| Name | Job Description | Address | Phone Number |
|---|---|---|---|
| **EMERGENCY COORDINATOR** | | | |
| **IGTS:** | | | |
| | | | |
| | | | |
| **CONTRACTOR:** | | | |
| | | | |
| | | | |
| **ALTERNATIVE EMERGENCY COORDINATOR** | | | |
| **IGTS:** | | | |
| | | | |
| | | | |
| **CONTRACTOR:** | | | |
| | | | |
| | | | |
| **EMERGENCY RESPONSE PERSONNEL** | | | |
| | | | |
| | | | |
| | | | |
| | | | |
| | | | |

## TABLE 3: EMERGENCY RESPONSE AND PERSONNEL PROTECTION EQUIPMENT

| Equipment | Quantity | Location |
|---|---|---|
| **SPILL RESPONSE EQUIPMENT:** | | |
| Emergency Spill Response Kit | | On Fuel Truck |
| Chemical Response Kit | | In Storage Trailer |
| | | |
| | | |
| | | |
| **FIRE PROTECTION EQUIPMENT:** | | |
| Fire Extinguishers | | On Welding Rigs |
| Fire Extinguishers Trailers | | In Office and Storage |
| | | |
| **PERSONNEL PROTECTION EQUIPMENT:** | | |
| Hard Hats | | Individual Issue |
| Safety Glasses | | Individual Issue |
| Rubber Gloves | | In Chemical Response Kit |
| Tyvek Suits | | In Chemical Response Kit |
| | | |

THIS PAGE TO BE COMPLETED BY CONTRACTOR

:

## ENVIRONMENTAL ASSISTANCE CONTACT SHEET

| Name/Location: | Phone Numbers | | |
|---|---|---|---|
| District Manager/Address: | | | |
| | | | |
| | | | |
| | | | |
| District Supervisor/Address: | | | |
| | | | |
| **Corporate Contacts:** | | | |
| ***Environmental Affairs*** | | | |
| | | | |
| | | | |
| | Office: | Home: | Beeper/Car: |
| | Office: | Home: | Beeper/Car: |
| | Office: | Home: | Beeper/Car: |
| IF IT IS NOT POSSIBLE TO LOCATE ANY OF THE ABOVE, CALL GAS CONTROL AT 203-944-7040 FOR ASSISTANCE IN LOCATING THE ABOVE INDIVIDUALS. | | | |

Last Revised:

# ATTACHMENT C

# WASTE SPECIFIC MANAGEMENT PLAN

# SPILL REPORT FORM

SPILL REPORT FORM IROQUOIS GAS TRANSMISSION SYSTEM

Date:_____ Time of Spill Occurrence: _____ Weather Conditions _____

Name/Title of first observer: _____

Location of Spill:

_____

_____

Type and source of material spilled: _____

_____

Estimated Quantity Spilled:

_____

Circumstances causing spill:

_____

If spill is into water, is a sheen present

_____

Approximate size of area affected by spill:

_____

_____

Has spill left Company property? _____

_____

Is spill under control? If not, is there a potential for the spill to leave the Company property?

_____

_____

_____

Time that spill cleanup was initiated. Methods used for cleanup.

_____

_____

_____

_____

_____

**SPILL REPORT FORM (continued)**

Personnel notified (names, phone numbers, date and time, including regulatory representatives, if appropriate)

Iroquois Environmental Department:_____

NYSDEC (1-800-457-7632):_____

NRC (1-800-424-8802): _____

Emergency Responders required (if yes, list name of responders called):_____

_____

Name and phone number of Emergency Coordinator:_____

_____

Comments:_____

_____

_____

_____

Spill Report sent to:

Iroquois Environmental Department:_____ Date: _____

Other (list) _____ Date: _____

_____ Date: _____

Signature of Emergency Coordinator/Date:

_____

_____

# ATTACHMENT D

Iroquois
GAS TRANSMISSION SYSTEM
IROQUOIS PIPELINE OPERATING COMPANY, OPERATOR

# Environmental Procedure Manual

| Date | Sheet | of | Procedure No. | Revision |
|---|---|---|---|---|
| 10/01/2004 | 1 | 12 | ENV-E-04 | 5 |

Subject:

SPILL/RELEASE REPORTING PROCEDURE

## 1.0 INTRODUCTION

This document outlines the reporting procedures to be undertaken in the event of a spill or release of chemicals or petroleum product from any Iroquois facility or right-of-way.

This document is intended for use by field personnel performing operation and maintenance activities on the Iroquois pipeline, and at compressor stations, odorant stations, meter stations, or along the pipeline right-of-way. It outlines procedures for documenting important information about releases in the field and reporting that information to Iroquois Environmental and Right-of-Way personnel. It is also for use by office personnel performing environmental, engineering or management activities associated with spill reporting to agencies, landowners and other non-Iroquois personnel.

## 2.0 PERSONAL SAFETY

Follow the safety practices that are outlined in the Safety and Health Manual for hazardous material handling and storage and the Material Safety Data Sheet (MSDS) for the product spilled or released.

## 3.0 NOTIFICATIONS

Various internal, local, state and federal notifications may be required as described in Section 6 of this procedure.

## 4.0 EQUIPMENT AND MATERIALS NEEDED

A Spill Report Form is attached to this procedure. Equipment to measure and sketch the release area should be available as well as Material Safety Data Sheets for all chemical or petroleum products.

Prepared by RES

Compliance Coordinator

Manager, Environmental, Health & Safety

Engineering Representative

Iroquois
GAS TRANSMISSION SYSTEM
IROQUOIS PIPELINE OPERATING COMPANY, OPERATOR

**Environmental Procedure Manual**

| Date | Sheet | of | Procedure No. | Revision |
|---|---|---|---|---|
| 10/01/2004 | 2 | 12 | ENV-E-04 | 5 |

Subject:

SPILL/RELEASE REPORTING PROCEDURE

## 5.0 REFERENCES

| Company Name | Document Name | Document Number |
|---|---|---|
| IPOC | *Emergency Operating Procedures Manual (EOP)* | Appendix E |
| IPOC | *Safety and Health Manual* | NA |
| IPOC | *Spill Prevention, Containment, and Control Procedures for Pipeline Construction & Operation* | ENV-E-01 |
| IPOC | *Emergency Preparedness Procedures and Spill Prevention, Control and Countermeasures Plan – Wright Meter Station & Compressor* | ENV-E-07 |
| IPOC | *Emergency Preparedness Procedures and Spill Prevention, Control and Countermeasures Plan – Croghan Meter Station & Compressor* | ENV-E-08 |
| IPOC | *Emergency Preparedness Procedures and Spill Prevention, Control and Countermeasures Plan – Athens Compressor Station* | ENV-E-10 |
| IPOC | *Spill Response Plan and Spill Prevention, Control and Countermeasures Plan Preparation and Update* | ENV-E-13 |
| IPOC | *Emergency Preparedness Procedures and Spill Prevention, Control and Countermeasures Plan – Boonville Compressor* | ENV-E-16 |
| IPOC | *Emergency Preparedness Procedures and Spill Prevention, Control and Countermeasures Plan – Dover Compressor* | ENV-E-17 |
| NYSR | *Regulation List of Hazardous Substances* | 6NYCRR |
| USEPA | *Designation, Reportable Quantities and Notification* | 40 CFR 302 |
| USEPA | *Immediate Notice of Certain Hazardous Material Incident* | 49 CFR 171.15 |

## 6.0 INSTRUCTIONS

### 6.1 Notification Responsibilities

Each facility has their own unique Spill Prevention, Control and Countermeasures Plan (SPCC), refer to the appropriate facility's Plan for detailed information.

Any Iroquois or contractor employee who observes a spill or release to the environment must notify the Emergency Spill Coordinator who will then notify Gas Control and initiate the notification tree found in the Emergency Operating Procedure Manual, Appendix E.

Follow this procedure for any spill or release of any chemical or petroleum product regardless of its quantity or location. Verbal notifications will be made either in person, by telephone or by radio. Releases may include, but are not limited to, acids, cleaners, contaminated water or condensation, fuels, lubricants, mercury, methanol, paints or solvents.

### 6.2 Internal and Landowner Notifications

Responsibilities and steps for ensuring adequate internal and landowner notifications are outlined in the following sequence. External agency notifications are discussed in subsequent sections.

Any Iroquois or contractor employee who first observes a spill or release to the environment must notify immediately the Emergency Spill Coordinator.

1. If the Emergency Spill Coordinator or designee is not available, then notification will be made to the next highest level until notification has been made. In any case, the Manager, Environmental, Health & Safety or his or her designee will be the only person to determine if a release is reportable to outside agencies and to notify environmental agencies. The Right-of-Way Department will notify landowners if appropriate.
2. The person notifying the Manager, Environmental, Health & Safety and the Manager, Right-of-Way will also fax or deliver a completed Spill Report Form (see attached) to each of these people. If this is not possible immediately, contact the Manager, Environmental, Health & Safety and Manager, Right-of-Way and provide as much of the information requested on the Spill Report Form as possible.
3. The person notifying the Manager, Environmental, Health & Safety and Manager, Right-of-Way will ensure that a copy of the Material Safety Data

Sheet (MSDS) for the released material, and a sketch of the release area, are attached to the Spill Report Form.

## 6.3 Agency Notifications and Deadlines

The following subsections describe verbal and written notification requirements for various types and quantities of releases in Connecticut and New York State. In addition to the environmental agency requirements tabulated below, contact local police, fire or emergency officials if a threat of fire, explosion or other danger to the public is involved, especially near sensitive areas such as schools, hospitals, nursing homes, shopping centers, busy roadways or apartment buildings.

Hazardous substance releases listed in 40 CFR Part 302 (and 6 NYCRR Part 597 in New York State) also require contacting Local Emergency Planning Committees (LEPCs). Since the pipeline crosses many localities in Connecticut and New York State, and since LEPC contacts change frequently, these are not listed in this procedure. If needed, the State Emergency Response Commissions (SERCs) listed in the tables can provide current LEPC contact information.

### 6.3.1 Connecticut Release Reporting

| Released Material | Media Affected | Amount | Verbal Deadline | Written Report Deadline | Notification Codes |
|---|---|---|---|---|---|
| Oil or other petroleum | Water | Any | Immediate | 48 hours | A |
| | | An amount that causes a visible film/sheen; or causes violation of water quality standards; or causes formation of sludge or emulsion | Immediate | N/A | B |
| | | 1,000 gallons or more in one spill event or 2 or more smaller spill events in any 12 month period | N/A | 30 days[1] | E |
| | Soil or gravel | Any | Immediate | 48 hours | A |
| | Contained spills indoors or outdoors | A spill greater than a pint in volume | Immediate | 48 hours | A |
| | Contained spills indoors or outdoors | A spill less than a pint in volume shall not be reported provided it does not contaminate soil or gravel or enter into water. | N/A | N/A | N/A |
| Other Chemicals or Products | Soil, Water or Air | Any | Immediate | 48 hours | A |
| | Contained spills indoors or outdoors | Any | Immediate | 48 hours | A |
| Hazardous Substances (including Hazardous Wastes) listed in CERCLA 40 CFR 302 (See Section 6.3.3) | Soil or Water | An amount equal or exceeding the substances assigned reportable quantity | Immediate | 48 hours (except no written report is required by the National Response Center) | A, B, C, D |
| Hazardous Materials or Wastes During Transport | Any media or spill location | Any incident causing the damage or injuries specified in 49 CFR 171.15[2] | Immediate | 30 Days[3] (report submitted to the USDOT) | B |

Iroquois
GAS TRANSMISSION SYSTEM
IROQUOIS PIPELINE OPERATING COMPANY, OPERATOR

# Environmental Procedure Manual

| Date | Sheet | of | Procedure No. | Revision |
|---|---|---|---|---|
| 10/01/2004 | 6 | 12 | ENV-E-04 | 5 |

Subject:

SPILL/RELEASE REPORTING PROCEDURE

**Note: The Environmental, Health & Safety Department will notify agencies during working hours. The Environmental, Health & Safety Department will also forward written reports to agencies.**

**Notification Codes**

A. Connecticut Department of Environmental Protection
Oil and Chemical Spill Response Division
State Office Building
79 Elm Street
Hartford, CT 06106-5127
Phone: (860) 424-3338

B. National Response Center
Phone: (800) 424-8802

C. Local Emergency Planning Committee (LEPC)
To obtain information on a specific area of the pipeline, contact the State Emergency Response Commission to determine the LEPC and contact information in your area.

D. Connecticut State Emergency Response Commission
State Office Building, Room 146
165 Capitol Avenue
Hartford, CT 06106
Phone: (860) 424-3338Regional Administrator

E. USEPA – Region 1
1 Congress Street
Suite 1100
Boston, MA 02114-2023
Phone: (617) 918-1111

### 6.3.2 New York State Release Reporting

| Released Material | Media Affected | Amount | Verbal Deadline | Written Report Deadline | Notification Codes |
|---|---|---|---|---|---|
| Oil or other petroleum | Water | An amount that causes a visible film/sheen; or causes violation of water quality standards; or causes formation of sludge or emulsion | Immediate | N/A | A, B |
| | | 1,000 gallons or more in one spill event or 2 or more smaller spill events in any 12 month period | N/A | 30 days[4] | E |
| | Soil or gravel | Any | 2 hours | 48 hours | A |
| | Contained spills indoors or outdoors | Small spills do not need to be reported unless they contaminate soil, gravel or water. | NA | NA | NA |
| Hazardous Substances (including Hazardous Wastes) listed in CERCLA 40 CFR Part 302 (See Section 6.3.3) | Soil or Water | An amount equal or exceeding the substances assigned reportable quantity | Immediate | ASAP (except no written report is required by the National Response Center) | A, B, C, D |

Iroquois
GAS TRANSMISSION SYSTEM
IROQUOIS PIPELINE OPERATING COMPANY, OPERATOR

# Environmental Procedure Manual

| Date | Sheet | of | Procedure No. | Revision |
|---|---|---|---|---|
| 10/01/2004 | 8 | 12 | ENV-E-04 | 5 |

Subject:

SPILL/RELEASE REPORTING PROCEDURE

| Released Material | Media Affected | Amount | Verbal Deadline | Written Report Deadline | Notification Codes |
|---|---|---|---|---|---|
| Hazardous Substances listed in 6 NYCRR 597 (See Section 6.3.3) (Note: New York State has published a list of hazardous substances that differs from the EPA list found in 40 CFR Part 302.) | Soil, Water or Air | An amount equal or exceeding the substances assigned reportable quantity | Immediate | N/A | A |
| Hazardous Materials or Wastes During Transport | Any media or spill location | Any incident causing the damage or injuries specified in 49 CFR 171.15[5] | Immediate | 30 Days[6] (report submitted to the USDOT) | B |

**Note: The Environmental, Health & Safety Department will notify agencies. The Environmental, Health & Safety Department will also forward written reports to agencies.**

**Notification Codes**

A. New York State Department of Environmental Conservation
24-hour Spill Hotline
(800) 457-7362 or (518) 457-7362

B. National Response Center: (800) 424-8802

C. Local Emergency Planning Committee (LEPC)
To obtain information on a specific area of the pipeline, contact the State Emergency Response Commission to determine the LEPC and contact information in your area.

D. New York State Emergency Response Commission
1220 Washington Street
Building 22, Suite 101
Albany, NY 12226-9930
Phone: (800) 572-1700

E. Regional Administrator
USEPA – Region 2
290 Broadway
New York, NY 10007-1866
Phone: (212) 637-3000

### 6.3.3 Reportable Quantities

Releases of reportable quantities (RQs) of hazardous substances must be reported as tabulated in Sections 6.3.1 and 6.3.2 of this procedure. Any amount of a hazardous substance is a reportable quantity if released to the environment in Connecticut. Federal and New York State regulations list RQs for hundreds of substances. To determine whether a release is reportable, the Environmental, Health & Safety Department will refer to these lists and other information provided on the Spill Report Form. Reportability of New York State releases is to be determined based on the most stringent reportable quantity listed by New York State (6 NYCRR 597) or by the US Environmental Protection Agency (40 CFR 302 under the Comprehensive Environmental Response, Compensation, and Liability Act). RQs represent an amount released within 24 hours. The New York State list is often much more stringent than the EPA list, especially for releases to water.

The following table lists examples of RQs for several common substances. If it is necessary to determine the pounds of material released, multiply the volume released (gallons) by its density (pounds per gallon) listed in its Material Safety Data Sheet (MSDS).

| | Reportable Quantity (Pounds) | | |
|---|---|---|---|
| State | Connecticut | New York | |
| Environmental Media | Air/Land/Water | Air/Land | Water |
| **Hazardous Substance** | | | |
| Benzene (Solvents or Paint Thinner) | ANY | 10 | 1 |
| Ethylene Glycol (not Propylene Glycol) | | 1 | 1 |
| Hydrochloric Acid | | 5,000 | 100 |
| Mercury | | 1 | 1 |
| Methanol | | 5,000 | 1 |
| Methyl Ethyl Ketone | | 5,000 | 1 |
| Polychlorinated Biphenyls (PCBs) | | 1 | 1 |
| Sulfuric Acid | | 1,000 | 100 |
| Toluene or Xylene (Solvents or Paint Thinner) | | 1,000 | 1 |

## 7.0 DOCUMENTATION/REPORTING

Complete a Spill Report Form (see attached). Any follow-up written report to an agency may include an updated Spill Report Form, a sketch or photograph of the release area and an MSDS for the material released. Written information concerning any spills must be kept in the applicable SRP/SPCC Plan (ENV-E-13).

## 8.0 TRAINING

All personnel responsible for spill/release reporting must be trained to ensure compliance with this procedure. Iroquois Environmental Procedures ENV-B-01 and ENV-B-02 prescribe Annual Environmental Training and Pre-Job Environmental Training, respectively. Those procedures address spill/release reporting training.

---

[1] The following must be reported in writing to the USEPA Regional Administrator:

- Company name;
- Name of the owner/operator of the location;
- Location of the release;
- Date and year of initial facility operation;

- Maximum storage or handling capacity of the facility and normal daily throughput;
- Description of the facility, including maps, flow diagrams and topographic maps;
- A complete copy of the facility's SPCC Plan with any amendments;
- The cause(s) of such spill, include a failure analysis of system or subsystem in which failure occurred;
- The corrective actions and/or countermeasures taken, including adequate description of equipment repairs and/or replacements;
- Additional preventative measures taken or contemplated to minimize the possibility of reoccurrence; and
- Such information as the Regional Administrator may require pertinent to the plan or spill event.

[2] Any incident that occurs during the course of transportation (including loading, unloading and temporary storage) in which:

1) As a direct result of hazardous materials –
   a) A person is killed; or
   b) A person receives injuries requiring his or her hospitalization; or
   c) Estimated carrier or other property damage exceeds $50,000; or
   d) An evacuation of the general public occurs lasting one or more hours; or
   e) One or more major transportation arteries or facilities are closed or shut down for one hour or more; or
   f) The operational flight pattern or routine of an aircraft is altered; or
2) Fire, breakage, spillage, or suspected radioactive contamination occurs involving shipment of radioactive material; or
3) Fire, breakage, spillage, or suspected contamination occurs involving shipment of infectious substances (etiologic agents); or
4) There has been a release of a marine pollutant in a quantity exceeding 450 L (119 gallons) for liquids or 400 kg (882 pounds) or solids; or
5) A situation exists of such a nature (e.g., a continuing danger to life exists at the scene of the incident) that, in the judgment of the carrier, it should be reported to the National Response Center even though it does not meet the criteria in items 1, 2, or 3 above.

[3] Written reports to the US Department of Transportation must be made on DOT Form F 5800.1

[4] The following must be reported in writing to the USEPA Regional Administrator:

- Company name;
- Name of the owner/operator of the location;
- Location of the release;
- Date and year of initial facility operation;
- Maximum storage or handling capacity of the facility and normal daily throughput;
- Description of the facility, including maps, flow diagrams and topographic maps;
- A complete copy of the facility's SPCC Plan with any amendments;
- The cause(s) of such spill, include a failure analysis of system or subsystem in which failure occurred;
- The corrective actions and/or countermeasures taken, including adequate description of equipment repairs and/or replacements;
- Additional preventative measures taken or contemplated to minimize the possibility of reoccurrence; and

- Such information as the Regional Administrator may require pertinent to the plan or spill event.

[5] Any incident that occurs during the course of transportation (including loading, unloading and temporary storage) in which:

6) As a direct result of hazardous materials –
   a) A person is killed; or
   b) A person receives injuries requiring his or her hospitalization; or
   c) Estimated carrier or other property damage exceeds $50,000; or
   d) An evacuation of the general public occurs lasting one or more hours; or
   e) One or more major transportation arteries or facilities are closed or shut down for one hour or more; or
   f) The operational flight pattern or routine of an aircraft is altered; or
7) Fire, breakage, spillage, or suspected radioactive contamination occurs involving shipment of radioactive material; or
8) Fire, breakage, spillage, or suspected contamination occurs involving shipment of infectious substances (etiologic agents); or
9) There has been a release of a marine pollutant in a quantity exceeding 450 L (119 gallons) for liquids or 400 kg (882 pounds) or solids; or
10) A situation exists of such a nature (e.g., a continuing danger to life exists at the scene of the incident) that, in the judgment of the carrier, it should be reported to the National Response Center even though it does not meet the criteria in items 1, 2, or 3 above.

[6] Written reports to the US Department of Transportation must be made on DOT Form F 5800.1